Catalogue constant velocity joints
2010-2011

СОДЕРЖАНИЕ

TECHNICAL SPECIFICATIONS 5-17
AXELSHAFT 18-19
DRIVESHAFT 20-21
AUDI 22-28
BMW 29-29
CHEVROLET 30-30
CHRYSLER 30-30
CITROËN 30-30
DAEWOO 31-31
DAIHATSU 32-36
FIAT 37-38
FORD 39-39
HONDA 40-51
HYUNDAI 52-53
ISUZU 54-56
KIA 57-57
LAND ROVER 58-58
MAZDA 59-68
MERCEDES 69-69
MITSUBISHI 70-78
NISSAN 79-93
OPEL 94-96
PEGEOT 97-98
RUS 99-99
SAAB 99-99
SEAT 100-101
SKODA 102-104
SUBARU 105-109
SUZUKI 110-118
TOYOTA 119-133
VOLKSWAGEN 134-144
VOLVO 145-146
DRIVE SHAFT 147-152
C.V. JOINT OUTER 153-201
C.V. JOINT INNER 202-226
BOOTS 227-230

ASVA NUMBERING SYSTEM

CVJ OUTER	TY	5 1	A	48	TEETH OF ABS RING
CVJ INNER	TYI#	5 001			WITH ABS
DRIVESHAFT	TYXD	909			REFERENCE №
SHAFT	TYS	01			
BOOT	ASBT	90			

A - TEETH OF INNER SPLINE
B - SEAL DIAMETER
C - TEETH OF OUTER SPLINE

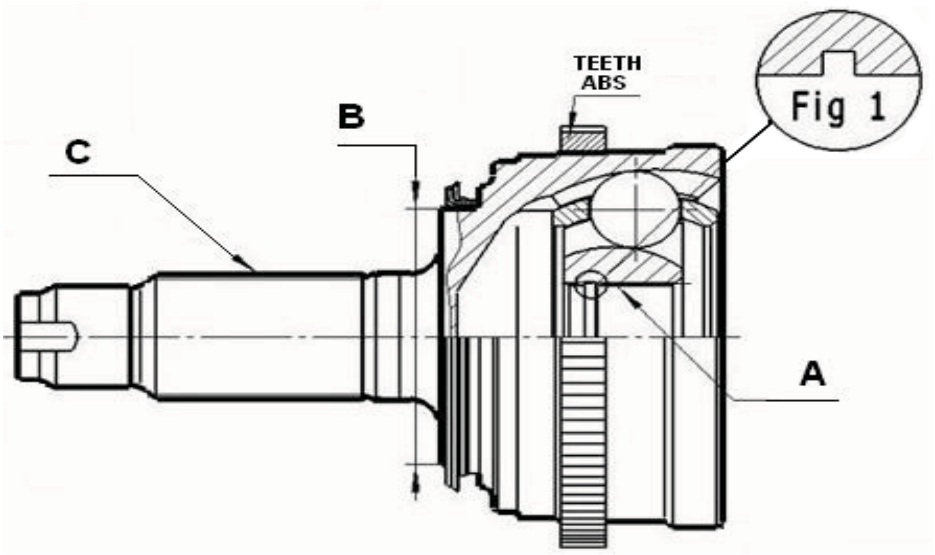

MAKER	
AD	AUDI
BX	BMW
CH	CHEVROLET
PG	CITROEN
DW/GM	DAEWOO
DH	DAIHATSU
FT	FIAT
FD	FORD
HN	HONDA
HY	HYUNDAI
ISZ	ISUZU
KA	KIA
LD	LADA
LR	LAND ROVER
MZ	MAZDA
ME	MERCEDES
MT	MITSUBISHI
MK	MOSKVICH
NS	NISSAN
OK	OKA
OP	OPEL
PG	PEUGEOT
RN	RENAULT
SA	SAAB
SK	SKODA
SB	SUBARU
SZ	SUZUKI
TY	TOYOTA
VW	VOLKSWAGEN
VO	VOLVO

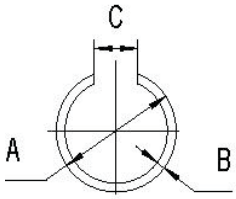

WD

Wire Design Cir Clip-WD				
ASVA NUMBER	**A**	**B**	**C**	**D**
WD-21514	21.5	1.4	10	
WD-23014	23	1.4	10	
WD-23016	23	1.6	10	
WD-23514	23.5	1.4	10	
WD-23516	23.5	1.6	10	
WD-23518	23.5	1.8	10	
WD-24516	24.5	1.6	10	
WD-24518	24.5	1.8	10	
WD-24520	24.5	2	10	
WD-25514	25.5	1.4	10	
WD-25516	25.5	1.6	10	
WD-25518	25.5	1.8	10	
WD-26014	26	1.4	10	
WD-26016	26	1.6	10	
WD-26018	26	1.8	10	
WD-26020	26	2	10	
WD-26516	26.5	1.6	10	
WD-26518	26.5	1.8	10	
WD-26520	26.5	2	10	
WD-27014	27	1.4	10	
WD-27016	27	1.6	10	
WD-27516	27.5	1.6	10	
WD-27518	27.5	1.8	10	

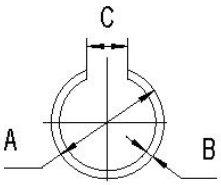

WD

Wire Design Cir Clip-WD				
ASVA NUMBER	**A**	**B**	**C**	**D**
WD-28016	28	1.6	10	
WD-28018	28	1.8	10	
WD-28516	28.5	1.6	10	
WD-28518	28.5	1.8	10	
WD-29016	29	1.6	10	
WD-29018	29	1.8	10	
WD-29520	29.5	2	10	
WD-30016	30	1.6	10	
WD-30018	30	1.8	10	
WD-30518	30.5	1.8	10	
WD-31018	31	1.8	10	
WD-31518	31.5	1.8	10	
WD-32020	32	2	10	
WD-36520	36.5	2	10	
WD-58018	58	1.8	13	
WD-63020	63	2	13	
WD-70020	70	2	13	

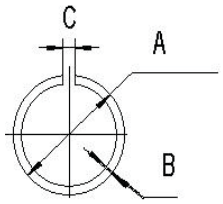

FD

Flat Design Cir Clip-FD				
ASVA NUMBER	**A**	**B**	**C**	**D**
FD-13810	13.8	1	3	
FD-14510	14.5	1	3	
FD-15012	15	1.2	3	
FD-15512	15.5	1.2	3	
FD-16512	16.5	1.2	3	
FD-17012	17	1.2	3	
FD-17510	17.5	1	3	
FD-18512	18.5	1.2	3	
FD-20512	20.5	1.2	3	

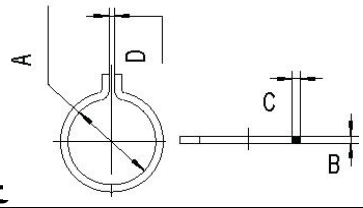

RC

Rectangular Cir Clip-RC				
ASVA NUMBER	**A**	**B**	**C**	**D**
RC-20015	20	8/16/10	39203	39203
RC-21516	21.5	39234	39234	39203
RC-22015	22	39203	39203	39203
RC-24016	24	39234	39234	39203
RC-24515	24.5	39203	39234	39203
RC-24516	25.5	39234	39203	39203
RC-27020	27	2	2	39203

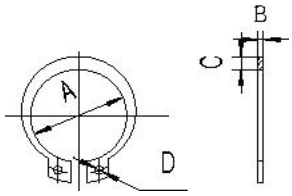

CC

Cir Clip-CC				
ASVA NUMBER	**A**	**B**	**C**	**D**
CC-17510	39219	1	17564	2
CC-18510	39220	1	24869	2
CC-19510	39221	1	24869	2
CC-20510	39222	1	24869	2
CC-21512	39223	39114	11749	2
CC-22212	39135	39114	11749	2
CC-23212	39136	39114	11749	2
CC-24212	39137	39114	11749	2
CC-25012	25	39114	39236	2
CC-25912	39350	39114	39236	2
CC-26912	39351	39114	26359	2
CC-27912	39352	39114	26359	2

№	ASVA	HDK	METELLI	GLO	GKN	LOEBRO	CV Boot	Teeth of inner spline	Seal diameter	Teeth of outer spline	Diameter of gaps	Teeth of ABS ring
CVJ OUTER												
AUDI												
1	**AD-002**		15-1025	3073	0,020271	302149	ASBT-167	25	56.5	26		
2	**AD-003**		15-1050	3547	0,022458	301939	ASBT-2095	30	51	22		
3	**AD-004**		15-1091	3138	0,022551	301951	ASBT-167	30	53	33		
4	**AD-004A45**						ASBT-167	30	53	33		45
5	**AD-005A45**		15-1112	3139	0,022550	301950	ASBT-167	30	53	33		45
6	**AD-009A45**		15-1140	3311	0,022541	301954	ASBT-148	30	59	38		45
7	**AD-010A45**		15-1195	3302	0,022639	301960	ASBT-170	27	59.5	38		45
8	**AD-011A45**		15-1267	3280	0.022763	301961	ASBT-170	27	59.5	38		45
9	**AD-1121A45**		15-1121	3292	0,022581	302183	ASBT-167	25	60	38		45
10	**AD-1241**		15-1241		0,020338	302961	ASBT-105	30	53	36		
11	**AD-012A45**					301955	ASBT-98	30	53	33		45
12	**AD-A64F1**						ASBT-T51	27	59.5	38		
BMW												
13	**BX5-001**						ASBT-5	27	65	30		
14	**BX-E70**						ASBT-XEFO	33	65	30		
CHRYSLER												
15	**CH-016A54**						ASBT-46	32	70	27		54
16	**CH-020A48**						ASBT-119	32	70	27		48
17	**CH-VGRA47**						ASBT-VGR	32	54	26		47
CHEVROLET												
18	**GM-063A47**			3133				32	73	33		47
CITROEN												
19	**PG-12**		15-1177	3112	0,021641		ASBT-117	23	55	25		
20	**PG-364**			3644				34	58.7	25		
21	**PG-53A54**		15-1120	3112	0,020986		ASBT-179	39	63	28		54
22	**PG-69**		15-1015	3069	0,021612	302070	ASBT-2	22	55	25		
23	**PG-78**			3278			ASBT-136	45	70	35		
24	**PG-78A54**		15-1132	3254			ASBT-136	45	70	35		54
DAEWOO												
25	**DW-03**	DW-03					ASBT-2047	19	57	23		
26	**DW-005**	DW-05						29	52	33		
27	**DW-005A47**	DW-05A47	15-1395	3373			ASBT-92	29	52	33		47
28	**DW-006**	DW-06	15-1234	3272	0,021482	302803	ASBT-164	29	52	22		
29	**DW-006A47**						ASBT-164	29	52	33		47
30	**DW-007**	DW-07						22	52	22		
31	**DW-007A47**	DW-07A47	15-1530			303900		22	52	22		47
32	**DW-008**	DW-08						19	52	22		
33	**DW-008A47**	DW-008A47						19	52	22		47
34	**DW-009**	DW-09						32	52	33		
35	**DW-009A47**	DW-09A47						32	52	33		47
36	**DW-011**	DW-11					ASBT-164	22	52	33		
37	**DW-011A47**	DW-11A					ASBT-164	22	52	33		47
38	**DW-1115**	DW-04	15-1115		0,020351	302984	ASBT-2047	19	44	23		
39	**DW-152**	DW-08						19	52	22		
40	**DW-152A47**		15-1527			303898		19	52	22		47
41	**DW-600A47**	DW-06A47		3583K	0,021482		ASBT-164	29	52	22		47
42	**DW-72A40**	DW-03A40			0,021189	303339	ASBT-2047	19	46	23		40
43	**DW-840**							29	52	33		
44	**GM-072**	DW-05					ASBT-127	29	52	33		
45	**GM-109**	DW-01	15-1311	3305	0,021027	303174	ASBT-164	29	52	33		
46	**OP-1007**		15-1007	3039	0,021452	300976	ASBT-20	22	52	22		
DAIHATSU												
47	**DH-01**	DA-01						19	40	24		
48	**DH-02**	DA-02				302026		19	40	24		
49	**DH-03**	DA-03				301967		19	46	24		
50	**DH-04**	DA-04						21	46	24		
51	**DH-05**	DA-05				301990	C8002	22	54	24		
52	**DH-06**	DA-06				301968	ASBT-2047	19	54	24		
53	**DH-07**	DA-07				302784	ASBT-2047	21	54	24		
54	**DH-08**	DA-08				302451	ASBT-2047	20	44	24		
55	**DH-09**	DA-09					ASBT-2047	18	44	24		
56	**DH-10**	DA-10				302450	ASBT-2047	19	44	24		
57	**DH-11**	DA-11				302451	ASBT-2047	20	44	24		
58	**DH-12**	DA-12					ASBT-2047	19	52.1	24		
59	**DH-12A48**	DA-12A48					ASBT-2047	19	52.1	24		48
60	**DH-13**	DA-13					ASBT-2047	18	44	24		
61	**DH-14**	DA-14					ASBT-2047	19	47	24		
62	**DH-15**	DA-15					ASBT-2047	21	54	24		
63	**DH-16**	DA-16					ASBT-2047	19	52	24		
64	**DH-17**	DA-17					ASBT-92	20	52	24		
65	**DH-18**	DA-18					ASBT-92	22	52	24		
66	**DH-20**	DA-20					ASBT-92	21	52	24		
67	**DH-21**	DA-21					ASBT-92	21	52	24		
68	**DH-21A48**	DA-21A48					ASBT-92	21	52	24		48
69	**DH-22**	DA-22					ASBT-2047	19	44	24		
70	**DH-23**	DA-23					ASBT-2047	19	44	24		
71	**DH-24**	DA-24					ASBT-2047	18	47	24		
72	**DH-25**	DA-25					ASBT-2047	20	47	24		
73	**DH-26**	DA-26					ASBT-2047	19	47	24		
74	**DH-27**	DA-27					ASBT-2047	21	47	24		
75	**DH-28**	DA-28					ASBT-2047	20	47	24		

№	ASVA	HDK	METELLI	GLO	GKN	LOEBRO	CV Boot	Teeth of inner spline	Seal diameter	Teeth of outer spline	Diameter of gaps	Teeth of ABS ring
76	**DH-29**	DA-29					ASBT-2047	19	47	24		
77	**DH-30**	DA-30					ASBT-2047	18	47	24		
78	**DH-31**	DA-31					ASBT-92	22	42	24		
79	**DH-32**	DA-32					ASBT-2047	23	42	26		
80	**DH-33A48**	DA-33A48					ASBT-92	22	52	24		48
						FIAT						
81	**FT-003**		15-1019	3501	0,021250	300948		20	43	20		
82	**FT-004**		15-1105	3667	0,020526	300886		20	72	22		
83	**PG-53A54**		15-1120	3112	0,020986			39	63	28		54
84	**PG-78**			3278				45	70	35		
85	**PG-78A54**		15-1132	3254				45	70	35		54
						FORD						
86	**FD-075A48**		15-1389	3525	0,021572	303509	ASBT-170	27	60	38		48
87	**FD-113**						ASBT-105	30	57	27		
88	**FD-113A44**		15-1201	3357		303084	ASBT-105	30	57	27		44
89	**FD-115**						ASBT-163	34	60	27		
90	**FD-354**		15-1354	3546		303332		23	53.2	25		
91	**FD-356A44**		15-1200	3356		303085	ASBT-77	25	57	27		44
92	**FD-809**				0,020322	303385	ASBT-155	21	53.2	25		
						HONDA						
93	**HN-04**	HO-04				302077	ASBT-27	22	45	23		
94	**HN-05**	HO-05				302080	ASBT-27	22	45	24		
95	**HN-06**	HO-06				302081	ASBT-24	30	45	24		
96	**HN-09**	HO-09				302090	ASBT-24	30	45	23		
97	**HN-10**	HO-10	15-1071	3083	0,020307	300991	ASBT-24	30	47	24		
98	**HN-11**	HO-11					ASBT-24	22	49	23		
99	**HN-12**	HO-12	15-1086	3080	0,021385	302082	ASBT-24	27	49	23		
100	**HN-13**	HO-13	15-1044	3052	0,020319	302089	ASBT-24	30	49	23		
101	**HN-18**	HO-18	15-1113	3105	0,020309	302088	ASBT-24	32	49	26		
102	**HN-19**	HO-19	15-1054	3106		302096	ASBT-21	30	49	26		
103	**HN-19A100**	HO-19A100					ASBT-121	30	49	26		100
104	**HN-19A50**	HO-19A50					ASBT-121	30	49	26		50
105	**HN-20**	HO-20	15-1045	3581	0,020312	302094	ASBT-127	32	49	26		
106	**HN-20A100**	HO-20A100	15-1250	3214	0,022350	301944	ASBT-121	32	49	26		100
107	**HN-20A50**	HO-20A50					ASBT-121	32	49	26		50
108	**HN-20A90**	HO-20A90					ASBT-121	32	49	26		90
109	**HN-21**	HO-21	15-1053	3220	0,022365	301941	ASBT-90	32	55	26		
110	**HN-21A50**	HO-21A50	15-1053A	3434		301943	ASBT-90	32	55	26		50
111	**HN-22**	HO-22	15-1131	3180	0,022355	302013	ASBT-2114	32	60	28		
112	**HN-22A50**	HO-22A50	15-1131A	3400	0,022352	302014	ASBT-2114	32	60	28		50
113	**HN-23**	HO-23		3163	0,022357		ASBT-2061	34	60	28		
114	**HN-24**	HO-24	15-1255	3374	0,301986	301986	ASBT-21	30	55	26		
115	**HN-24A50**	HO-24A50					ASBT-21	30	55	26		50
116	**HN-25**	HO-25				300997	ASBT-90	27	45	23		
117	**HN-26**	HO-26				300942	ASBT-21	19	49	23		
118	**HN-27**	HO-27					ASBT-21	18	49	23		
119	**HN-29A50**	HO-33A50					ASBT-110	32	64	28		50
120	**HN-30**	HO-30					ASBT-21	21	49	23		
121	**HN-31**	HO-31	15-1260	3211			ASBT-21	23	49	26		
122	**HN-31A50**	HO-31A50		3389			ASBT-21	23	49	26		50
123	**HN-32**	HO-32	15-1074	3163	0,021179	303322	ASBT-110	34	60	28		
124	**HN-32A50**	HO-32A50	15-1074A	3263	0,022357	302172	ASBT-110	34	60	28		50
125	**HN-33**	HO-33					ASBT-110	32	64	28		
126	**HN-34**	HO-32					ASBT-110	34	60	28		
127	**HN-35**	HO-35				303320	ASBT-21	28	55	26		
128	**HN-35A50**	HO-35A50	15-1301	3486			ASBT-21	28	55	26		50
129	**HN-36**	HO-21					ASBT-21	32	55	26		
130	**HN-36A50**	HO-21A50					ASBT-21	32	55	26		50
131	**HN-38**	HO-35		3486			ASBT-21	28	55	26		
132	**HN-38A50**	HO-35A50	15-1301	3486			ASBT-138	28	55	26		50
133	**HN-42**	HO-42					ASBT-2047	18	47	23		
134	**HN-46**	HO-46					ASBT-92	25	49	23		
135	**HN-47**	HO-47						25	52	23		
136	**HN-52**	HO-52					ASBT-115	36	64	30		
137	**HN-53**	HO-53					ASBT-90	22	55	26		
138	**HN-54**	HO-54					ASBT-21	28	60	26		
139	**HN-54A50**	HO-54A50					ASBT-21	28	60	26		50
140	**HN-55**	HO-55					ASBT-21	30	60	26		
141	**HN-55A50**	HO-55A50					ASBT-21	30	60	26		50
142	**HN-56**	HO-56					ASBT-21	32	60	26		
143	**HN-56A50**	HO-56A50					ASBT-21	32	60	26		50
144	**HN-57**	HO-57					ASBT-2114	32	63	28		
145	**HN-58**	HO-58					ASBT-2080	23	60	26		
146	**HN-58A50**	HO-58A50					ASBT-2080	23	60	26		50
147	**HN-59**	HO-59	15-1424				ASBT-27	28	52	26		
148	**HN-60**	HO-60					ASBT-21	30	63	26		
149	**HN-61A50**	HO-61A50					ASBT-2047	26	49	23		50
150	**HN-ACEA50**		15-1423					32	64	28		50
151	**HN-CE**							32	63	28		
152	**HN-CRVRA50**							25	55	23		50
153	**HN-CVA**						ASBT-21	28	60	26		50
						HYUNDAI						
154	**HY-002A44**	HY-02A44					ASBT-2095	23	50	25		44
155	**HY-011**	HY-11					ASBT-21	25	60	27		
156	**HY-011A47**	HY-11A47						25	60	27		47

№	ASVA	HDK	METELLI	GLO	GKN	LOEBRO	CV Boot	Teeth of inner spline	Seal diameter	Teeth of outer spline	Diameter of gaps	Teeth of ABS ring
157	**HY-12A44**	HY-12A44					ASBT-2080	22	52.5	25		44
158	**HY-12A48**	HY-12A48					ASBT-2080	22	52.5	25		48
159	**HY-14A44**	HY-14A44					ASBT-2080	30	50	25		44
160	**HY-100**	HY-05					ASBT-2047	19	50	25		
161	**HY-1002A38**	HY-05A38					ASBT-2047	19	50	25		38
162	**HY-ELA44**		`					30	50	25		44
163	**MT-04**	HY-01/MI-04	15-1047	3044	0,021381	300981	ASBT-92	22	50	25		
164	**MT-04A29**	HY-01A29					ASBT-27	22	50	25		29
165	**MT-04A44**						ASBT-27	22	50	25		44
166	**MT-05**	HY-04/MI-05	15-1048		0,021382	302074	ASBT-138	23	50	25		
167	**MT-06**	HY-03/MI-06	15-1064	3124		302983	ASBT-21	25	50	25		
168	**MT-06A47**						ASBT-21	25	50	25		47
169	**MT-07**	HY-14/MI-07	15-1191	3219	0,024225	302590	ASBT-138	30	50	25		
170	**MT-11**	HY-02/MI-11	15-1104		0,021382		ASBT-119	23	50	25		
171	**MT-11A47**						ASBT-119	23	50	25		47
172	**MT-13**	MI-13			0,024226	302637	ASBT-21	25	56	28		
173	**MT-17**	MI-17	15-1199	3461			ASBT-21	26	50	25		
174	**HY-SFA52**						ASBT-21	26	60	27		52
175	**HY-SNTA47**						ASBT-SNT		60	27		47
						ISUZU						
176	**ISZ-01**	IS-01				301981	ASBT-138	23	48	24		
177	**ISZ-02**	IS-02		3181	0,023201	302779	ASBT-27	22	50	22		
178	**ISZ-03**	IS-03		3182	0,023200	302778	ASBT-27	21	50	22		
179	**ISZ-04**	IS-04				302640	ASBT-21	26	53	17		
180	**ISZ-05**	IS-05					ASBT-138	23	53	17		
181	**ISZ-06**	IS-06					ASBT-135	25	53	17		
182	**ISZ-07**	IS-07					ASBT-135	33	53	17		
						KIA						
183	**CVK-001**						ASBT-21	24	65	26		
184	**KA-09**	KI-09					ASBT-27	23	60	27		
185	**KA-10A46**	KI-10A46						22	56	28		46
186	**KA-11**	KI-11						25	60	27		
187	**KA-11A47**	KI-11A47						25	60	27		47
188	**KA-12**	KI-12					ASBT-90	24	56	28		
189	**KA-16**	KI-16	15-1609				ASBT-21	26	56	28		
190	**KA-16A54**	KI-16A54					ASBT-21	26	56	28		54
191	**KA-NS2A48**							26	62	27		48
192	**KA-NSA48**						ASBT-NS	25	62	27		48
193	**KA-SR**							25	56	28		
194	**MZ-04**	KI-08					ASBT-2047	21	52	24		
195	**MZ-09**	KI-02					ASBT-27	22	56	26		
196	**MZ-101**	KI-01				303295	ASBT-90	24	56	28		
197	**MZ-11**	KI-10					ASBT-27	22	56	28		
198	**MZ-14**	KI-04					ASBT-2047	19	52	24		
199	**MZ-16**	KI-03					ASBT-2047	20	52	24		
200	**MZ-38A44**	MA-11A44		3531	0,021200		ASBT-90	22	56	28		44
201	**MZ-807**						ASBT-90	25	65	26		
202	**KA-CRTA44**						ASBT-CRT		50	25		44
						LAND ROVER						
203	**LR-08A60**				0,301081		ASBT-18	32	67(35)	24		60
204	**LR-10A60**							32	67(32)	24		60
205	**LR-800A60**							32	56	28		60
						MAZDA						
206	**MZ-01**	MA-01	15-1024	3035	0,021370	302111	ASBT-27	22	52	24		
207	**MZ-02**	MA-02	15-1069	3178	0,023506	302112	ASBT-138	23	52	26		
208	**MZ-03**	MA-03	15-1042	3034	0,021371	302174	ASBT-21	25	52	26		
209	**MZ-04**	MA-04	15-1157	3145	0,023077	301995	ASBT-2047	21	52	24		
210	**MZ-05**	MA-05	15-1135	3267	0,021368	301993	ASBT-138	23	56	26		
211	**MZ-056A44**						ASBT-70	32	56	28		44
212	**MZ-06**	MA-06	15-1059	3176	0,024007	302023	ASBT-84	25	56	26		
213	**MZ-06A90**	MA-06A90		3414			ASBT-84	25	56	26		90
214	**MZ-07**	MA-07	15-1145	3267		301993	ASBT-138	23	56	26		
215	**MZ-08**	MA-08	15-1137	3239	0,024040	302634	ASBT-27	21	56	26		
216	**MZ-08A44**	MA-08A44					ASBT-27	21	56	26		44
217	**MZ-09**	MA-09		3238	0,021033	301994	ASBT-27	22	56	26		
218	**MZ-09A44**	MA-09A44	15-1372	3597	0,021034	303184	ASBT-27	22	56	26		44
219	**MZ-10**	MA-10	15-1291	3322	0,024044	302792	ASBT-21	26	56	28		
220	**MZ-10A44**		15-1328		0,024051	302977	ASBT-135	26	56	28		44
221	**MZ-10A90**						ASBT-21	26	56	28		90
222	**MZ-11**	MA-11					ASBT-27	22	56	28		
223	**MZ-12**	MA-12				302787	ASBT-90	23	52	24		
224	**MZ-14**	MA-14	15-1171	3371	0,020636	302982	ASBT-2047	19	52	24		
225	**MZ-14A44**	MA-14A44					ASBT-2047	19	52	24		44
226	**MZ-15**	MA-15					ASBT-90	24	56	26		
227	**MZ-16**	MA-16	15-1261	3372	0,024048	302783	ASBT-2047	20	52	24		
228	**MZ-17**	MA-17					ASBT-21	25	65	26		
229	**MZ-18**	MA-18	15-1268	3321	0,024047	302763	ASBT-90	23	56	28		
230	**MZ-18A44**	MA-18A44		3496	0,024047	302788	ASBT-90	23	56	28		44
231	**MZ-20**	MA-20					ASBT-2047	21	56	26		
232	**MZ-22**	MA-22		3267			ASBT-14	23	56	26		
233	**MZ-23**	MA-23					ASBT-92	21	56	26		
234	**MZ-23A44**	MA-23A44					ASBT-92	21	56	26		44
235	**MZ-24**	MA-24			0,021649		ASBT-27	22	56	26		
236	**MZ-24A44**	MA-24A44				303184	ASBT-27	22	56	26		44
237	**MZ-26**	MA-26	15-1304	3299	0,021649	301994	ASBT-27	30	56	26		

№	ASVA	HDK	METELLI	GLO	GKN	LOEBRO	CV Boot	Teeth of inner spline	Seal diameter	Teeth of outer spline	Diameter of gaps	Teeth of ABS ring
238	**MZ-26A44**	MA-26A44	15-1304A				ASBT-27	30	56	26		44
239	**MZ-31**	MA-31					ASBT-92	21	56	28		
240	**MZ-34**	MA-34		3533			ASBT-27	28	56	26		
241	**MZ-34A44**	MA-34A44					ASBT-27	28	56	26		44
242	**MZ-35**	MA-35					ASBT-90	23	65	26		
243	**MZ-35A44**	MA-35A44					ASBT-90	23	65	26		44
244	**MZ-36**	MA-36					ASBT-21	33	56.5	28		
245	**MZ-37**	MA-37					ASBT-26	30	56	28		
246	**MZ-37A44**	MA-37A44			0,021199		ASBT-26	30	56	28		44
247	**MZ-38**	MA-38					ASBT-90	22	56	28		
248	**MZ-38A44**	MA-38A44		3531	0,021200		ASBT-90	22	56	28		44
249	**MZ-39**	MA-39					ASBT-92	23	56	28		
250	**MZ-39A44**	MA-39A44					ASBT-92	23	56	28		44
251	**MZ-40**	MA-40					ASBT-21	22	55.3	36		
252	**MZ-41**	MA-41					ASBT-TRB	24	56	28		
253	**MZ-41A44**	MA-41A44					ASBT-TRB	24	56	28		44
254	**MZ-42**	MA-42					ASBT-21	22	58.6	28		
255	**MZ-43**	MA-43					ASBT-21	24	55.2	36		
256	**MZ-44A44**	MA-44A44					ASBT-27	32	62	28		44
257	**MZ-45A44**	MA-45A44					ASBT-2048	29	56	26		44
258	**MZ-FRA44**						ASBT-138	23	56	26		44
259	**MZ-DY3**							20	53	25		
260	**MZ-MPV**						ASBT-21	23	56	26		
261	**MZ-MP2**							35	56	28		
						MERCEDES-BENZ						
262	**ME-124R**							25	62,2	25		
263	**ME-163A48**						ASBT-5	26	79	30		48
264	**ME-168A48**			3530K				27	57	24		48
265	**ME-460A54**					302461		28	62	26		54
266	**ME-801A48**		15-0298	3500K	0,020176	302854	ASBT-163	27	38	27		48
267	**ME-802A48**			3523K	0,303152	303152	ASBT-170	36	71.6	27		48
						MITSUBISHI						
268	**MT-01**	MI-01	15-1026	3044	0,021381	302073	ASBT-27	22	50	25		
269	**MT-03**	MI-03	15-1147	3310	0,024215	301984	ASBT-26	23	54	25		
270	**MT-03A43**	MI-03A43			0,020926	303394	ASBT-26	23	54	25		43
271	**MT-04**	MI-04	15-1047	3261	0,021381	300981	ASBT-27	22	50	25		
272	**MT-04A29**	HY-01A29					ASBT-27	22	50	25		29
273	**MT-04A44**						ASBT-27	22	50	25		44
274	**MT-05**	MI-05	15-1048		0,021382	302075	ASBT-2023	23	50	25		
275	**MT-06**	MI-06	15-1064	3124		302983	ASBT-21	25	50	25		
276	**MT-06A47**						ASBT-21	25	50	25		47
277	**MT-07**	MI-07	15-1191	3219	0,024225	302590	ASBT-26	30	50	25		
278	**MT-08**	MI-08	15-1161	3458	0,024212	301982	ASBT-26	22	54	25		
279	**MT-09**	MI-09	15-1329	3416	0,020323	301985	ASBT-92	30	54	25		
280	**MT-09A43**	MI-09A43	15-1329A				ASBT-92	30	54	25		43
281	**MT-10**	MI-10	15-1148	3309	0,020924	301984	ASBT-2095	23	54	25		
282	**MT-10A43**	MI-10A43	15-1491		0,021718	303523	ASBT-2095	23	54	25		43
283	**MT-11**	MI-11	15-1104		0,021382	302075	ASBT-26	23	50	25		
284	**MT-11A47**						ASBT-121	23	50	25		47
285	**MT-12**	MI-12	15-1161	3458	0,024212	301982	ASBT-92	22	54	25		
286	**MT-12A43**	MI-12A43					ASBT-26	22	54	25		43
287	**MT-13**	MI-13			0,024226	302637	ASBT-21	25	56	28		
288	**MT-14**	MI-14				302012	ASBT-21	27	56	28		
289	**MT-15**	MI-15	15-1332	3328	0,024214	301983	ASBT-77	24	54	25		
290	**MT-15A43**	MI-15A43		3329			ASBT-77	24	54	25		43
291	**MT-16**	MI-16				303317	ASBT-2061	27	60	27		
292	**MT-17**	MI-17	15-1199	3461			ASBT-21	26	50	25		
293	**MT-18**	MI-18					ASBT-122	26	54	25		
294	**MT-19**	MI-19					ASBT-92	18	43	27		
295	**MT-20**	MI-20					ASBT-21	19	43	27		
296	**MT-21**	MI-21					ASBT-21	21	43	27		
297	**MT-22**	MI-22					ASBT-135	26	60	27		
298	**MT-23**	MI-23					ASBT-21	25	60	27		
299	**MT-29**	MI-29					ASBT-26	23	54	25		
300	**MT-30**	MI-30						27	56	28		
301	**MT-32**	MI-32					ASBT-121	29	54	25		
302	**MT-32A43**	MI-32A43					ASBT-121	29	54	25		43
303	**MT-33**	MI-33					ASBT-26	24	54	25		
304	**MT-33A43**	MI-33A43					ASBT-26	24	54	25		43
305	**MT-34**	MI-34					ASBT-26	32	54	25		
306	**MT-34A43**	MI-34A43					ASBT-26	32	54	25		43
307	**MT-35**	MI-35					ASBT-27	23	57	25		
308	**MT-35A43**	MI-35A43					ASBT-27	23	57	25		43
309	**MT-36**	MI-36					ASBT-27	30	57	25		
310	**MT-36A43**	MI-36A43					ASBT-27	30	57	25		43
311	**MT-37**	MI-37					ASBT-27	22	57	25		
312	**MT-37A43**	MI-37A43					ASBT-27	22	57	25		43
313	**MT-38**	MI-38					ASBT-27	29	57	25		
314	**MT-38A43**	MI-38A43					ASBT-27	29	57	25		43
315	**MT-39**	MI-39					ASBT-27	21	54	25		
316	**MT-40**	MI-40					ASBT-121	29	54	25		
317	**MT-40A43**	MI-40A43					ASBT-121	29	54	25		43
318	**MT-41**	MI-41					ASBT-27	29	55	25		
319	**MT-42**	MI-42					ASBT-92	29	50	25		
320	**MT-43**	MI-43					ASBT-27	21	55	25		

№	ASVA	HDK	METELLI	GLO	GKN	LOEBRO	CV Boot	Teeth of inner spline	Seal diameter	Teeth of outer spline	Diameter of gaps	Teeth of ABS ring
321	**MT-44A43**	MI-44A43					ASBT-27	33	57	25		43
322	**MT-801A43**		15-1385	3528	0,021745	303527	ASBT-164	29	54	25		43
323	**MT-808**	MI-36					ASBT-164	30	57	25		
324	**MT-99A50**	MI-45A50					ASBT-135	33	66	30		50
325	**MT-H76A43**							29	54	25		43
326	**MT-PNA43**						ASBT-209	19	54	25		43
327	**MT-N84A43**						ASBT-26	24	54	25		43
328	**MT-N94A43**						ASBT-26	30	54	25		43
329	**MT-CW5**						ASBT-CW5	35	59.5	28		
330	**MT-CY2**						ASBT-CY2	30	59.5	28		
331	**MT-CY3**						ASBT-CY3	33	59.5	28		
332	**MT-KB4A47**						ASBT-KB4	35	69	30		47
333	**MT-Z36**						ASBT-Z36	21	60	25		
						NISSAN						
334	**NS-04**	NI-04	15-1100	3686	0,020904	302098	ASBT-92	22	52	24		
335	**NS-06**	NI-06				302033	ASBT-2047	19	48	21		
336	**NS-07**	NI-07	15-1060	3110	0,021315	302100	ASBT-20	22	52.3	25		
337	**NS-08**	NI-08				302018	ASBT-21	23	56	27		
338	**NS-09**	NI-09		3147			ASBT-21	23	56	27		
339	**NS-09A42**	NI-09A42					ASBT-21	23	56	27		42
340	**NS-10**	NI-10	15-1129	3149	0,024433	302034	ASBT-2047	19	48	21		
341	**NS-11**	NI-11	15-1136	3384	0,024436	302021	ASBT-21	25	52.3	25		
342	**NS-12**	NI-12				302790	ASBT-90	24	52.3	25		
343	**NS-13**	NI-13	15-1163	3271	0,024432	301989	ASBT-26	22	55	25		
344	**NS-13A42**	NI-13A42	15-1293				ASBT-26	22	55	25		42
345	**NS-14**	NI-14		3143		302017	ASBT-127	23	52.3	25		
346	**NS-15**	NI-15	15-1249	3233	0,024440	302793	ASBT-21	25	56	27		
347	**NS-15A42**	NI-15A42					ASBT-21	25	56	27		42
348	**NS-16**	NI-16	15-1249	3377	0,02444	303126	ASBT-2114	25	56	27		
349	**NS-17**	NI-17	15-1248	3268	0,024434	302789	ASBT-21	23	55	25		
350	**NS-17A42**	NI-17A42	15-1275	3269	0,021188	303336	ASBT-26	23	55	25		42
351	**NS-18**	NI-18					ASBT-90	30	55	25		
352	**NS-19**	NI-19	15-1098	3098	0,024409	302018	ASBT-21	23	56	27		
353	**NS-19A42**	NI-19A42					ASBT-21	23	56	27		42
354	**NS-20**	NI-20	15-1315	3270	0,024435	302020	ASBT-21	25	55	25		
355	**NS-200**						ASBT-21	32	50	27		
356	**NS-201**	NI-64					ASBT-122	27	50	28		
357	**NS-22**	NI-22				301002	ASBT-90	23	52	24		
358	**NS-23**	NI-23						27	60	31		
359	**NS-24**	NI-24					ASBT-122	27	50	27		
360	**NS-25**	NI-25					ASBT-21	27	50	26		
361	**NS-26**	NI-26	15-1172	3148	0,024430	302015	ASBT-21	32	56	27		
362	**NS-26A42**		15-1173	3424	0,024431	302016	ASBT-21	32	56	27		42
363	**NS-27**	NI-27				303288	ASBT-110	27	56	29		
364	**NS-28**	NI-28					ASBT-90	25	52	24		
365	**NS-29**	NI-29					ASBT-21	23	56	27		
366	**NS-30**	NI-30					ASBT-21	25	56	27		
367	**NS-31**	NI-31					ASBT-21	25	56	27		
368	**NS-34**	NI-34					ASBT-21	23	56	27		
369	**NS-34A44**	NI-34A44					ASBT-127	23	56	27		44
370	**NS-35**	NI-35					ASBT-2114	25	56	27		
371	**NS-36**	NI-36					ASBT-21	27	56	27		
372	**NS-364A44**						ASBT-84	24	56	27		44
373	**NS-38**	NI-38				302019	ASBT-138	23	55	25		
374	**NS-39**	NI-39					ASBT-92	22	55	25		
375	**NS-40**	NI-40					ASBT-110	27	56	29		
376	**NS-40A46**	NI-27A46					ASBT-2114	27	56	29		46
377	**NS-41**	NI-41	15-1187	3150			ASBT-2047	19	48	23		
378	**NS-43**	NI-43	15-1196		0,020079	303307	ASBT-2047	19	48	23		
379	**NS-43A42**	NI-43A42	15-1197		0,020090	303307	ASBT-2047	19	48	23		42
380	**NS-44**	NI-44	15-1194	3380	0,020099	303308	ASBT-105	22	48	23		
381	**NS-44A42**	NI-44A42	15-1193	3385	0,020104	303308	ASBT-105	22	48	23		42
382	**NS-45**	NI-45					ASBT-21	23	56	27		
383	**NS-49**	NI-05	15-1085		0,021308		ASBT-90	22	48	21		
384	**NS-50**	NI-13	15-1163	3271	0,024432	301989	ASBT-92	22	55	25		
385	**NS-51**	NI-51	15-1164	3146	0,024428	301987	ASBT-21	22	56	27		
386	**NS-51A42**	NI-51A42	15-1165	3422	0,024429	301988	ASBT-21	22	56	27		42
387	**NS-51A44**	NI-51A44					ASBT-21	22	56	27		44
388	**NS-51A46**	NI-51A46					ASBT-21	22	56	27		46
389	**NS-52**	NI-52					ASBT-122	34	56	29		
390	**NS-55**	NI-55					ASBT-92	23	55	25		
391	**NS-55A42**	NI-55A42					ASBT-92	23	55	25		42
392	**NS-57**	NI-57					ASBT-21	32	56	27		
393	**NS-57A44**	NI-57A44		3540	0,021531	303447	ASBT-5	32	56	27		44
394	**NS-60**	NI-60					ASBT-92	22	55	25		
395	**NS-60A42**	NI-60A42					ASBT-92	22	55	25		42
396	**NS-61**	NI-61					ASBT-26	23	55	25		
397	**NS-61A42**	NI-61A42					ASBT-26	23	55	25		42
398	**NS-62**	NI-62					ASBT-26	23	55	25		
399	**NS-62A42**	NI-62A42					ASBT-26	23	55	25		42
400	**NS-64**	NI-64					ASBT-122	27	50	28		
401	**NS-65A44**	NI-65A44					ASBT-21	25	56	27		44
402	**NS-66**	NI-66					ASBT-24	23	56	27		
403	**NS-66A44**	NI-66A44					ASBT-24	23	56	27		44
404	**NS-68**	NI-68					ASBT-26	22	49	25		

№	ASVA	HDK	METELLI	GLO	GKN	LOEBRO	CV Boot	Teeth of inner spline	Seal diameter	Teeth of outer spline	Diameter of gaps	Teeth of ABS ring
321	**MT-44A43**	MI-44A43					ASBT-27	33	57	25		43
322	**MT-801A43**		15-1385	3528	0,021745	303527	ASBT-164	29	54	25		43
323	**MT-808**	MI-36					ASBT-164	30	57	25		
324	**MT-99A50**	MI-45A50					ASBT-135	33	66	30		50
325	**MT-H76A43**							29	54	25		43
326	**MT-PNA43**						ASBT-209	19	54	25		43
327	**MT-N84A43**						ASBT-26	24	54	25		43
328	**MT-N94A43**						ASBT-26	30	54	25		43
329	**MT-CW5**						ASBT-CW5	35	59.5	28		
330	**MT-CY2**						ASBT-CY2	30	59.5	28		
331	**MT-CY3**						ASBT-CY3	33	59.5	28		
332	**MT-KB4A47**						ASBT-KB4	35	69	30		47
333	**MT-Z36**						ASBT-Z36	21	60	25		
						NISSAN						
334	**NS-04**	NI-04	15-1100	3686	0,020904	302098	ASBT-92	22	52	24		
335	**NS-06**	NI-06				302033	ASBT-2047	19	48	21		
336	**NS-07**	NI-07	15-1060	3110	0,021315	302100	ASBT-20	22	52.3	25		
337	**NS-08**	NI-08				302018	ASBT-21	23	56	27		
338	**NS-09**	NI-09		3147			ASBT-21	23	56	27		
339	**NS-09A42**	NI-09A42					ASBT-21	23	56	27		42
340	**NS-10**	NI-10	15-1129	3149	0,024433	302034	ASBT-2047	19	48	21		
341	**NS-11**	NI-11	15-1136	3384	0,024436	302021	ASBT-21	25	52.3	25		
342	**NS-12**	NI-12				302790	ASBT-90	24	52.3	25		
343	**NS-13**	NI-13	15-1163	3271	0,024432	301989	ASBT-26	22	55	25		
344	**NS-13A42**	NI-13A42	15-1293				ASBT-26	22	55	25		42
345	**NS-14**	NI-14		3143		302017	ASBT-127	23	52.3	25		
346	**NS-15**	NI-15	15-1249	3233	0,024440	302793	ASBT-21	25	56	27		
347	**NS-15A42**	NI-15A42					ASBT-21	25	56	27		42
348	**NS-16**	NI-16	15-1249	3377	0,02444	303126	ASBT-2114	25	56	27		
349	**NS-17**	NI-17	15-1248	3268	0,024434	302789	ASBT-21	23	55	25		
350	**NS-17A42**	NI-17A42	15-1275	3269	0,021188	303336	ASBT-26	23	55	25		42
351	**NS-18**	NI-18					ASBT-90	30	55	25		
352	**NS-19**	NI-19	15-1098	3098	0,024409	302018	ASBT-21	23	56	27		
353	**NS-19A42**	NI-19A42					ASBT-21	23	56	27		42
354	**NS-20**	NI-20	15-1315	3270	0,024435	302020	ASBT-21	25	55	25		
355	**NS-200**						ASBT-21	32	50	27		
356	**NS-201**	NI-64					ASBT-122	27	50	28		
357	**NS-22**	NI-22				301002	ASBT-90	23	52	24		
358	**NS-23**	NI-23						27	60	31		
359	**NS-24**	NI-24					ASBT-122	27	50	27		
360	**NS-25**	NI-25					ASBT-21	27	50	26		
361	**NS-26**	NI-26	15-1172	3148	0,024430	302015	ASBT-21	32	56	27		
362	**NS-26A42**		15-1173	3424	0,024431	302016	ASBT-21	32	56	27		42
363	**NS-27**	NI-27				303288	ASBT-110	27	56	29		
364	**NS-28**	NI-28					ASBT-90	25	52	24		
365	**NS-29**	NI-29					ASBT-21	23	56	27		
366	**NS-30**	NI-30					ASBT-21	25	56	27		
367	**NS-31**	NI-31					ASBT-21	25	56	27		
368	**NS-34**	NI-34					ASBT-21	23	56	27		
369	**NS-34A44**	NI-34A44					ASBT-127	23	56	27		44
370	**NS-35**	NI-35					ASBT-2114	25	56	27		
371	**NS-36**	NI-36					ASBT-21	27	56	27		
372	**NS-364A44**						ASBT-84	24	56	27		44
373	**NS-38**	NI-38				302019	ASBT-138	23	55	25		
374	**NS-39**	NI-39					ASBT-92	22	55	25		
375	**NS-40**	NI-40					ASBT-110	27	56	29		
376	**NS-40A46**	NI-27A46					ASBT-2114	27	56	29		46
377	**NS-41**	NI-41	15-1187	3150			ASBT-2047	19	48	23		
378	**NS-43**	NI-43	15-1196		0,020079	303307	ASBT-2047	19	48	23		
379	**NS-43A42**	NI-43A42	15-1197		0,020090	303307	ASBT-2047	19	48	23		42
380	**NS-44**	NI-44	15-1194	3380	0,020099	303308	ASBT-105	22	48	23		
381	**NS-44A42**	NI-44A42	15-1193	3385	0,020104	303308	ASBT-105	22	48	23		42
382	**NS-45**	NI-45					ASBT-21	23	56	27		
383	**NS-49**	NI-05	15-1085		0,021308		ASBT-90	22	48	21		
384	**NS-50**	NI-13	15-1163	3271	0,024432	301989	ASBT-92	22	55	25		
385	**NS-51**	NI-51	15-1164	3146	0,024428	301987	ASBT-21	22	56	27		
386	**NS-51A42**	NI-51A42	15-1165	3422	0,024429	301988	ASBT-21	22	56	27		42
387	**NS-51A44**	NI-51A44					ASBT-21	22	56	27		44
388	**NS-51A46**	NI-51A46					ASBT-21	22	56	27		46
389	**NS-52**	NI-52					ASBT-122	34	56	29		
390	**NS-55**	NI-55					ASBT-92	23	55	25		
391	**NS-55A42**	NI-55A42					ASBT-92	23	55	25		42
392	**NS-57**	NI-57					ASBT-21	32	56	27		
393	**NS-57A44**	NI-57A44		3540	0,021531	303447	ASBT-5	32	56	27		44
394	**NS-60**	NI-60					ASBT-92	22	55	25		
395	**NS-60A42**	NI-60A42					ASBT-92	22	55	25		42
396	**NS-61**	NI-61					ASBT-26	23	55	25		
397	**NS-61A42**	NI-61A42					ASBT-26	23	55	25		42
398	**NS-62**	NI-62					ASBT-26	23	55	25		
399	**NS-62A42**	NI-62A42					ASBT-26	23	55	25		42
400	**NS-64**	NI-64					ASBT-122	27	50	28		
401	**NS-65A44**	NI-65A44					ASBT-21	25	56	27		44
402	**NS-66**	NI-66					ASBT-24	23	56	27		
403	**NS-66A44**	NI-66A44					ASBT-24	23	56	27		44
404	**NS-68**	NI-68					ASBT-26	22	49	25		

№	ASVA	HDK	METELLI	GLO	GKN	LOEBRO	CV Boot	Teeth of inner spline	Seal diameter	Teeth of outer spline	Diameter of gaps	Teeth of ABS ring
405	**NS-69A44**	NI-69A44					ASBT-170	25	56	29		44
406	**NS-70A44**	NI-70A44					ASBT-21	35	56	27		44
407	**NS-71**	NI-71						25	50	28		
408	**NS-72A44**	NI-72A44					ASBT-24	23	56	29		44
409	**NS-73**	NI-73						28	60	31		
410	**NS-74**	NI-74						25	56	29		
411	**NS-75**	NI-75						36	56	29		
412	**NS-76A44**	NI-76A44					ASBT-26	23	56	27		44
413	**NS-AV-A44**	NI-16A44					ASBT-2114	25	56	27		44
414	**NS-J10**							35	56	29		
415	**NS-J31B**						ASBT-J31B	24	51	29		
416	**NS-J31C**						ASBT-J31C	25	56	29		
417	**NS-K12E**		15-1442					21	49	23		
418	**NS-N16**							22	55	25		
419	**NS-N16A42**						ASBT-2114	22	55	25		42
420	**NS-N16BA44**						ASBT-N16B	23	55	25		44
421	**NS-NT**						ASBT-NT	22	49	23		
422	**NS-P11A44**		15-1348	3515	0,020232	303380	ASBT-21	22	56	27		44
423	**NS-P12A44**						ASBT-P12	23	56	27		44
424	**NS-P31**							27	67.2	29		
425	**NS-P32**							26	67.2	29		
426	**NS-TD1**						ASBT-TD1	23	49	25		
427	**NS-TD2**						ASBT-TD2	22	49	25		
428	**NS-QG18A42**							23	55	25		42
429	**NS-QT**											
430	**NS-SKLRA46**	SP-NI01					ASBT-127	22	56	27		46
431	**NS-TN-A44**						ASBT-76	23	56	27		44
432	**NS-W11A44**						ASBT-64	25	56	27		44
433	**NS-XRA44**							24	58	29		44
						OPEL						
434	**OP-1007**		15-1007	3039	0,021452	300976	ASBT-20	22	52	22		
435	**OP-1008**		15-1008	3538	0,021455	302168	ASBT-77	25	52.3	33		
436	**OP-1051**		15-1051		0,020183	302863	ASBT-21	25	52	33		
437	**OP-1051A29**		15-1051	3100	0,021427	302169	ASBT-21	25	52	33		29
438	**OP-1052A43**		15-1052	3127	0,021497	302170	ASBT-139	25	52	33		43
439	**OP-1118**		15-1118	3360	0,020181	302815	ASBT-20	22	52	22		
440	**OP-3118A43**		15-1057	3118	0,021456	302068	ASBT-20	22	52	22		43
441	**OP-3126A29**		15-1056	3126	0,021428	302069	ASBT-20	22	52	22		29
442	**OP-3359A29**		15-1116	3359	0,021429	302454	ASBT-164	28	52	22		29
443	**OP-504**		15-1504	3739K		304384		22	53	33		
444	**OP-68**		15-1029	3068			ASBT-164	28	52	22		
445	**OP-75311S**		15-1287		0,021195	303358	ASBT-164	22	52	33		
446	**OP-75313S**		15-1290				ASBT-2048	28	52	33		
447	**OP-ANT**						ASBT-ANT	34	55	30		
						PEUGEOT						
448	**PG-12**		15-1177	3112	0,021641		ASBT-21	23	56	25		
449	**PG-206A48**		15-1382	3573	0,021039			22	50	21		48
450	**PG-364**		15-1455	3644		303936		34	58.7	25		
451	**PG-365**		15-1456	3655				22	58.7	25		
452	**PG-51A48**		15-1179	3243	0,021581		ASBT-127	23	58	28		48
453	**PG-52A48**		15-1180	3244			ASBT-179	27	58	28		48
454	**PG-53A54**		15-1120	3112	0,020986		ASBT-179	39	63	28		54
455	**PG-69**		15-1015	3069	0,021612	302070	ASBT-2080	22	55	25		
456	**PG-78**			3278			ASBT-136	45	70	35		
457	**PG-78A54**		15-1132	3254			ASBT-136	45	70	35		54
458	**PG-81A29**		15-1292	3481	0,021695	302924	ASBT-116	34	59	25		29
						RENAULT						
459	**RN-1310A44**					303064		23	651	21		44
460	**RN-1311A44**					303065		23	748	21		44
461	**RN-1316**		15-1316		0,023339	302889		25	56	23		
462	**RN-1316A30**		15-1336	3497			ASBT-148	25	56.3	23		30
463	**RN-357A26**				0,021066	303233		30	630	21		26
464	**RN-358A26**				0,021067	303234		30	52.3	21		26
						RUSSIA						
465	**LD-001**	LD-01	15-1081	3107		302040	LDBT-01	22	50	22		
466	**LD-002**						ASBT-2082	22	46	24		
467	**LD-003**			3120		302130	ASBT-2082	22	56	22		
468	**MK-01**		15-1184	3226		302319	ASBT-21	25	52	25		
469	**OK-001**						OKBT-01	19	40	20		
470	**TV-01**		15-0228			300950	ASBT-121	22	42	22		
						SAAB						
471	**SA-004**		15-1168		0,023657	302165	ASBT-167	25	57	26		
						SEAT						
472	**FD-075A48**		15-1389	3525	0,021572	303509	ASBT-170	27	60	38		48
473	**VW-010**		15-1096	3548	0,020260	302060	ASBT-20	30	51	22		
474	**VW-029**		15-1189	3340	0,022627	302963	ASBT-157	30	53	36		
						SKODA						
475	**AD-011A45**		15-1267	3280	0.022763	301961	ASBT-170	27	59.5	38		45
476	**AD-1241**		15-1241		0,020338	302961		30	53	36		
477	**SK-1158**		15-1158	3119			ASBT-2095	22	47	22		
478	**SK-1403**		15-1403	3541		303555		20	52	30		
479	**SK-1413**		15-1413	3542		303556		30	52	36		
480	**SK-1414**		15-1414	3543		303557		30	52	36		

№	ASVA	HDK	METELLI	GLO	GKN	LOEBRO	CV Boot	Teeth of inner spline	Seal diameter	Teeth of outer spline	Diameter of gaps	Teeth of ABS ring
481	**VW-029**		15-1189	3340	0,022627	302963	ASBT-157	30	53	36		
						SSUNG YONG						
482	**OP-807**						ASBT-77	35	53	28		
483	**ME-ISTA48**						ASBT-257	35	65	30		48
						SUBARU						
484	**SB-01**	FU-01				302104	ASBT-138	23	52	30		
485	**SB-02**	FU-02				302101	ASBT-92	22	52	30		
486	**SB-03**	FU-03				302104	ASBT-138	23	52	30		
487	**SB-04**	FU-04	15-1077	3191	0,022164	302173	ASBT-21	25	58	30		
488	**SB-05**	FU-05				302106	ASBT-92	22	58	30		
489	**SB-06**	FU-06				302107	ASBT-138	23	58	30		
490	**SB-07**	FU-07	15-1247	3229	0,022177	301991	ASBT-92	22	56	27		
491	**SB-08**	FU-08	15-1084	3192	0,022175	301946	ASBT-90	30	56	27		
492	**SB-09**	FU-09	15-1151	3294	0,022179	302022	ASBT-2114	25	56	27		
493	**SB-10**	FU-10				301969	ASBT-2047	19	50	24		
494	**SB-11**	FU-11					ASBT-2047	19	50	27		
495	**SB-12**	FU-12				302781	ASBT-2047	21	50	27		
496	**SB-15**	FU-15					ASBT-2047	18	50	24		
497	**SB-16**	FU-16					ASBT-2047	19	50	24		
498	**SB-17**	FU-17					ASBT-2047	18	50	24		
499	**SB-18**	FU-18					ASBT-2047	19	50	24		
500	**SB-19**	FU-19					ASBT-2047	18	50	24		
501	**SB-20**	FU-20					ASBT-2047	19	50	24		
502	**SB-21**	FU-21					ASBT-2047	19	50	24		
503	**SB-23**	FU-23					ASBT-27	21	50	24		
504	**SB-24**	FU-24					ASBT-27	22	50	24		
505	**SB-25**	FU-25						19	50	24		
506	**SB-26**	FU-26					ASBT-20	30	56	27		
507	**SB-26A44**	FU-26A44					ASBT-20	30	56	27		44
508	**SB-TRC**						ASBT-TRC	30	57	27		
509	**SBR-01**						ASBT-27	23	56	27		
						SUZUKI						
510	**SZ-01**	SU-01	15-1080	3532	0,021080		ASBT-2047	19	44	23		
511	**SZ-027**	SU-06			0,021088		ASBT-27	22	49	25		
512	**SZ-03**	SU-03	15-1117	3122	0,021081		ASBT-2047	18	44	23		
513	**SZ-04**	SU-04					ASBT-2047	19	49	23		
514	**SZ-07**	SU-07					ASBT-2047	19	44	23		
515	**SZ-09**	SU-09					ASBT-27	22	27.9	26		
516	**SZ-10**	SU-10					ASBT-2047	19	44	23		
517	**SZ-11**	SU-11					ASBT-27	29	48	26		
518	**SZ-12**	SU-12			0,021082	301970	ASBT-27	22	48	26		
519	**SZ-13**	SU-13					ASBT-2047	17	44	23		
520	**SZ-14**	SU-14					ASBT-23	17	44	23		
521	**SZ-15**	SU-15					ASBT-23	19	44	23		
522	**SZ-17**	SU-17					ASBT-2047	19	49	23		
523	**SZ-17A43**	SU-17A43					ASBT-23	19	49	23		43
524	**SZ-18A42**	SU-18A42					ASBT-2047	21	49	25		
525	**SZ-19**	SU-19	15-1365	3444			ASBT-2047	19	49	25		
526	**SZ-19A42**	SU-19A42					ASBT-2047	19	49	25		
527	**SZ-20**	SU-20	15-1360	3512		303178	ASBT-2047	20	49	23		
528	**SZ-22**	SU-22	15-1361	3511		303179	ASBT-23	20	49	23		
529	**SZ-23**	SU-23					ASBT-23	18	44	23		
530	**SZ-24**	SU-24					ASBT-23	24	49	23		
531	**SZ-29A42**	SU-29A42					ASBT-27	29	49	25		42
532	**SZ-29A43**	SU-29A43					ASBT-27	29	49	25		43
533	**SZ-30A43**	SU-30A43					ASBT-27	29	49	25		43
534	**SZ-33**	SU-33					ASBT-155	32	48	26		
535	**SZ-801**	SU-18		3418	0,021007		ASBT-2047	21	49	25		
536	**SZ-802**	SU-21		3508			ASBT-2047	20	49	25		
537	**SZ-802A42**			3442			ASBT-2047	20	49	25		42
538	**SZ-GV2**							22	58.3	28		
539	**SZ-GVT**						ASBT-27	29	48	26		
						TOYOTA						
540	**TY-01**	TO-01					ASBT-119	27	56	26		
541	**TY-01A48**	TO-01A48					ASBT-119	27	56	26		48
542	**TY-02**	TO-02						24	56	26		
543	**TY-03**	TO-03	15-1253	3218	0,022312	302785	ASBT-92	23	56	23		
544	**TY-04**	TO-04						23	56	26		
545	**TY-05**	TO-05	15-1134	3235	0,022313	302791	ASBT-21	25	56	26		
546	**TY-06**	TO-06		3513	0,022310	301095	ASBT-100	27	33.5	30		
547	**TY-07**	TO-07					ASBT-92	30	56	26		
548	**TY-08**	TO-08				302578	ASBT138	29	56	26		
549	**TY-09**	TO-09	15-1070	3050	0,022307	302110	ASBT-24	24	56	26		
550	**TY-10**	TO-10	15-1346	3049	0,022311	301992	ASBT-92	23	56	26		
551	**TY-101**	TO-74						30	72.3	30		
552	**TY-11**	TO-11			0,021009	303139		27	33.5	30		
553	**TY-12**	TO-12		3295	0,020136	302814	ASBT-21	27	56	26		
554	**TY-13**	TO-13					ASBT-100	27	56	30		
555	**TY-13A48**	TO-13A48					ASBT-21	27	56	30		48
556	**TY-14**	TO-14					ASBT-2114	27	60	26		
557	**TY-15**	TO-15			0,021177	303318	ASBT-115	24	59	30		
558	**TY-15A48**	TO-30A48					ASBT-115	24	59	30		48
559	**TY-16**	TO-16					ASBT-92	23	56	26		
560	**TY-17A48**	TO-13A48					ASBT-2114	27	56	30		48
561	**TY-18**	TO-18				302814	ASBT-21	27	56	26		

№	ASVA	HDK	METELLI	GLO	GKN	LOEBRO	CV Boot	Teeth of inner spline	Seal diameter	Teeth of outer spline	Diameter of gaps	Teeth of ABS ring
646	**VW-029**		15-1189	3340	0,022627	302963	ASBT-76	30	53	36		
647	**VW-B61**					304327	ASBT-B61	30	59.5	36		
648	**VW-B62**					304329	ASBT-B62	27	59.5	36		
649	**VW-T51**					303993	ASBT-T51	27	63	38		
650	**VW-T52**					303995	ASBT-T52	29	63	38		
651	**VW-TG**						ASBT-TG	27	64	30		
						VOLVO						
652	**VO-058A44**		15-1272	3405	0,020826	302058	ASBT-2059	22	50	22		44
653	**VO-143A44**			3569		302143	ASBT-21	25	50	22		44
654	**VO-148**		15-1133		0,020931	302148	ASBT-90	25	57	26		
655	**VO-148A48**		15-1133			302148	ASBT-90	25	57	26		48
656	**VO-192A48**		15-1368		0,020831	302192	ASBT-122	28	57	26		48
657	**VO-617A48**			3617K				33	56.5	36		48
658	**VO-618A48**			3618K			ASBT-170	27	56.5	36		48
659	**VO-XC9**							27	56.7	36		48
						CVJ INNER						
						EUROPE						
660	**ADIU-A61**						ASBT-IN61	34	123			
661	**BIUR-341**					302273		25	100			
662	**BIUR-342**					302294		28	108			
663	**BIUR-361**					302225		24	94			
664	**BIUR-362**					302274		25	100			
665	**BX5IL-001**						ASBT-91	27	44	27		
666	**BX5IR-001**						ASBT-91	27	44	27		
667	**FDID-5024**						ASBT-26	32	42	35		
668	**MEIU-124**					302271						
669	**MEIU-163**						ASBT-163	26	45	37		
670	**MEIU-5001**						ASBT-21	30	54	30		
671	**MEIU-5002**							30	122			
672	**OPIU-5001**						ASBT-21	28	35	22		
673	**OPIU-5002**							22	35	22		
674	**OPIU-5003**						ASBT-76	25	35	34		
675	**PG-272031**						ASBT-95	22	40	22		
676	**PG-272032**						ASBT-95	22	42.5	22		
677	**SK-3-5010**						ASBT-27	30	40	22		
678	**VOIL-850**						ASBT-71	25	40	26		
679	**VOIR-850**						ASBT-71	25	50.5	26		
680	**VW-1001**						ASBT-108	33	100			
681	**VW-1014**							28	108			
682	**VWIL-T5M1**						ASBT-T5M1	28	101			
683	**VWIL-T5M2**						ASBT-T5M2	30	46.8	26		
684	**VWIR-T5M1**						ASBT-T5M1	28	44.2	26		
685	**VWIR-T5M2**						ASBT-T5M2	30	44.5	26		
686	**VWIU-5016**		16-1003	4005		302229		28	108			
687	**VWIU-5021**						ASBT-108	33	100			
688	**VWIU-5023**							28	108			
689	**VWIU-B6A1**						ASBT-INB6A1	34	119			
690	**VWIU-B6M1**						ASBT-INB6M1	28	108			
691	**VWIU-G41**						ASBT-ING41	30	108			
692	**VWIU-TG**					304556	ASBT-INTG	28	112			
						KOREA						
693	**DWIU-556**							19	35	22		
694	**DWIU-845**							22	35	34		
695	**DWIU-LAC**							29	39	22		
696	**GMIU-1001**						ASBT-140	29	35	34		
697	**HYIL-ACC**							22	35	25		
698	**HYIL-SF**							25	41	27		
699	**HYIL-SF2**							26	41	27		
700	**HYIL-TER**							25	35	28		
701	**HYIL-TER2**							34	34.5	28		
702	**HYIR-ACC**							22	35	25		
703	**HYIR-SF**							25	42	26		
704	**HYIR-TER2**							34	140			
705	**HYIU-100**						ASBT-2047	19	35	22		
706	**KAIL-20S**							24	41	27		
707	**KAIL-500**							25	41	27		
708	**KAIL-900**							33	41	27		
709	**KAIL-910**											
710	**KAIL-SR**							25	42	28		
711	**KAIR-250**							23	42	26		
712	**KAIR-50S**							24	42	26		
713	**KAIR-550**							25	42	26		
714	**KAIR-750**							26	42	26		
715	**KAIR-950**							33	42	26		
716	**KAIR-SR**							25	42	28		
717	**MEIU-IST**						ASBT41-6104	35	55	30		
718	**MTIP-5024**						ASBT-21	26	35	27		
719	**MTIP-5025**						ASBT-21	26	37	27		
720	**MTIU-5026**						ASBT-33	23	35	25		
721	**MTIU-5035**						ASBT-2048	22	35	25		
722	**MZID-5022**						ASBT-66	25	35	26		
723	**MZIP-5021**						ASBT-90	25	40	26		
724	**OPIU-5004**						41-3253	22	35	34		
725	**OPIU-5005**						ASBT-2067	19	35	22		
						HONDA						

№	ASVA	HDK	METELLI	GLO	GKN	LOEBRO	CV Boot	Teeth of inner spline	Seal diameter	Teeth of outer spline	Diameter of gaps	Teeth of ABS ring
646	**VW-029**		15-1189	3340	0,022627	302963	ASBT-76	30	53	36		
647	**VW-B61**					304327	ASBT-B61	30	59.5	36		
648	**VW-B62**					304329	ASBT-B62	27	59.5	36		
649	**VW-T51**					303993	ASBT-T51	27	63	38		
650	**VW-T52**					303995	ASBT-T52	29	63	38		
651	**VW-TG**						ASBT-TG	27	64	30		
						VOLVO						
652	**VO-058A44**		15-1272	3405	0,020826	302058	ASBT-2059	22	50	22		44
653	**VO-143A44**			3569		302143	ASBT-21	25	50	22		44
654	**VO-148**		15-1133		0,020931	302148	ASBT-90	25	57	26		
655	**VO-148A48**		15-1133			302148	ASBT-90	25	57	26		48
656	**VO-192A48**		15-1368		0,020831	302192	ASBT-122	28	57	26		48
657	**VO-617A48**			3617K				33	56.5	36		48
658	**VO-618A48**			3618K			ASBT-170	27	56.5	36		48
659	**VO-XC9**							27	56.7	36		48
						CVJ INNER						
						EUROPE						
660	**ADIU-A61**						ASBT-IN61	34	123			
661	**BIUR-341**					302273		25	100			
662	**BIUR-342**					302294		28	108			
663	**BIUR-361**					302225		24	94			
664	**BIUR-362**					302274		25	100			
665	**BX5IL-001**						ASBT-91	27	44	27		
666	**BX5IR-001**						ASBT-91	27	44	27		
667	**FDID-5024**						ASBT-26	32	42	35		
668	**MEIU-124**					302271						
669	**MEIU-163**						ASBT-163	26	45	37		
670	**MEIU-5001**						ASBT-21	30	54	30		
671	**MEIU-5002**							30	122			
672	**OPIU-5001**						ASBT-21	28	35	22		
673	**OPIU-5002**							22	35	22		
674	**OPIU-5003**						ASBT-76	25	35	34		
675	**PG-272031**						ASBT-95	22	40	22		
676	**PG-272032**						ASBT-95	22	42.5	22		
677	**SK-3-5010**						ASBT-27	30	40	22		
678	**VOIL-850**						ASBT-71	25	40	26		
679	**VOIR-850**						ASBT-71	25	50.5	26		
680	**VW-1001**						ASBT-108	33	100			
681	**VW-1014**							28	108			
682	**VWIL-T5M1**						ASBT-T5M1	28	101			
683	**VWIL-T5M2**						ASBT-T5M2	30	46.8	26		
684	**VWIR-T5M1**						ASBT-T5M1	28	44.2	26		
685	**VWIR-T5M2**						ASBT-T5M2	30	44.5	26		
686	**VWIU-5016**		16-1003	4005		302229		28	108			
687	**VWIU-5021**						ASBT-108	33	100			
688	**VWIU-5023**							28	108			
689	**VWIU-B6A1**						ASBT-INB6A1	34	119			
690	**VWIU-B6M1**						ASBT-INB6M1	28	108			
691	**VWIU-G41**						ASBT-ING41	30	108			
692	**VWIU-TG**					304556	ASBT-INTG	28	112			
						KOREA						
693	**DWIU-556**							19	35	22		
694	**DWIU-845**							22	35	34		
695	**DWIU-LAC**							29	39	22		
696	**GMIU-1001**						ASBT-140	29	35	34		
697	**HYIL-ACC**							22	35	25		
698	**HYIL-SF**							25	41	27		
699	**HYIL-SF2**							26	41	27		
700	**HYIL-TER**							25	35	28		
701	**HYIL-TER2**							34	34.5	28		
702	**HYIR-ACC**							22	35	25		
703	**HYIR-SF**							25	42	26		
704	**HYIR-TER2**							34	140			
705	**HYIU-100**						ASBT-2047	19	35	22		
706	**KAIL-20S**							24	41	27		
707	**KAIL-500**							25	41	27		
708	**KAIL-900**							33	41	27		
709	**KAIL-910**											
710	**KAIL-SR**							25	42	28		
711	**KAIR-250**							23	42	26		
712	**KAIR-50S**							24	42	26		
713	**KAIR-550**							25	42	26		
714	**KAIR-750**							26	42	26		
715	**KAIR-950**							33	42	26		
716	**KAIR-SR**							25	42	28		
717	**MEIU-IST**						ASBT41-6104	35	55	30		
718	**MTIP-5024**						ASBT-21	26	35	27		
719	**MTIP-5025**						ASBT-21	26	37	27		
720	**MTIU-5026**						ASBT-33	23	35	25		
721	**MTIU-5035**						ASBT-2048	22	35	25		
722	**MZID-5022**						ASBT-66	25	35	26		
723	**MZIP-5021**						ASBT-90	25	40	26		
724	**OPIU-5004**						41-3253	22	35	34		
725	**OPIU-5005**						ASBT-2067	19	35	22		
						HONDA						

№	ASVA	HDK	METELLI	GLO	GKN	LOEBRO	CV Boot	Teeth of inner spline	Seal diameter	Teeth of outer spline	Diameter of gaps	Teeth of ABS ring
726	**HNID-5014**						ASBT-27	28	35	25		
727	**HNID-507**						ASBT-121	32	40	27		
728	**HNID-508**						ASBT-33	30	35	25		
729	**HNID-517**						ASBT-119	34	40	29		
730	**HNID-518**						ASBT-21	34	40	29		
731	**HNID-550**						ASBT-21	36	40	31		
732	**HNID-U10**						ASBT-121	32	40	27		
733	**HNIL-ACL**							32	40	29		
734	**HNIL-C7A**							28	35	25		
735	**HNIL-C7M**							28	35	25		
736	**HNIL-JZ**							28	35	25		
737	**HNIP-5015**						ASBT-27	28	35	25		
738	**HNIP-509**						ASBT-27	30	35	25		
739	**HNIP-516**						ASBT-121	32	40	27		
740	**HNIP-551**						ASBT-18	36	42	31		
741	**HNIP-A12**						ASBT-26	32	40	27		
742	**HNIP-HRVA**						ASBT-90	30	40	27		
743	**HNIP-HRVM**						ASBT-90	30	40	27		
744	**HNIP-M11**						ASBT-26	32	40	27		
745	**HNIR-507R**						ASBT-24	32	40	27		
746	**HNIR-ACL**							32	40	25		
747	**HNIU-5028**						ASBT-26	34	40	29		
748	**HNIU-521**						ASBT-26	27	35	25		
749	**HNIU-CRV**						OKBT-02	25	35	23		
750	**HNIU-HRV**							30	42.5	27		
						ISUZU						
751	**ISIL-1004**						ASBT-84	26	30	17		
752	**ISIR-1004**						ASBT-84	26	30	17		
						MAZDA						
753	**MZID-504**						ASBT-2071	25	35	26		
754	**MZID-512**						ASBT-21	26	35	28		
755	**MZID-554**						ASBT-26	32	42	35		
756	**MZ-IDMT-02**						ASBT-121	23	35	28		
757	**MZIL-GF**							30	35	28		
758	**MZIL-GG**							32	35	28		
759	**MZIL-M3**							22	35	26		
760	**MZIL-M3A2**							23	35	26		
761	**MZIL-M3M1**							22	35	24		
762	**MZIL-M3M2**							24	35	28		
763	**MZIL-M6A**							33	35	28		
764	**MZIL-M6A2**							33	35	28		
765	**MZIL-MP1**							35	35	28		
766	**MZIL-MP2**						ASBT-MP1	33	40	30		
767	**MZIP-503**						ASBT-2071	25	42	26		
768	**MZIP-511**						ASBT-2071	26	43	28		
769	**MZIP-555**						ASBT-26	32	43	28		
770	**MZ-IPAT-01**						ASBT-121	23	43	28		
771	**MZ-IPMT-03**						ASBT-121	23	43	28		
772	**MZIR-GF**							30	45	28		
773	**MZIR-GG**							33	43	28		
774	**MZIR-M3**							22	43	28		
775	**MZIR-M3A2**							23	43	26		
776	**MZIR-M3M1**							22	43	26		
777	**MZIR-M3M2**							24	43	28		
778	**MZIR-M6A**							33	43	28		
779	**MZIR-MP1**							35	43	26		
780	**MZIR-MP2**							33	43	26		
781	**MZIU-507**						ASBT-1	22	35	24		
						MITSUBISHI						
782	**MTID-4001**						ASBT-21	25	34.7	28		
783	**MTID-5002**						ASBT-21	26	34.7	28		
784	**MTID-5003**						ASBT-21	25	32	25		
785	**MTIL-CSM**							30	41	27		
786	**MTIL-H76**							29	48	34		
787	**MTIL-H77A**							32	48	34		
788	**MTIL-N84**							25	41	27		
789	**MTIN-D01**						ASBT-119	33	34.7	28		
790	**MTIN-P01**							33	110			
791	**MTIN-P02**							35	114			
792	**MTIP-5004**						ASBT-191	25	110.5			
793	**MTIP-5005**						ASBT-191	26	110.5			
794	**MTIR-088**							29	41	25		
795	**MTIR-CSM**							30	41	27		
796	**MTIR-DA1**							29	36.3	23		
797	**MTIR-GRM**							25	42	26		
798	**MTIR-H76**							29	35	25		
799	**MTIR-N84M**							24	42	26		
800	**MTIU-004**						ASBT-2048	22	35	25		
801	**MTIU-5008**						ASBT-21	30	35	25		
802	**MTIU-5022**						ASBT-26	26	41	27		
803	**MTIU-5023**						ASBT-21	26	35	25		

№	ASVA	HDK	METELLI	GLO	GKN	LOEBRO	CV Boot	Teeth of inner spline	Seal diameter	Teeth of outer spline	Diameter of gaps	Teeth of ABS ring
804	**MTIU-5032**						ASBT-128	24	35	25		
805	**MTIU-808**						ASBT-2068	30	41	25		
806	**MTIU-DAG**							23	41	25		
807	**MTIU-EA5A**						ASBT-26	24	41	27		
808	**MTIU-N94**							30	24	41		
809	**MTIU-USEA**							30	41	27		
						NISSAN						
810	**NSID-5001**						ASBT-92	27	39	29		
811	**NSID-5013**						ASBT-2114	25	40	25		
812	**NSID-TN**						ASBT-21	23	40	25		
813	**NSIL-A32**							27	39	29		
814	**NSIL-EP20**						ASBT-84	32	40	25		
815	**NSIL-J10**							33	40	27		
816	**NSIL-J10F**							30	40	26		
817	**NSIL-J10W**							33	40	27		
818	**NSIL-W11**						ASBT-100	25	40	25		
819	**NSIL-XT**							26	39	29		
820	**NSIP-5009**						ASBT-21	27	35	29		
821	**NSIP-TN**						ASBT-21	23	40	25		
822	**NSIR-EP20**						ASBT-84	32	40	25		
823	**NSIR-J10**							33	35	27		
824	**NSIR-J10F**							30	35	26		
825	**NSIR-J10W**							33	35	27		
826	**NSIR-XT**							26	88			
827	**NSIU-5031**							32	126			
828	**NSIU-5033**						ASBT-71	27	136			
829	**NSIU-626**							32	40	25		
830	**NSIU-C11X**						ASBT-INC11X	22	40	25		
831	**NSIU-EP16**						ASBT-2080	22	40	25		
832	**NSIU-JP16**						ASBT-84	23	40	25		
833	**NSIU-K12**							21	40	25		
834	**NSIU-N16**							22	40	24		
835	**NSIU-N16B**						ASBT-INN16	21	40	24		
836	**NSIU-P11E**							23	40	25		
837	**NSIU-P12**						ASBT-INP12	23	40	24		
838	**NSIU-R51**							26	45.6	27		
839	**NSIU-TER**						ASBT-71	27	136			
840	**NSIU-XTR**							24	38	21		
841	**NSIU-Y11**							27	101			
						RUSSIA						
842	**LDIN-01**						LDBT-02	22	35	24		
843	**LDIN-003**						ASBT-IN	22	40	24		
844	**LDIN-004**						ASBT-IN	22	40	24		
845	**LDIN-005**						ASBT-IN	22	40	22		
846	**LDIN-006**						ASBT-IN	22	40	22		
847	**MKIN-02**						ASBT-176	25	100			
848	**OKIN-02**						OKBT-02	19	35	20		
849	**TVIN-001**						ASBT-26	22	40	22		
						SUBARU						
850	**SBIU-1001**						ASBT-27	22	40	25		
851	**SBIU-1002**						ASBT-27	30	40.3	25		
						SUZUKI						
852	**SZIL-GV**							24	137.5			
853	**SZIR-GV**							22	40	26		
854	**SZIU-LN**							21	38	22		
						TOYOTA						
855	**TYID-5010**						ASBT-92	23	36	20		
856	**TYID-5015**						ASBT-2120	30	35	20		
857	**TYID-909**						ASBT-70	27	50	24		
858	**TYID-R4**						ASBT-70	27	50	23		
859	**TYID-RAV4**							23	44	23		
860	**TYID-ST220**							23	35	20		
861	**TYIL-911**							27	50	24		
862	**TYIL-AV20**							26	50	24		
863	**TYIL-AV24**							26	50	24		
864	**TYIP-5001**						ASBT-2120	23	35	20		
865	**TYIP-5014**						ASBT-92	30	41	20		
866	**TYIP-909**						ASBT-128	27	41	24		
867	**TYIP-R4**						ASBT-128	27	34	23		
868	**TYIP-RAV4**							23	32	23		
869	**TYIP-ST220**							23	35	20		
870	**TYIR-5226**						ASBT-92	27	35	20		
871	**TYIR-911**							27	40	24		
872	**TYIR-AV20**							26	40	24		
873	**TYIR-AV24**							26	40	24		
874	**TYIU-110**						ASBT-95	22	34	23		
875	**TYIU-220**						ASBT-95	23	34	23		
876	**TYIU-5003**							34	112			
877	**TYIU-5006**						ASBT-2114	27	35	20		
878	**TYIU-5009**						ASBT-2120	23	34	23		
879	**TYIU-5013**						ASBT-64	24	102			
880	**TYIU-5020**						ASBT-94	24	47	27		
881	**TYIU-557**						ASBT-100	26	138.5			
882	**TYIU-ARR**											
883	**TYIU-AV18**							23	35	20		

№	ASVA	HDK	METELLI	GLO	GKN	LOEBRO	CV Boot	Teeth of inner spline	Seal diameter	Teeth of outer spline	Diameter of gaps	Teeth of ABS ring
884	**TYIU-CE1**						ASBT-2120	32	34	23		
885	**TYIU-E10**							29	34	23		
886	**TYIU-GXR**							26	138.5			
887	**TYIU-HR**						ASBT-21	25	50	23		
888	**TYIU-LC100**						ASBT-INLC100	30	47	30		
889	**TYIU-P120**							30	47	30		
890	**TYIU-RAV4R**							24	76			
891	**TYIU-YAR10**							19	38	23		
892	**TYIU-YAR13**							22	34	23		
893	**TYIU-YAR15**							23	34	23		

AXELSHAFT

MODEL	ENGINE	AT/MT	CC	YEAR	YEAR	RIGHT	O.E No.R	LEFT	O.E No.L
HONDA CRV									
RD1 4WD	B20B	4AT	2000	199510	200109			HSH-001	44500-SR3-J81
RD1 4WD	B20B	4AT	2000	199812	200109			HSH-001	44500-SR3-J81
RD1 4WD	B20B	5MT	2000	199709	199812			HSH-001	44500-SR3-J81
RD1 4WD	B20B	5MT	2000	199812	200109			HSH-001	44500-SR3-J81
RD1 4WD	B20B	4AT	2000	199812	200109			HSH-001	44500-SR3-J81
CHYSLER GRAND CHEROKEE									
	4.0L	AT/MT	4000	199101	199902	CHS-001	4713192		
	4.0L	AT/MT	4000	199902	200401			CHS-002	4856333
MAZDA ATENZA/6									
GGEP	LF-DE	4AT/F	2000	200205		SHM-003	GA24-25-700		
GGEP	LF-DE	4AT/F	2000	200205		SHM-003	GA24-25-700A		
GGES	LF-DE	4AT/F	2000	200205		SHM-003	GA24-25-700B		
GGES	LF-DE	4AT/F	2000	200205		SHM-003	GA24-25-700C		
GG3P	L3-VE	4AT/F	2300	200205		SHM-003	GA24-25-700		
GG3P	L3-VE	4AT/F	2300	200205		SHM-003	GA24-25-700A		
GG3P	L3-VE	4AT/F	2300	200205		SHM-003	GA24-25-700B		
GG3P	L3-VE	4AT/F	2300	200205		SHM-003	GA24-25-700C		
MAZDA CAPELLA/626/TELSTER									
GE8P	K8	MT	1800	199110		SHM-001	G566-25-700A		
GE8P	K8	AT	1800	199110		SHM-001	G566-25-700B		
CG2PP	FP	5MT	1800	199407	199708	SHM-001	G566-25-700A		
CG2PP	FP	5MT	1800	199407	199708	SHM-001	G566-25-700B		
CG2PP	FP	4AT	1800	199407	199708	SHM-001	G566-25-700A		
CG2PP	FP	4AT	1800	199407	199708	SHM-001	G566-25-700B		
CG2PP	FP	5MT	1800	199408	199708	SHM-001	G566-25-700A		
CG2PP	FP	5MT	1800	199408	199708	SHM-001	G566-25-700B		
CG2PP	FP	5MT	1800	199408	199708	SHM-001	G566-25-700A		
CG2PP	FP	4AT	1800	199408	199708	SHM-001	G566-25-700B		
GDEPS	FE	MT	2000	198701	199101	SHM-002	G003-25-710D		
GDEPS	FE	5MT	2000	198705	199110	SHM-002	G003-25-710A		
GDFP	RF	5MT	2000	198707	199110	SHM-002	G003-25-710D		
GDFP	RF	5MT	2000	198707	199110	SHM-002	G003-25-710A		
GEEP	KF	MT	2000	199110		SHM-001	G562-25-700		
GEEP	KF	AT	2000	199110		SHM-001	G562-25-700B		
GEFP	RF	5MT	2000	199204	199407	SHM-001	G562-25-700		
GEFP	RF	5MT	2000	199204	199407	SHM-001	G562-25-700B		
GEFP	RF	4AT	2000	199204	199510	SHM-001	G562-25-700		
GEFP	RF	4AT	2000	199204	199510	SHM-001	G562-25-700B		
MAZDA MX-6									
GEESB	KF	5MT	2000	199111	199601	SHM-001	G562-25-700		
GEESB	KF	5MT	2000	199111	199601	SHM-001	G562-25-700B		
GEESB	KF	4AT	2000	199111	199601	SHM-001	G562-25-700B		
GEESB	KF	4AT	2000	199111	199601	SHM-001	G562-25-700		
NISSAN ALMERA UK									
N16	QG15DE	5MT	1500	200001	200403	NSH-006	39100-BM510	NSH-007	39101-BM510
N16	QG15DE	5MT	1500	200001	200403	NSH-006	39100-BM500	NSH-007	39101-BM500
N16	QG15DE	5MT	1500	200001	200403	NSH-006	39100-BM520	NSH-007	39101-BM520
N16E	QG15DE	5MT	1500	200403		NSH-009	39100-BM560	NSH-003	39101-BM560
N16E	QG15DE	5MT	1500	200403		NSH-009	39100-BM580	NSH-003	39101-BM560
NISSAN ALMERA JPN									
N16	QG15DE	5MT	1500	200004	200305			NSH-003	39205-8M180
N16	QG15DE	5MT	1500	200004	200305			NSH-003	39205-4M400
N16	QG15DE	5MT	1500	200004	200305			NSH-003	39205-4M480
NISSAN PRIMERA UK									
P10	GA16	MT	1600	199001	199612	NSH-002	39204-2F025	NSH-001	39204-2F026
P10	GA16	MT	1600	199001	199612	NSH-002	39204-2F025	NSH-001	39204-2F026
P10	GA16	MT	1600	199001	199612			NSH-008	39205-73J27
P11	GA16DE	MT/AT	1600	199509	200101	NSH-002	39204-2F025	NSH-001	39204-2F026
P11	GA16DE	MT/AT	1600	199509	200101	NSH-002	39204-2F025	NSH-001	39204-2F026
P11	SR20DE	MT/AT	2000	199602	200101	NSH-004	39204-2F225	NSH-005	39204-2F226
P11	CD20T	MT/AT	2000	199606	200101	NSH-004	39204-2F225	NSH-005	39204-2F226
P12E	QG16DE	5MT	1600	200112		NSH-010	39100-AU010	NSH-011	39101-AU011
NISSAN X-TRAIL									
T30	QR20DE	5MT	2000	200106		NSH-T30I	38230-8H710		
T30	YD22ETi	5MT	2200	200106	200309	NSH-T30I	38230-8H710		
T30	QR25DE	5MT	2500	200209		NSH-T30I	38230-8H710		
VAZ SAMARA									
2108	-	MT	1500	198406		LDSH-07	2108-2215092	LDSH-08	2108-2215070
2109	-	MT	1500	198706		LDSH-07	2108-2215092	LDSH-08	2108-2215070
2115	-	MT	1500	2000/06		LDSH-07	2108-2215092	LDSH-08	2108-2215070
21099	-	MT	1500	199006		LDSH-07	2108-2215092	LDSH-08	2108-2215070

VAZ 110

2110	-	MT	1500	199606		LDSH-07	2108-2215092	LDSH-08	2108-2215070

VAZ 111

2111	-	MT	1500	199806		LDSH-07	2108-2215092	LDSH-08	2108-2215070

VAZ 112

2112	-	MT	1500	200006		LDSH-07	2108-2215092	LDSH-08	2108-2215070

VAZ OKA

1111		MT	750			OKSH-002	1111-2215092	OKSH-001	1111-2215070

VAZ NIVA

2121		MT	1700			LDSH-001	2121-2215070	LDSH-001	2121-2215070
2123		MT	1700			LDSH-001	2121-2215070	LDSH-001	2121-2215070

SKODA FELICIA

I (791)	1.3	AT/MT	1300	199410	199803	SK-5-9006	6U0 407 302		
I (791)	1.6	AT/MT	1600	199410	199803	SK-5-9006	6U0 407 302		
I (791)	1.9	AT/MT	1900	199410	199803	SK-5-9006	6U0 407 302		
I Pick-Up (797)	1.3	AT/MT	1300	199706		SK-5-9006	6U0 407 302		
I Pick-Up (797)	1.6	AT/MT	1600	199706		SK-5-9006	6U0 407 302		
I Pick-Up (797)	1.9	AT/MT	1900	199706		SK-5-9006	6U0 407 302		
I SW (795)	1.3	AT/MT	1300	199507	199803	SK-5-9006	6U0 407 302		
I SW (795)	1.6	AT/MT	1300	199507	199803	SK-5-9006	6U0 407 302		
I SW (795)	1.9	AT/MT	1300	199507	199803	SK-5-9006	6U0 407 302		
II	1.3	AT/MT	1300	199803	200106	SK-5-9006	6U0 407 302		
II	1.6	AT/MT	1300	199803	200106	SK-5-9006	6U0 407 302		
II	1.9	AT/MT	1300	199803	200106	SK-5-9006	6U0 407 302		
II SW	1.3	AT/MT	1300	199803	200106	SK-5-9006	6U0 407 302		
II SW	1.6	AT/MT	1600	199803	200106	SK-5-9006	6U0 407 302		
II SW	1.9	AT/MT	1900	199803	200106	SK-5-9006	6U0 407 302		

TOYOTA LAND CRUISER/LEXUS LX

	1HZ-T	MT/AT	4200	198910	199402	TYS-02	43411-60090	TYS-01	43412-60110
J80 4WD	1HD-F	MT/AT	4200	199404		TYS-02	43411-60040	TYS-01	43412-60070
J81 4WD	1HZ-T	MT/AT	4200	198910	199402	TYS-02	43411-60090	TYS-01	43412-60110
J81 4WD	1HZ-T	MT/AT	4200	198910	199402	TYS-02	43411-60040	TYS-01	43412-60070
J80 4WD	1HD-T	MT/AT	4200	199001		TYS-02	43411-60090	TYS-01	43412-60110
J80 4WD	1HZ	MT/AT	4200	199001		TYS-02	43411-60040	TYS-01	43412-60070
J80 4WD	1HD-F	MT/AT	4200	199403		TYS-02	43411-60090	TYS-01	43412-60110
J80 4WD	1HD-F	MT/AT	4200	199404		TYS-02	43411-60040	TYS-01	43412-60070
J80G 4WD	1FZ-FE	MT/AT	4500	199208	199801	TYS-02	43411-60090	TYS-01	43412-60110
J80G 4WD	1FZ-FE	MT/AT	4500	199208	199801	TYS-02	43411-60040	TYS-01	43412-60070
J80G 4WD	1FZ-FE	MT/AT	4500	199208	199801	TYS-02	43411-60090	TYS-01	43412-60110
J80G 4WD	1FZ-FE	MT/AT	4500	199208	199801	TYS-02	43411-60040	TYS-01	43412-60070
J80G 4WD	1FZ-FE	MT/AT	4500	199402	199801	TYS-02	43411-60090	TYS-01	43412-60110

CHEVROLET

MODEL	ENGINE	AT/MT	CC	YEAR	YEAR	OUTER	O.E No.R	INNER R	O.E No.IR	INNER L	O.E No.IL
LUMINA											
	3.1L	AT	3100	199001	199112	GM-063A47	26000690				
	3.1L	AT	3100	199001	199212	GM-063A47	26000690				
	3.4L	AT	3400	199201	199212	GM-063A47	26000690				
	3.4L	MT	3400	199101	199212	GM-063A47	26000690				
CAPTIVA											
	Z20DM	AT	2000	200703		OP-ANT	937 434 17		937 434 14		937 434 13
	Z20DM	MT	2000	200703		OP-ANT	937 434 17		937 434 14		937 434 15
	Z20DMH	AT	2000	200605		OP-ANT	937 434 17		937 434 14		937 434 13
	Z20DMH	MT	2000	200605		OP-ANT	937 434 17		937 434 14		937 434 15
	Z24XE	AT	2400	200605		OP-ANT	937 434 17		937 434 14		937 434 13
	Z32SE	AT	3200	200605		OP-ANT	937 434 17		937 434 14		937 434 13

CHRYSLER

MODEL	ENGINE	AT/MT	CC	YEAR	YEAR	OUTER	O.E No.R	INNER R	O.E No.IR	INNER L	O.E No.IL
GRAND CHEROKEE											
	4.0L	AT/MT	4000	199101	199902	CH-016A54	4720380				
	4.0L	AT/MT	4000	199902	200401	CH-020A48	5012456AA				
VOYAGER											
2.0i	ECB	MT	2000	199501	200103	CH-VGRA47	04808883				199501 200103
2.4i	EDZ	MT	2400	199501	200103	CH-VGRA47	04808883				199501 200103
2.5TD	R425	MT	2500	199501	200103	CH-VGRA47	04808580				199501 200103

DRIVESHAFT

MODEL	ENGINE	AT/MT	CC	YEAR	YEAR	RIGHT	O.E No.R	LEFT	O.E No.L
BMW X5-SERIES (E53)									
X5 3.0d	M57	AT	3000	199906		BX5DR-001	31607503538	BX5DL-001	31607503537
X5 3.0i	M54	AT	3000	199906		BX5DR-001	31607503538	BX5DL-001	31607503537
X5 4.4i	M62	AT	4400	199906		BX5DR-001	31607503538	BX5DL-001	31607503537
X5 4.6is	M62	AT	4600	199906		BX5DR-001	31607503538	BX5DL-001	31607503537
CHERY TIGGO									
T11	4G63 SM4	MT	2000	200501		CHDR-002	T11-2203020CA	CHDL-001	T11-2203010BC
CHERY AMULET									
A11	SQR 480	MT	1600	200301		CHDR-004	A11-2203020AE	CHDL-003	A11-2203010AE
KIA SPORTAGE									
		MT	2000	199805	200304	CVSK-001R	0K01225500D		
MERCEDES BENZ ML (163)									
230	2.3L	AT/MT	2300	199806		ME-163PSG	1633300501	ME-163DRV	1633300401
230 CDI	2.3L CDI	AT/MT	2300	199906		ME-163PSG	1633300501	ME-163DRV	1633300401
320	3.2L	AT/MT	3200	199806		ME-163PSG	1633300501	ME-163DRV	1633300401
430	4.3L	AT/MT	4300	199906		ME-163PSG	1633300501	ME-163DRV	1633300401
MITSUBISHI MIRAGE/LANCER									
CS3A	4G92	MT	1600	200101		MTR-808	MR 953745	MTL-808	MR 953746
CS5AR	4G93	CVT	1800	200101		MTR-808	MR 580575	MTL-808	MR 580762
CS6A	4G94	AT/MT	2000	200101		MTR-808	MR 953745	MTL-808	MR 953746
CS9A	4G63	MT	2000	200101		MTR-808	MR 953745	MTL-808	MR 953746
MITSUBISHI PAJERO									
V73W 4WD	6G72	AT/F	3000	199906	200207			MT-P99D	MR 453383
V63W 4WD	6G72	AT/F	3000	200008	200207			MT-P99D	MR 453383
V63W 4WD	6G72	AT/F	3000	200208				MT-P99D	MR 453383
V73W 4WD	6G72	AT/F	3000	200208				MT-P99D	MR 453383
V73W 4WD	6G72	AT/F	3000	200208				MT-P99D	MR 453383
V68W 4WD	4M41	AT/F	3200	199906	200207			MT-P99D	MR 453383
V78W 4WD	4M41	AT/F	3200	199906	200207			MT-P99D	MR 453383
V68W/V78W	4M41	4/5MT	3200	199909				MT-P99D	MR 453383
V68W 4WD	4M41	AT/F	3200	200208				MT-P99D	MR 453383
V68W 4WD	4M41	AT/F	3200	200208				MT-P99D	MR 453383
V78W 4WD	4M41	AT/F	3200	200208				MT-P99D	MR 453383
V78W 4WD	4M41	AT/F	3200	200208				MT-P99D	MR 453383
V65W 4WD	6G74	AT/F	3500	199906	200207			MT-P99D	MR 453383
V75W 4WD	6G74	AT/F	3500	199906	200207			MT-P99D	MR 453383
V65W/V75W	6G74	4/5MT	3500	199909				MT-P99D	MR 453383
V65W 4WD	6G74	AT/F	3500	200208				MT-P99D	MR 453383
V65W 4WD	6G74	AT/F	3500	200208				MT-P99D	MR 453383
V75W 4WD	6G74	AT/F	3500	200208				MT-P99D	MR 453383
V75W 4WD	6G74	AT/F	3500	200208				MT-P99D	MR 453383
PEUGEOT 206									
	1.1L	MT	1100	199809		PG-LCT-612	3273.3L	PG-LCT-613	3272.4C
	1.4L GI	MT	1400	199810		PG-LCT-612	3273.3L	PG-LCT-613	3272.4C
	1.6L	MT	1600	199810	200012	PG-LCT-612	3273.3L	PG-LCT-613	3272.4C
RENAULT CLIO II									
1.2 (B/CB0F)	D7F 710	MT	1200	199809		RN-357A26	7700110482	RN-358A26	7700110484
1.2 (B/CB0F)	D7F 720	MT	1200	199809		RN-357A26	7700110482	RN-358A26	7700110484
1.2 (B/CB0F)	D7F 726	MT	1200	199809		RN-357A26	7700110482	RN-358A26	7700110484
1.2 16V (B/CB05)	D4F 712	MT	1200	199809		RN-357A26	7700110482	RN-358A26	7700110484
1.2 16V (B/CB05)	D4F 714	MT	1200	199809		RN-357A26	7700110482	RN-358A26	7700110484
1.4 (B/CB0C)	E7J 780	MT	1400	199809		RN-357A26	7700110482	RN-358A26	7700110484
1.4 16V (B/CB0L)	K4J 712	MT	1400	199809		RN-357A26	7700110482	RN-358A26	7700110484
1.4 16V (B/CB0L)	K4J 713	MT	1400	199809		RN-357A26	7700110482	RN-358A26	7700110484
1.4 16V (B/CB0P)	K4J 700	MT	1400	199809		RN-357A26	7700110482	RN-358A26	7700110484
1.4 16V (B/CB0P)	K4J 712	MT	1400	199809		RN-357A26	7700110482	RN-358A26	7700110484
1.4 16V (B/CB0P)	K4J 713	MT	1400	199809		RN-357A26	7700110482	RN-358A26	7700110484
1.5 dCi (B/CB07)	K9K 700	MT	1500	199809		RN-357A26	7700110482	RN-358A26	7700110484
1.5 dCi (B/CB07)	K9K 704	MT	1500	199809		RN-357A26	7700110482	RN-358A26	7700110484
1.5 dCi (B/CB08)	K9K 702	MT	1500	199809		RN-357A26	7700110482	RN-358A26	7700110484
1.6 (B/CB0D)	K7M 744	MT	1600	199809		RN-357A26	7700110482	RN-358A26	7700110484
1.6 (B/CB0D)	K7M 745	MT	1600	199809		RN-357A26	7700110482	RN-358A26	7700110484
1.6 16V (CB0T)	K4M 708	MT	1600	199809		RN-357A26	7700110482	RN-358A26	7700110484
1.6 16V (CB0T)	K4M 748	MT	1600	199809		RN-357A26	7700110482	RN-358A26	7700110484
1.9 D (B/CB0E)	F8Q 630	MT	1900	199809		RN-357A26	7700110482	RN-358A26	7700110484

DRIVESHAFT

MODEL	ENGINE	AT/MT	CC	YEAR	YEAR	RIGHT	O.E No.R	LEFT	O.E No.L
1.9 dTi (B/CB0U)	F9Q 780	MT	1900	199809		RN-357A26	7700110482	RN-358A26	7700110484
1.1 (SB0A)	D7F 720	MT	1100	199809		RN-357A26	7700110482	RN-358A26	7700110484
1.1 (SB0A)	D7F 722	MT	1100	199809		RN-357A26	7700110482	RN-358A26	7700110484
1.9 D (SB0E)	F8Q 630	MT	1400	199809		RN-357A26	7700110482	RN-358A26	7700110484
RENAULT KANGOO									
1.2 (KC0A)	D7F 710	MT	1200	199803		RN-357A26	7700110482	RN-358A26	7700110484
1.2 (KC0A)	D7F 720	MT	1200	199803		RN-357A26	7700110482	RN-358A26	7700110484
1.2 (KC0A)	D7F 722	MT	1200	199803		RN-357A26	7700110482	RN-358A26	7700110484
1.2 16V (KC05)	D4F 712	MT	1200	199803		RN-357A26	7700110482	RN-358A26	7700110484
1.2 16V (KC05)	D4F 714	MT	1200	199803		RN-357A26	7700110482	RN-358A26	7700110484
1.4 (KC0C)	E7J 780	MT	1400	199803		RN-357A26	7700110482	RN-358A26	7700110484
1.5 dCi (KC07)	K9K 700	MT	1500	199803		RN-357A26	7700110482	RN-358A26	7700110484
1.6 16V 4x4	K4M 752	MT	1600	199803		RN-357A26	7700110482	RN-358A26	7700110484
1.6 16V	K4M 752	MT	1600	199803		RN-357A26	7700110482	RN-358A26	7700110484
1.9 dCi 4x4 (KC0V)	F9Q 790	MT	1900	199803		RN-357A26	7700110482	RN-358A26	7700110484
1.9 dTi (KC0U)	F9Q 780	MT	1900	199803		RN-357A26	7700110482	RN-358A26	7700110484
D 55 1.9 (KC0D)	F8Q 662	MT	1900	199803		RN-357A26	7700110482	RN-358A26	7700110484
D 65 1.9 (KC0E)	F8Q 630	MT	1900	199803		RN-357A26	7700110482	RN-358A26	7700110484
1.2 (FC0A)	D7F 710	MT	1200	199803		RN-357A26	7700110482	RN-358A26	7700110484
1.2 (FC0A)	D7F 720	MT	1200	199803		RN-357A26	7700110482	RN-358A26	7700110484
1.2 (FC0A)	D7F 722	MT	1200	199803		RN-357A26	7700110482	RN-358A26	7700110484
1.2 16V (FC05)	D4F 712	MT	1200	199803		RN-357A26	7700110482	RN-358A26	7700110484
1.2 16V (FC05)	D4F 714	MT	1200	199803		RN-357A26	7700110482	RN-358A26	7700110484
1.4 (FC0C)	E7J 780	MT	1400	199803		RN-357A26	7700110482	RN-358A26	7700110484
1.5 dCi (FC07)	K9K 700	MT	1500	199803		RN-357A26	7700110482	RN-358A26	7700110484
1.6 16V 4x4	K4M 752	MT	1600	199803		RN-357A26	7700110482	RN-358A26	7700110484
1.6 16V	K4M 752	MT	1600	199803		RN-357A26	7700110482	RN-358A26	7700110484
1.9 dCi 4x4 (FC0V)	F9Q 790	MT	1900	199803		RN-357A26	7700110482	RN-358A26	7700110484
1.9 dTi	F9Q 780	MT	1900	199803		RN-357A26	7700110482	RN-358A26	7700110484
D 55 1.9 (FC0D)	F8Q 662	MT	1900	199803		RN-357A26	7700110482	RN-358A26	7700110484
D 65 1.9 (FC0E)	F8Q 630	MT	1900	199803		RN-357A26	7700110482	RN-358A26	7700110484
RENAULT LOGAN									
LS	K7J	5MT	1400	200409		RNDR-LOG	6,001,548,103	RNDL-LOG	6,001,548,102
LS	K7M	5MT	1600	200409		RNDR-LOG	6,001,548,103	RNDL-LOG	6,001,548,102
LS	K4M	5MT	1600	200704		RNDR-LOG	6,001,548,103	RNDL-LOG	6,001,548,102
NISSAN PRIMERA									
P11	GA16DE	5MT	1600	199606	200201	NSDR-002	39100-2F010	NSDL-001	39101-2F011
P11	QG16DE	5MT	1600	200009	200201	NSDR-002	39100-2F010	NSDL-001	39101-2F011
P11	QG18DE	5MT	1800	200009	200201	NSDR-002	39100-2F010	NSDL-001	39101-2F011
P11	GA16DE	5MT	1600	199606	200201	NSDR-004	39100-2F000	NSDL-003	39101-2F001
P11	SR20DE	5MT	2000	199606	200201	NSDR-006	39100-2F210	NSDL-005	39101-2F210
P11	SR20DE	AT/MT	2000	199606	200201	NSDR-008	39100-2F200	NSDL-007	39101-2F200
VAZ SAMARA									
2108	-	MT	1500	1984/06		LDAX-05	2108-2215010	LDAX-06	2108-2215011
2109	-	MT	1500	1987/06		LDAX-05	2108-2215010	LDAX-06	2108-2215011
2115	-	MT	1500	2000/06		LDAX-05	2108-2215010	LDAX-06	2108-2215011
21099	-	MT	1500	199006		LDAX-05	2108-2215010	LDAX-06	2108-2215011
VAZ 110									
2110	-	MT	1500	199606		LDAX-05	2108-2215010	LDAX-06	2108-2215011
VAZ 111									
2111	-	MT	1500	199806		LDAX-05	2108-2215010	LDAX-06	2108-2215011
VAZ 112									
2112	-	MT	1500	200006		LDAX-05	2108-2215010	LDAX-06	2108-2215011
VAZ OKA									
1111		MT	750			OKAX-002	1111-22150010-03	OKAX-001	1111-22150011-03
VAZ NIVA									
2121		MT	1700			LDAX-002	212130-2215010-00	LDAX-001	212130-2215011-00
2123		MT	1700			LDAX-003	212130-2215010-20	LDAX-004	212130-2215011-20
SUZUKI GRAND VITARA									
FT,GT			2000	199906		SZXR-001	44101-65DA3	SZXL-001	44102-65DA2
TOYOTA CAMRY/VISTA									
ACV30	2AZ-FE	4AT/F	2400	200109	200209	TYXP-909	43410-33240	TYXD-909	43420-48091
ACV30	2AZ-FE	4AT/F	2400	200210		TYXP-909	43410-33240	TYXD-909	43420-28030
TOYOTA RAV4									
ACA20W 4WD	1AZ-FSE	4AT/F	2000	200005		TY-R4P	43410-42060	TY-R4D	43420-42120
ACA20W 4WD	1AZ-FSE	5MT/F	2000	200005		TY-R4P	43410-42060	TY-R4D	43420-42050
ACA21W 4WD	1AZ-FSE	4AT/F	2000	200005		TY-R4P	43410-42060	TY-R4D	43420-42120
ACA21W 4WD	1AZ-FSE	5MT/F	2000	200005		TY-R4P	43410-42060	TY-R4D	43420-42050

AUDI

MODEL	ENGINE	AT/MT	CC	YEAR	YEAR	OUTER	O.E No.R	INNER R	O.E No.IR	INNER L	O.E No.IL
80											
80 (89, 89Q, 8A, B3)	1.6 D JK	AT/MT	1600	198606	199110	VW-010	321 498 099 E	VW-1014	431 498 103 CX	VW-1014	431 498 103 CX
80 (89, 89Q, 8A, B3)	1.6 PP	AT/MT	1600	198606	199110	AD-005A45	895 498 099 H				
80 (89, 89Q, 8A, B3)	1.6 PP	AT/MT	1600	198606	199110	VW-010	321 498 099 E	VW-1014	431 498 103 CX	VW-1014	431 498 103 CX
80 (89, 89Q, 8A, B3)	1.6 RN	AT/MT	1600	198606	199110	AD-005A45	895 498 099 H				
80 (89, 89Q, 8A, B3)	1.6 RN	AT/MT	1600	198606	199110	VW-010	321 498 099 E	VW-1014	431 498 103 CX	VW-1014	431 498 103 CX
80 (89, 89Q, 8A, B3)	1.6 TD RA	AT/MT	1600	198606	199110	AD-004	893 498 099 H				
80 (89, 89Q, 8A, B3)	1.6 TD SB	AT/MT	1600	198606	199110	AD-004	893 498 099 H				
80 (89, 89Q, 8A, B3)	1.8 E DZ	AT/MT	1800	198606	199110	AD-004	893 498 099 H				
80 (89, 89Q, 8A, B3)	1.8 E DZ	AT/MT	1800	198606	199110	AD-003	893 498 099 X	VW-1014	431 498 103 CX	VW-1014	431 498 103 CX
80 (89, 89Q, 8A, B3)	1.8 E quattro DZ	AT/MT	1800	198606	199110	AD-002	431 498 099 AX	VW-1014	431 498 103 CX	VW-1014	431 498 103 CX
80 (89, 89Q, 8A, B3)	1.8 E quattro DZ	AT/MT	1800	198606	199110	AD-003	893 498 099 X	VW-1014	431 498 103 CX	VW-1014	431 498 103 CX
80 (89, 89Q, 8A, B3)	1.8 E quattro DZ	AT/MT	1800	198606	199110	AD-005A45	895 498 099 H				
80 (89, 89Q, 8A, B3)	1.8 quattro SD	AT/MT	1800	198606	199110	AD-002	431 498 099 AX	VW-1014	431 498 103 CX	VW-1014	431 498 103 CX
80 (89, 89Q, 8A, B3)	1.8 quattro SD	AT/MT	1800	198606	199110	AD-003	893 498 099 X	VW-1014	431 498 103 CX	VW-1014	431 498 103 CX
80 (89, 89Q, 8A, B3)	1.8 RU	AT/MT	1800	198606	199110	AD-004	893 498 099 H				
80 (89, 89Q, 8A, B3)	1.8 RU	AT/MT	1800	198606	199110	AD-003	893 498 099 X	VW-1014	431 498 103 CX	VW-1014	431 498 103 CX
80 (89, 89Q, 8A, B3)	1.8 RU	AT/MT	1800	198606	199110	AD-005A45	895 498 099 H				
80 (89, 89Q, 8A, B3)	1.8 RU	AT/MT	1800	198606	199110	VW-010	321 498 099 E	VW-1014	431 498 103 CX	VW-1014	431 498 103 CX
80 (89, 89Q, 8A, B3)	1.8 S JN	AT/MT	1800	198606	199110	AD-004	893 498 099 H				
80 (89, 89Q, 8A, B3)	1.8 S JN	AT/MT	1800	198606	199110	AD-003	893 498 099 X	VW-1014	431 498 103 CX	VW-1014	431 498 103 CX
80 (89, 89Q, 8A, B3)	1.8 S JN	AT/MT	1800	198606	199110	VW-010	321 498 099 E	VW-1014	431 498 103 CX	VW-1014	431 498 103 CX
80 (89, 89Q, 8A, B3)	1.8 S NE	AT/MT	1800	198606	199110	AD-004	893 498 099 H				
80 (89, 89Q, 8A, B3)	1.8 S NE	AT/MT	1800	198606	199110	AD-003	893 498 099 X	VW-1014	431 498 103 CX	VW-1014	431 498 103 CX
80 (89, 89Q, 8A, B3)	1.8 S NE	AT/MT	1800	198606	199110	VW-010	321 498 099 E	VW-1014	431 498 103 CX	VW-1014	431 498 103 CX
80 (89, 89Q, 8A, B3)	1.8 S PM	AT/MT	1800	198606	199110	AD-004	893 498 099 H				
80 (89, 89Q, 8A, B3)	1.8 S PM	AT/MT	1800	198606	199110	AD-003	893 498 099 X	VW-1014	431 498 103 CX	VW-1014	431 498 103 CX
80 (89, 89Q, 8A, B3)	1.8 S PM	AT/MT	1800	198606	199110	VW-010	321 498 099 E	VW-1014	431 498 103 CX	VW-1014	431 498 103 CX
80 (89, 89Q, 8A, B3)	1.8 S quattro JN	AT/MT	1800	198606	199110	AD-002	431 498 099 AX	VW-1014	431 498 103 CX	VW-1014	431 498 103 CX
80 (89, 89Q, 8A, B3)	1.8 S quattro JN	AT/MT	1800	198606	199110	AD-003	893 498 099 X	VW-1014	431 498 103 CX	VW-1014	431 498 103 CX
80 (89, 89Q, 8A, B3)	1.8 S quattro JN	AT/MT	1800	198606	199110	AD-005A45	895 498 099 H				
80 (89, 89Q, 8A, B3)	1.8 S quattro NE	AT/MT	1800	198606	199110	AD-002	431 498 099 AX	VW-1014	431 498 103 CX	VW-1014	431 498 103 CX
80 (89, 89Q, 8A, B3)	1.8 S quattro NE	AT/MT	1800	198606	199110	AD-003	893 498 099 X	VW-1014	431 498 103 CX	VW-1014	431 498 103 CX
80 (89, 89Q, 8A, B3)	1.8 S quattro NE	AT/MT	1800	198606	199110	AD-005A45	895 498 099 H				
80 (89, 89Q, 8A, B3)	1.8 S quattro PM	AT/MT	1800	198606	199110	AD-002	431 498 099 AX	VW-1014	431 498 103 CX	VW-1014	431 498 103 CX
80 (89, 89Q, 8A, B3)	1.8 S quattro PM	AT/MT	1800	198606	199110	AD-003	893 498 099 X	VW-1014	431 498 103 CX	VW-1014	431 498 103 CX
80 (89, 89Q, 8A, B3)	1.8 S quattro PM	AT/MT	1800	198606	199110	AD-005A45	895 498 099 H				
80 (89, 89Q, 8A, B3)	1.8 S quattro SF	AT/MT	1800	198606	199110	AD-002	431 498 099 AX	VW-1014	431 498 103 CX	VW-1014	431 498 103 CX
80 (89, 89Q, 8A, B3)	1.8 S quattro SF	AT/MT	1800	198606	199110	AD-003	893 498 099 X	VW-1014	431 498 103 CX	VW-1014	431 498 103 CX
80 (89, 89Q, 8A, B3)	1.8 S SF	AT/MT	1800	198606	199110	AD-004	893 498 099 H				
80 (89, 89Q, 8A, B3)	1.8 S SF	AT/MT	1800	198606	199110	AD-003	893 498 099 X	VW-1014	431 498 103 CX	VW-1014	431 498 103 CX
80 (89, 89Q, 8A, B3)	1.8 S SF	AT/MT	1800	198606	199110	AD-005A45	895 498 099 H				
80 (89, 89Q, 8A, B3)	1.8 S SF	AT/MT	1800	198606	199110	VW-010	321 498 099 E	VW-1014	431 498 103 CX	VW-1014	431 498 103 CX
80 (89, 89Q, 8A, B3)	1.8 SD	AT/MT	1800	198606	199110	AD-004	893 498 099 H				
80 (89, 89Q, 8A, B3)	1.8 SD	AT/MT	1800	198606	199110	AD-003	893 498 099 X	VW-1014	431 498 103 CX	VW-1014	431 498 103 CX
80 (89, 89Q, 8A, B3)	1.9 D 1Y	AT/MT	1900	198606	199110	AD-005A45	895 498 099 H				
80 (89, 89Q, 8A, B3)	2.0 AAD	AT/MT	2000	198606	199110	AD-004	893 498 099 H				
80 (89, 89Q, 8A, B3)	2.0 E 16V 6A	AT/MT	2000	198606	199110	AD-004	893 498 099 H				
80 (89, 89Q, 8A, B3)	2.0 E 3A	AT/MT	2000	198606	199110	AD-004	893 498 099 H				
80 (89, 89Q, 8A, B3)	2.0 E quattro 3A	AT/MT	2000	198606	199110	AD-005A45	895 498 099 H				
80 (89, 89Q, 8A, B3)	2.0 quattro 3A	AT/MT	2000	198606	199110	AD-005A45	895 498 099 H				
80 (89, 89Q, 8A, B3)	2.0 quattro AAD	AT/MT	2000	198606	199110	AD-005A45	895 498 099 H				
80 (8C, B4)	1.6 ABM	AT/MT	1600	199109	199412	AD-004	893 498 099 H				
80 (8C, B4)	1.9 TD AAZ	AT/MT	1900	199109	199412	AD-004	893 498 099 H				
80 (8C, B4)	2.0 ABT	AT/MT	2000	199109	199412	AD-004	893 498 099 H				
80 (8C, B4)	2.0 E 16V ACE	AT/MT	2000	199109	199412	AD-004	893 498 099 H				
80 (8C, B4)	2.0 E 16V quattro ACE	AT/MT	2000	199109	199412	AD-005A45	895 498 099 H	VWIU-5021	191 498 103 C	VWIU-5021	191 498 103 C
80 (8C, B4)	2.0 E ABK	AT/MT	2000	199109	199412	AD-004	893 498 099 H				
80 (8C, B4)	2.0 E quattro ABK	AT/MT	2000	199109	199412	AD-005A45	895 498 099 H	VWIU-5021	191 498 103 C	VWIU-5021	191 498 103 C
80 (8C, B4)	S2 quattro ABY	AT/MT	2200	199109	199412	AD-1121A45	443 498 099 CX				
80 (8C, B4)	2.3 E NG (KAT)	AT/MT	2300	199109	199412	AD-004	893 498 099 H				
80 (8C, B4)	2.3 E quattro NG (KAT)	AT/MT	2300	199109	199412	AD-005A45	895 498 099 H	VWIU-5021	191 498 103 C	VWIU-5021	191 498 103 C
80 (8C, B4)	2.6 ABC	AT/MT	2600	199109	199412	AD-010A45	893 498 099 LX				
80 (8C, B4)	2.8 AAH	AT/MT	2800	199109	199412	AD-010A45	893 498 099 LX				
80 Avant (8C, B4)	2.0 ABT	AT/MT	2000	199109	199601	AD-004	893 498 099 H				
80 Avant (8C, B4)	2.0 E 16V ACE	AT/MT	2000	199109	199601	AD-004	893 498 099 H				
80 Avant (8C, B4)	2.0 E 16V quattro ACE	AT/MT	2000	199109	199601	AD-005A45	895 498 099 H				
80 Avant (8C, B4)	2.0 E 16V quattro ACE	AT/MT	2000	199109	199601	AD-1121A45	443 498 099 CX				
80 Avant (8C, B4)	2.0 E ABK	AT/MT	2000	199109	199601	AD-004	893 498 099 H				
80 Avant (8C, B4)	S2 quattro ABY	AT/MT	2200	199109	199601	AD-1121A45	443 498 099 CX				
80 Avant (8C, B4)	2.3 E NG (KAT)	AT/MT	2300	199109	199601	AD-004	893 498 099 H				
80 Avant (8C, B4)	2.3 E quattro NG (KAT)	AT/MT	2300	199109	199601	AD-005A45	895 498 099 H				
80 Avant (8C, B4)	2.3 E quattro NG (KAT)	AT/MT	2300	199109	199601	AD-1121A45	443 498 099 CX				
80 Avant (8C, B4)	2.6 ABC	AT/MT	2600	199109	199601	AD-010A45	893 498 099 LX				
80 Avant (8C, B4)	2.6 quattro ABC	AT/MT	2600	199109	199601	AD-1121A45	443 498 099 CX				
80 Avant (8C, B4)	2.8 AAH	AT/MT	2800	199109	199601	AD-010A45	893 498 099 LX				
80 Avant (8C, B4)	2.8 quattro AAH	AT/MT	2800	199109	199601	AD-1121A45	443 498 099 CX				
CABRIOLET (8G7, B4)	2.0 E ABK	AT/MT	2000	199105	200008	AD-004	893 498 099 H				
CABRIOLET (8G7, B4)	2.3 E NG (KAT)	AT/MT	2300	199105	200008	AD-004	893 498 099 H				
CABRIOLET (8G7, B4)	2.6 ABC	AT/MT	2600	199105	200008	AD-010A45	893 498 099 LX				
CABRIOLET (8G7, B4)	2.8 AAH	AT/MT	2800	199105	200008	AD-010A45	893 498 099 LX				
COUPE (89, 8B)	2.0 16 V ACE	AT/MT	2000	198810	199612	AD-004	893 498 099 H				
COUPE (89, 8B)	2.0 3A	AT/MT	2000	198810	199612	AD-004	893 498 099 H				
COUPE (89, 8B)	2.0 AAD	AT/MT	2000	198810	199612	AD-004	893 498 099 H				
COUPE (89, 8B)	2.0 ABK	AT/MT	2000	198810	199612	AD-004	893 498 099 H				
COUPE (89, 8B)	2.3 20V 7A	AT/MT	2300	198810	199612	AD-010A45	893 498 099 LX				
COUPE (89, 8B)	2.3 20V 7A	AT/MT	2300	198810	199612	AD-010A45	893 498 099 LX				
COUPE (89, 8B)	2.6 ABC	AT/MT	2600	198810	199612	AD-010A45	893 498 099 LX				
90											
90 (89, 89Q, 8A, B3)	1.6 TD RA	AT/MT	1600	198704	199109	AD-004	893 498 099 H				
90 (89, 89Q, 8A, B3)	1.6 TD SB	AT/MT	1600	198704	199109	AD-004	893 498 099 H				
90 (89, 89Q, 8A, B3)	2.0 20 V NM	AT/MT	2000	198704	199109	AD-004	893 498 099 H				
90 (89, 89Q, 8A, B3)	2.0 PS	AT/MT	2000	198704	199109	AD-004	893 498 099 H				
90 (89, 89Q, 8A, B3)	2.2 E KV	AT/MT	2200	198704	199109	AD-004	893 498 099 H				
90 (89, 89Q, 8A, B3)	2.2 E quattro KV	AT/MT	2200	198704	199109	AD-004	893 498 099 H				
90 (89, 89Q, 8A, B3)	2.2 E KV	AT/MT	2200	198704	199109	AD-003	893 498 099 X	VW-1014	431 498 103 CX	VW-1014	431 498 103 CX
90 (89, 89Q, 8A, B3)	2.2 E quattro KV	AT/MT	2200	198704	199109	AD-003	893 498 099 X	VW-1014	431 498 103 CX	VW-1014	431 498 103 CX
90 (89, 89Q, 8A, B3)	2.2 E quattro KV		2200	198704	199109	AD-005A45	895 498 099 H				
90 (89, 89Q, 8A, B3)	2.3 E 20V 7A	AT/MT	2300	198704	199109	AD-010A45	893 498 099 LX				
90 (89, 89Q, 8A, B3)	2.3 E 20V 7A	AT/MT	2300	198704	199109	AD-010A45	893 498 099 LX				
90 (89, 89Q, 8A, B3)	2.3 E quattro NG (KAT)		2300	198704	199109	AD-005A45	895 498 099 H				
90 (89, 89Q, 8A, B3)	2.3 E NG	AT/MT	2300	198704	199109	AD-004	893 498 099 H				
90 (89, 89Q, 8A, B3)	2.3 E NG (KAT)	AT/MT	2300	198704	199109	AD-004	893 498 099 H				
90 (89, 89Q, 8A, B3)	2.3 E quattro NG (KAT)	AT/MT	2300	198704	199109	AD-004	893 498 099 H				
90 (89, 89Q, 8A, B3)	2.3 E NG	AT/MT	2300	198704	199109	AD-003	893 498 099 X	VW-1014	431 498 103 CX	VW-1014	431 498 103 CX
90 (89, 89Q, 8A, B3)	2.3 E quattro NG (KAT)	AT/MT	2300	198704	199109	AD-003	893 498 099 X	VW-1014	431 498 103 CX	VW-1014	431 498 103 CX
100											
100 (44, 44Q, C3)	1.8 KAT 4B	AT/MT	1800	198208	199011	AD-002	431 498 099 AX	VW-1014	431 498 103 CX	VW-1014	431 498 103 CX
100 (44, 44Q, C3)	1.8 KAT PH	AT/MT	1800	198208	199011	AD-002	431 498 099 AX	VW-1014	431 498 103 CX	VW-1014	431 498 103 CX
100 (44, 44Q, C3)	1.8 quattro JW	AT/MT	1800	198208	199011	AD-002	431 498 099 AX	VW-1014	431 498 103 CX	VW-1014	431 498 103 CX
100 (44, 44Q, C3)	1.8 quattro NP	AT/MT	1800	198208	199011	AD-002	431 498 099 AX	VW-1014	431 498 103 CX	VW-1014	431 498 103 CX
100 (44, 44Q, C3)	1.8 quattro SH	AT/MT	1800	198208	199011	AD-002	431 498 099 AX	VW-1014	431 498 103 CX	VW-1014	431 498 103 CX

AUDI

MODEL	ENGINE	AT/MT	CC	YEAR	YEAR	OUTER	O.E No.R	INNER R	O.E No.IR	INNER L	O.E No.IL
100 (44, 44Q, C3)	1.8 DR	AT/MT	1800	198208	199011	AD-002	431 498 099 AX	VW-1014	431 498 103 CX	VW-1014	431 498 103 CX
100 (44, 44Q, C3)	1.8 DS	AT/MT	1800	198208	199011	AD-002	431 498 099 AX	VW-1014	431 498 103 CX	VW-1014	431 498 103 CX
100 (44, 44Q, C3)	1.8 JW	AT/MT	1800	198208	199011	AD-002	431 498 099 AX	VW-1014	431 498 103 CX	VW-1014	431 498 103 CX
100 (44, 44Q, C3)	1.8 NP	AT/MT	1800	198208	199011	AD-002	431 498 099 AX	VW-1014	431 498 103 CX	VW-1014	431 498 103 CX
100 (44, 44Q, C3)	1.8 RS	AT/MT	1800	198208	199011	AD-002	431 498 099 AX	VW-1014	431 498 103 CX	VW-1014	431 498 103 CX
100 (44, 44Q, C3)	1.8 SH	AT/MT	1800	198208	199011	AD-002	431 498 099 AX	VW-1014	431 498 103 CX	VW-1014	431 498 103 CX
100 (44, 44Q, C3)	1.8 quattro JW	AT/MT	1800	198208	199011	AD-1121A45	443 498 099 CX				
100 (44, 44Q, C3)	1.8 quattro KAT 4B	AT/MT	1800	198208	199011	AD-1121A45	443 498 099 CX				
100 (44, 44Q, C3)	1.8 quattro KAT PH	AT/MT	1800	198208	199011	AD-1121A45	443 498 099 CX				
100 (44, 44Q, C3)	1.8 quattro NP	AT/MT	1800	198208	199011	AD-1121A45	443 498 099 CX				
100 (44, 44Q, C3)	1.8 quattro SH	AT/MT	1800	198208	199011	AD-1121A45	443 498 099 CX				
100 (44, 44Q, C3)	1.9 WH	AT/MT	1900	198208	199011	AD-002	431 498 099 AX	VW-1014	431 498 103 CX	VW-1014	431 498 103 CX
100 (44, 44Q, C3)	2.0 KAT RT	AT/MT	2000	198208	199011	AD-002	431 498 099 AX	VW-1014	431 498 103 CX	VW-1014	431 498 103 CX
100 (44, 44Q, C3)	2.0 D CN	AT/MT	2000	198208	199011	AD-002	431 498 099 AX	VW-1014	431 498 103 CX	VW-1014	431 498 103 CX
100 (44, 44Q, C3)	2.0 D Turbo DE	AT/MT	2000	198208	199011	AD-002	431 498 099 AX	VW-1014	431 498 103 CX	VW-1014	431 498 103 CX
100 (44, 44Q, C3)	2.0 KP	AT/MT	2000	198208	199011	AD-002	431 498 099 AX	VW-1014	431 498 103 CX	VW-1014	431 498 103 CX
100 (44, 44Q, C3)	2.0 SL	AT/MT	2000	198208	199011	AD-002	431 498 099 AX	VW-1014	431 498 103 CX	VW-1014	431 498 103 CX
100 (44, 44Q, C3)	2.1 KF	AT/MT	2100	198208	199011	AD-002	431 498 099 AX	VW-1014	431 498 103 CX	VW-1014	431 498 103 CX
100 (44, 44Q, C3)	2.1 WC	AT/MT	2100	198208	199011	AD-002	431 498 099 AX	VW-1014	431 498 103 CX	VW-1014	431 498 103 CX
100 (44, 44Q, C3)	2.2 quattro KU	AT/MT	2200	198208	199011	AD-002	431 498 099 AX	VW-1014	431 498 103 CX	VW-1014	431 498 103 CX
100 (44, 44Q, C3)	2.2 E quattro PX	AT/MT	2200	198208	199011	AD-002	431 498 099 AX	VW-1014	431 498 103 CX	VW-1014	431 498 103 CX
100 (44, 44Q, C3)	2.2 E Turbo quattro MC	AT/MT	2200	198208	199011	AD-002	431 498 099 AX	VW-1014	431 498 103 CX	VW-1014	431 498 103 CX
100 (44, 44Q, C3)	2.2 KU	AT/MT	2200	198208	199011	AD-002	431 498 099 AX	VW-1014	431 498 103 CX	VW-1014	431 498 103 CX
100 (44, 44Q, C3)	2.2 KZ	AT/MT	2200	198208	199011	AD-002	431 498 099 AX	VW-1014	431 498 103 CX	VW-1014	431 498 103 CX
100 (44, 44Q, C3)	2.2 quattro KAT KU	AT/MT	2200	198208	199011	AD-1121A45	443 498 099 CX				
100 (44, 44Q, C3)	2.2 quattro KU	AT/MT	2200	198208	199011	AD-1121A45	443 498 099 CX				
100 (44, 44Q, C3)	2.2 E Turbo quattro MC	AT/MT	2200	198208	199011	AD-1121A45	443 498 099 CX				
100 (44, 44Q, C3)	2.3 E	AT/MT	2300	198208	199011	AD-002	431 498 099 AX	VW-1014	431 498 103 CX	VW-1014	431 498 103 CX
100 (44, 44Q, C3)	2.3 E NF	AT/MT	2300	198208	199011	AD-002	431 498 099 AX	VW-1014	431 498 103 CX	VW-1014	431 498 103 CX
100 (44, 44Q, C3)	2.3 E quattro NF	AT/MT	2300	198208	199011	AD-002	431 498 099 AX	VW-1014	431 498 103 CX	VW-1014	431 498 103 CX
100 (44, 44Q, C3)	2.3 E quattro NF	AT/MT	2300	198208	199011	AD-1121A45	443 498 099 CX				
100 (4A, C4)	2.0 E 16V quattro ACE	AT/MT	2000	199012	199406	AD-1121A45	443 498 099 CX				
100 (4A, C4)	2.0 E quattro AAD	AT/MT	2000	199012	199406	AD-1121A45	443 498 099 CX				
100 (4A, C4)	2.0 AAE	AT/MT	2000	199012	199406	AD-009A45	4A0 498 099 J	VW-1014	431 498 103 CX	VW-1014	431 498 103 CX
100 (4A, C4)	2.0 E AAD	AT/MT	2000	199012	199406	AD-009A45	4A0 498 099 J	VW-1014	431 498 103 CX	VW-1014	431 498 103 CX
100 (4A, C4)	2.0 E ABK	AT/MT	2000	199012	199406	AD-009A45	4A0 498 099 J	VW-1014	431 498 103 CX	VW-1014	431 498 103 CX
100 (4A, C4)	2.0 E quattro AAD	AT/MT	2000	199012	199406	AD-009A45	4A0 498 099 J	VW-1014	431 498 103 CX	VW-1014	431 498 103 CX
100 (4A, C4)	2.3 E AAR	AT/MT	2300	199012	199406	AD-009A45	4A0 498 099 J	VW-1014	431 498 103 CX	VW-1014	431 498 103 CX
100 (4A, C4)	2.3 E quattro AAR	AT/MT	2300	199012	199406	AD-009A45	4A0 498 099 J	VW-1014	431 498 103 CX	VW-1014	431 498 103 CX
100 (4A, C4)	2.4 D AAS	AT/MT	2400	199012	199406	AD-009A45	4A0 498 099 J	VW-1014	431 498 103 CX	VW-1014	431 498 103 CX
100 (4A, C4)	2.6 quattro ABC	AT/MT	2600	199012	199406	AD-1121A45	443 498 099 CX				
100 (4A, C4)	2.6 quattro ABC	AT/MT	2600	199012	199406	AD-009A45	4A0 498 099 J	VW-1014	431 498 103 CX	VW-1014	431 498 103 CX
100 (4A, C4)	2.6 ABC	AT/MT	2600	199012	199406	AD-009A45	4A0 498 099 J	VW-1014	431 498 103 CX	VW-1014	431 498 103 CX
100 (4A, C4)	2.8 E quattro AAH	AT/MT	2800	199012	199406	AD-1121A45	443 498 099 CX				
100 Avant (44, 44Q, C3)	1.8 KAT 4B	AT/MT	1800	198208	199011	AD-002	431 498 099 AX	VW-1014	431 498 103 CX	VW-1014	431 498 103 CX
100 Avant (44, 44Q, C3)	1.8 KAT PH	AT/MT	1800	198208	199011	AD-002	431 498 099 AX	VW-1014	431 498 103 CX	VW-1014	431 498 103 CX
100 Avant (44, 44Q, C3)	1.8 quattro JW	AT/MT	1800	198208	199011	AD-002	431 498 099 AX	VW-1014	431 498 103 CX	VW-1014	431 498 103 CX
100 Avant (44, 44Q, C3)	1.8 quattro NP	AT/MT	1800	198208	199011	AD-002	431 498 099 AX	VW-1014	431 498 103 CX	VW-1014	431 498 103 CX
100 Avant (44, 44Q, C3)	1.8 quattro SH	AT/MT	1800	198208	199011	AD-002	431 498 099 AX	VW-1014	431 498 103 CX	VW-1014	431 498 103 CX
100 Avant (44, 44Q, C3)	1.8 DR	AT/MT	1800	198208	199011	AD-002	431 498 099 AX	VW-1014	431 498 103 CX	VW-1014	431 498 103 CX
100 Avant (44, 44Q, C3)	1.8 JW	AT/MT	1800	198208	199011	AD-002	431 498 099 AX	VW-1014	431 498 103 CX	VW-1014	431 498 103 CX
100 Avant (44, 44Q, C3)	1.8 NP	AT/MT	1800	198208	199011	AD-002	431 498 099 AX	VW-1014	431 498 103 CX	VW-1014	431 498 103 CX
100 Avant (44, 44Q, C3)	1.8 RS	AT/MT	1800	198208	199011	AD-002	431 498 099 AX	VW-1014	431 498 103 CX	VW-1014	431 498 103 CX
100 Avant (44, 44Q, C3)	1.8 SH	AT/MT	1800	198208	199011	AD-002	431 498 099 AX	VW-1014	431 498 103 CX	VW-1014	431 498 103 CX
100 Avant (44, 44Q, C3)	1.8 quattro JW	AT/MT	1800	198208	199011	AD-1121A45	443 498 099 CX				
100 Avant (44, 44Q, C3)	1.8 quattro KAT 4B	AT/MT	1800	198208	199011	AD-1121A45	443 498 099 CX				
100 Avant (44, 44Q, C3)	1.8 quattro KAT PH	AT/MT	1800	198208	199011	AD-1121A45	443 498 099 CX				
100 Avant (44, 44Q, C3)	1.8 quattro NP	AT/MT	1800	198208	199011	AD-1121A45	443 498 099 CX				
100 Avant (44, 44Q, C3)	1.8 quattro SH	AT/MT	1800	198208	199011	AD-1121A45	443 498 099 CX				
100 Avant (44, 44Q, C3)	1.9 WH	AT/MT	1900	198208	199011	AD-002	431 498 099 AX	VW-1014	431 498 103 CX	VW-1014	431 498 103 CX
100 Avant (44, 44Q, C3)	2.0 D CN	AT/MT	2000	198208	199011	AD-002	431 498 099 AX	VW-1014	431 498 103 CX	VW-1014	431 498 103 CX
100 Avant (44, 44Q, C3)	2.0 E KAT RT	AT/MT	2000	198208	199011	AD-002	431 498 099 AX	VW-1014	431 498 103 CX	VW-1014	431 498 103 CX
100 Avant (44, 44Q, C3)	2.0 E KP	AT/MT	2000	198208	199011	AD-002	431 498 099 AX	VW-1014	431 498 103 CX	VW-1014	431 498 103 CX
100 Avant (44, 44Q, C3)	2.0 SL	AT/MT	2000	198208	199011	AD-002	431 498 099 AX	VW-1014	431 498 103 CX	VW-1014	431 498 103 CX
100 Avant (44, 44Q, C3)	2.0 TD DE	AT/MT	2000	198208	199011	AD-002	431 498 099 AX	VW-1014	431 498 103 CX	VW-1014	431 498 103 CX
100 Avant (44, 44Q, C3)	2.1 WC	AT/MT	2100	198208	199011	AD-002	431 498 099 AX	VW-1014	431 498 103 CX	VW-1014	431 498 103 CX
100 Avant (44, 44Q, C3)	2.2 quattro KU	AT/MT	2200	198208	199011	AD-002	431 498 099 AX	VW-1014	431 498 103 CX	VW-1014	431 498 103 CX
100 Avant (44, 44Q, C3)	2.2 E quattro PX	AT/MT	2200	198208	199011	AD-002	431 498 099 AX	VW-1014	431 498 103 CX	VW-1014	431 498 103 CX
100 Avant (44, 44Q, C3)	2.2 KU	AT/MT	2200	198208	199011	AD-002	431 498 099 AX	VW-1014	431 498 103 CX	VW-1014	431 498 103 CX
100 Avant (44, 44Q, C3)	2.2 KZ	AT/MT	2200	198208	199011	AD-002	431 498 099 AX	VW-1014	431 498 103 CX	VW-1014	431 498 103 CX
100 Avant (44, 44Q, C3)	2.2 Turbo quattro MC	AT/MT	2200	198208	199011	AD-002	431 498 099 AX	VW-1014	431 498 103 CX	VW-1014	431 498 103 CX
100 Avant (44, 44Q, C3)	2.2 quattro KAT KU	AT/MT	2200	198208	199011	AD-1121A45	443 498 099 CX				
100 Avant (44, 44Q, C3)	2.2 quattro KU	AT/MT	2200	198208	199011	AD-1121A45	443 498 099 CX				
100 Avant (44, 44Q, C3)	2.2 Turbo quattro MC	AT/MT	2200	198208	199011	AD-1121A45	443 498 099 CX				
100 Avant (44, 44Q, C3)	2.3	AT/MT	2300	198208	199011	AD-002	431 498 099 AX	VW-1014	431 498 103 CX	VW-1014	431 498 103 CX
100 Avant (44, 44Q, C3)	2.3 E quattro NF	AT/MT	2300	198208	199011	AD-002	431 498 099 AX	VW-1014	431 498 103 CX	VW-1014	431 498 103 CX
100 Avant (44, 44Q, C3)	2.3 NF	AT/MT	2300	198208	199011	AD-002	431 498 099 AX	VW-1014	431 498 103 CX	VW-1014	431 498 103 CX
100 Avant (44, 44Q, C3)	2.3 E quattro NF	AT/MT	2300	198208	199011	AD-1121A45	443 498 099 CX				
100 Avant (4A, C4)	2.0 E quattro AAD	AT/MT	2000	199012	199406	AD-1121A45	443 498 099 CX				
100 Avant (4A, C4)	2.0 E AAD	AT/MT	2000	199012	199406	AD-009A45	4A0 498 099 J	VW-1014	431 498 103 CX	VW-1014	431 498 103 CX
100 Avant (4A, C4)	2.0 E AAE	AT/MT	2000	199012	199406	AD-009A45	4A0 498 099 J	VW-1014	431 498 103 CX	VW-1014	431 498 103 CX
100 Avant (4A, C4)	2.0 E ABK	AT/MT	2000	199012	199406	AD-009A45	4A0 498 099 J	VW-1014	431 498 103 CX	VW-1014	431 498 103 CX
100 Avant (4A, C4)	2.0 E quattro AAD	AT/MT	2000	199012	199406	AD-009A45	4A0 498 099 J	VW-1014	431 498 103 CX	VW-1014	431 498 103 CX
100 Avant (4A, C4)	2.3 E AAR	AT/MT	2300	199012	199406	AD-009A45	4A0 498 099 J	VW-1014	431 498 103 CX	VW-1014	431 498 103 CX
100 Avant (4A, C4)	2.3 E quattro AAR	AT/MT	2300	199012	199406	AD-009A45	4A0 498 099 J	VW-1014	431 498 103 CX	VW-1014	431 498 103 CX
100 Avant (4A, C4)	2.4 D AAS	AT/MT	2400	199012	199406	AD-009A45	4A0 498 099 J	VW-1014	431 498 103 CX	VW-1014	431 498 103 CX
100 Avant (4A, C4)	2.6 quattro ABC	AT/MT	2600	199012	199406	AD-1121A45	443 498 099 CX				
100 Avant (4A, C4)	2.6 quattro ABC	AT/MT	2600	199012	199406	AD-009A45	4A0 498 099 J	VW-1014	431 498 103 CX	VW-1014	431 498 103 CX
100 Avant (4A, C4)	2.6 ABC	AT/MT	2600	199012	199406	AD-009A45	4A0 498 099 J	VW-1014	431 498 103 CX	VW-1014	431 498 103 CX
100 Avant (4A, C4)	2.8 E quattro AAH	AT/MT	2800	199012	199406	AD-1121A45	443 498 099 CX				
200											
200 (44, 44Q)	2.2 20V Turbo quattro 3B	AT/MT	2200	198306	199112	AD-1121A45	443 498 099 CX				
200 (44, 44Q)	2.2 Turbo quattro 1B	AT/MT	2200	198306	199112	AD-1121A45	443 498 099 CX				
200 (44, 44Q)	2.2 Turbo quattro MC	AT/MT	2200	198306	199112	AD-1121A45	443 498 099 CX				
200 Avant (44, 44Q)	2.2 20V Turbo quattro 3B	AT/MT	2200	198306	199112	AD-1121A45	443 498 099 CX				
200 Avant (44, 44Q)	2.2 Turbo quattro 1B	AT/MT	2200	198306	199112	AD-1121A45	443 498 099 CX				
200 Avant (44, 44Q)	2.2 Turbo quattro MC	AT/MT	2200	198306	199112	AD-1121A45	443 498 099 CX				
A2											
A2 (8Z0)	1.4		1400	200002		SK-1413	6Q0 498 099D				
A2 (8Z0)	1.4 TDI		1400	200002		SK-1414	6Q0 498 099E				
A2 (8Z0)	1.6 FSI		1600	200002		SK-1414	6Q0 498 099E				
A3											
A3 (8L1)	1.6 AEH	AT/MT	1600	199609		AD-1241	1J0 498 099 A				
A3 (8L1)	1.6 AEH	AT/MT	1600	199609		VW-029	1J0 498 099 E				
A3 (8L1)	1.6 AKL	AT/MT	1600	199609		AD-1241	1J0 498 099 A				
A3 (8L1)	1.6 AKL	AT/MT	1600	199609		VW-029	1J0 498 099 E				
A3 (8L1)	1.6 APF	AT/MT	1600	199609		AD-1241	1J0 498 099 A				
A3 (8L1)	1.6 APF	AT/MT	1600	199609		VW-029	1J0 498 099 E				
A3 (8P1)	CAXC	6MT	1400	200709		VW-B61	1K0 498 099	VWIU-5021	1K0 498 103	VWIU-5021	1K0 498 103
A3 (8P1)	BGU	5MT	1600	200305	200505	VW-B61	1K0 498 099	VWIU-5021	1K0 498 103	VWIU-5021	1K0 498 103
A3 (8P1)	BSE	5MT	1600	200506	200806	VW-B61	1K0 498 099	VWIU-5021	1K0 498 103	VWIU-5021	1K0 498 103
A3 (8P1)	BSF	5MT	1600	200506	200806	VW-B61	1K0 498 099	VWIU-5021	1K0 498 103	VWIU-5021	1K0 498 103

AUDI

MODEL	ENGINE	AT/MT	CC	YEAR	YEAR	OUTER	O.E No.R	INNER R	O.E No.IR	INNER L	O.E No.IL
A3 (8P1)	BAG	6MT	1600	200308	200405	VW-B61	1K0 498 099	VWIU-5021	1K0 498 103	VWIU-5021	1K0 498 103
A3 (8P1)	BLP	6MT	1600	200406	200412	VW-B61	1K0 498 099	VWIU-5021	1K0 498 103	VWIU-5021	1K0 498 103
A3 (8P1)	BLF	6MT	1600	200501	200709	VW-B61	1K0 498 099	VWIU-5021	1K0 498 103	VWIU-5021	1K0 498 103
A3 (8P1)	BKC	5MT	1900	200306	200605	VW-B61	1K0 498 099	VWIU-5021	1K0 498 103	VWIU-5021	1K0 498 103
A3 (8P1)	BLS	5MT	1900	200510	200806	VW-B61	1K0 498 099	VWIU-5021	1K0 498 103	VWIU-5021	1K0 498 103
A3 (8P1)	BXE	5MT	1900	200606	200806	VW-B61	1K0 498 099	VWIU-5021	1K0 498 103	VWIU-5021	1K0 498 103
A3 (8P1)	AXW	6MT	2000	200305	200405	VW-B61	1K0 498 099	VWIU-5021	1K0 498 103	VWIU-5021	1K0 498 103
A3 (8P1)	BLX	6MT	2000	200406	200501	VW-B61	1K0 498 099	VWIU-5021	1K0 498 103	VWIU-5021	1K0 498 103
A3 (8P1)	BMB	6MT	2000	200401	200501	VW-B61	1K0 498 099	VWIU-5021	1K0 498 103	VWIU-5021	1K0 498 103
A3 (8P1)	BLY	6MT	2000	200406	200511	VW-B61	1K0 498 099	VWIU-5021	1K0 498 103	VWIU-5021	1K0 498 103
A3 (8P1)	BLR	6MT	2000	200501	200511	VW-B61	1K0 498 099	VWIU-5021	1K0 498 103	VWIU-5021	1K0 498 103
A3 (8P1)	BVY	6MT	2000	200511	200701	VW-B61	1K0 498 099	VWIU-5021	1K0 498 103	VWIU-5021	1K0 498 103
A3 (8P1)	BVZ	6MT	2000	200706	200806	VW-B61	1K0 498 099	VWIU-5021	1K0 498 103	VWIU-5021	1K0 498 103
A3 (8P1)	BYT	6MT	1800	200701	200706	VW-B62	1K0 498 099 B	VWIU-B6M1	1K0 498 103 A	VWIU-B6M1	1K0 498 103 A
A3 (8P1)	BYT	6AT	1800	200701	200706	VW-B62	1K0 498 099 B	VWIU-B6M1	1K0 498 103 A	VWIU-B6M1	1K0 498 103 A
A3 (8P1)	AZV	6MT	2000	200305	200806	VW-B62	1K0 498 099 B	VWIU-B6M1	1K0 498 103 A	VWIU-B6M1	1K0 498 103 A
A3 (8P1)	BKD	6MT	2000	200305	200806	VW-B62	1K0 498 099 B	VWIU-B6M1	1K0 498 103 A	VWIU-B6M1	1K0 498 103 A
A3 (8P1)	BMM	6MT	2000	200506	200806	VW-B62	1K0 498 099 B	VWIU-B6M1	1K0 498 103 A	VWIU-B6M1	1K0 498 103 A
A3 (8P1)	BUY	6MT	2000	200606	200806		3C0 498 099	VWIU-B6M1	1K0 498 103 A	VWIU-B6M1	1K0 498 103 A
A3 (8P1)	BMN	6MT	2000	200603	200806		3C0 498 099	VWIU-B6M1	1K0 498 103 A	VWIU-B6M1	1K0 498 103 A
A3 (8P1)	AXX	AT/MT	2000	200409	200510	VW-B62	1K0 498 099 B	VWIU-B6M1	1K0 498 103 A	VWIU-B6M1	1K0 498 103 A
A3 (8P1)	BWA	AT/MT	2000	200509	200806	VW-B62	1K0 498 099 B	VWIU-B6M1	1K0 498 103 A	VWIU-B6M1	1K0 498 103 A
A3 (8P1)	BHZ	AT/MT	2000	200611	200806	VW-B62	1K0 498 099 B	VWIU-B6M1	1K0 498 103 A	VWIU-B6M1	1K0 498 103 A
A3 (8P1)	CAWB	AT/MT	2000	200802		VW-B62	1K0 498 099 B	VWIU-B6M1	1K0 498 103 A	VWIU-B6M1	1K0 498 103 A
A3 (8P1)	BSE	6AT	1600	200506	200806	VW-B61	1K0 498 099		1K0 498 103 C		1K0 498 103 C
A3 (8P1)	BGU	6AT	1600	200305	200505	VW-B61	1K0 498 099		1K0 498 103 C		1K0 498 103 C
A3 (8P1)	BSF	6AT	1600	200506	200806	VW-B61	1K0 498 099		1K0 498 103 C		1K0 498 103 C
A3 (8P1)	AXW	6AT	2000	200305	200405	VW-B61	1K0 498 099		1K0 498 103 C		1K0 498 103 C
A3 (8P1)	BLX	6AT	2000	200406	200501	VW-B61	1K0 498 099		1K0 498 103 C		1K0 498 103 C
A3 (8P1)	BMB	6AT	2000	200401	200501	VW-B61	1K0 498 099		1K0 498 103 C		1K0 498 103 C
A3 (8P1)	BLY	6AT	2000	200406	200511	VW-B61	1K0 498 099		1K0 498 103 C		1K0 498 103 C
A3 (8P1)	BLR	6AT	2000	200501	200511	VW-B61	1K0 498 099		1K0 498 103 C		1K0 498 103 C
A3 (8P1)	BVY	6AT	2000	200511	200701	VW-B61	1K0 498 099		1K0 498 103 C		1K0 498 103 C
A3 (8P1)	BVZ	6AT	2000	200511	200806	VW-B61	1K0 498 099		1K0 498 103 C		1K0 498 103 C
A3 (8P1)	BUY	6AT	2000	200606	200806		3C0 498 099	VWIU-B6A1	1K0 498 103 E	VWIU-B6A1	1K0 498 103 E
A3 (8P1)	BMN	6AT	2000	200603	200806		3C0 498 099	VWIU-B6A1	1K0 498 103 E	VWIU-B6A1	1K0 498 103 E
A3 (8P1)	CAXC	7T DSG	1400	200709		VW-B62	1K0 498 099 B		5N0 498 103		5N0 498 103
A3 (8P1) >>8P-5A072-500 >>8P-5B001-000	AZV	6T DSG	2000	200305	200806	VW-B62	1K0 498 099 B		1K0 498 104	VWIU-B6A1	1K0 498 103 E
A3 (8P1) >>8P-5A072-500 >>8P-5B001-000	BKD	6T DSG	2000	200305	200806	VW-B62	1K0 498 099 B		1K0 498 104	VWIU-B6A1	1K0 498 103 E
A3 (8P1) 8P-5A072-500>> 8P-5B001-000>>	BLS	6T DSG	1900	200510	200806	VW-B62	1K0 498 099 B	VWIU-B6A1	1K0 498 103 E	VWIU-B6A1	1K0 498 103 E
A3 (8P1) 8P-5A072-500>> 8P-5B001-000>>	BXE	6T DSG	1900	200606	200806	VW-B62	1K0 498 099 B	VWIU-B6A1	1K0 498 103 E	VWIU-B6A1	1K0 498 103 E
A3 (8P1) 8P-5A072-500>> 8P-5B001-000>>	AZV	6T DSG	2000	200305	200806	VW-B62	1K0 498 099 B	VWIU-B6A1	1K0 498 103 E	VWIU-B6A1	1K0 498 103 E
A3 (8P1) 8P-5A072-500>> 8P-5B001-000>>	BKD	6T DSG	2000	200305	200806	VW-B62	1K0 498 099 B	VWIU-B6A1	1K0 498 103 E	VWIU-B6A1	1K0 498 103 E
A3 (8P1) 8P-5A072-500>> 8P-5B001-000>>	BMM	6T DSG	2000	200506	200806	VW-B62	1K0 498 099 B	VWIU-B6A1	1K0 498 103 E	VWIU-B6A1	1K0 498 103 E
A3 (8P1) Quattro	BKD	6MT	2000	200305	200806	VW-B62	1K0 498 099 B	VWIU-B6M1	1K0 498 103 A	VWIU-B6M1	1K0 498 103 A
A3 (8P1) Quattro	BMM	6MT	2000	200506	200806	VW-B62	1K0 498 099 B	VWIU-B6M1	1K0 498 103 A	VWIU-B6M1	1K0 498 103 A
A3 (8P1) Quattro	BMN	6MT	2000	200603	200806	VW-B62	1K0 498 099 B	VWIU-B6M1	1K0 498 103 A	VWIU-B6M1	1K0 498 103 A
A3 (8P1) Quattro	BDB	6MT	3200	200307	200408	VW-B62	1K0 498 099 B	VWIU-B6M1	1K0 498 103 A	VWIU-B6M1	1K0 498 103 A
A3 (8P1) Quattro	BUB	6MT	3200	200511	200806	VW-B62	1K0 498 099 B	VWIU-B6M1	1K0 498 103 A	VWIU-B6M1	1K0 498 103 A
A3 (8P1) Quattro	BMJ	6MT	3200	200409	200510	VW-B62	1K0 498 099 B	VWIU-B6M1	1K0 498 103 A	VWIU-B6M1	1K0 498 103 A
A3 (8P1) Quattro 8P-7-084001>>	BDB	6T DSG	3200	200307	200408	VW-B62	1K0 498 099 B	VWIU-B6M1	1K0 498 103 A	VWIU-B6M1	1K0 498 103 A
A3 (8P1) Quattro 8P-7-084001>>	BMJ	6T DSG	3200	200409	200510	VW-B62	1K0 498 099 B	VWIU-B6M1	1K0 498 103 A	VWIU-B6M1	1K0 498 103 A
A3 (8P1) Quattro 8P-7-084001>>	BUB	6T DSG	3200	200511	200806	VW-B62	1K0 498 099 B	VWIU-B6M1	1K0 498 103 A	VWIU-B6M1	1K0 498 103 A
A3 (8P1) Quattro <<8P-7-084001	BDB	6T DSG	3200	200307	200408	VW-B62	1K0 498 099 B		1K0 498 103 D		1K0 498 103 D
A3 (8P1) Quattro <<8P-7-084001	BMJ	6T DSG	3200	200409	200510	VW-B62	1K0 498 099 B		1K0 498 103 D		1K0 498 103 D
A3 (8P1) Quattro <<8P-7-084001	BUB	6T DSG	3200	200511	200806	VW-B62	1K0 498 099 B		1K0 498 103 D		1K0 498 103 D
A3 Sportback (8PA)	CAXC	6MT	1400	200709		VW-B61	1K0 498 099	VWIU-5021	1K0 498 103	VWIU-5021	1K0 498 103
A3 Sportback (8PA)	BSE	5MT	1600	200506	200806	VW-B61	1K0 498 099	VWIU-5021	1K0 498 103	VWIU-5021	1K0 498 103
A3 Sportback (8PA)	BSF	5MT	1600	200506	200806	VW-B61	1K0 498 099	VWIU-5021	1K0 498 103	VWIU-5021	1K0 498 103
A3 Sportback (8PA)	BAG	6MT	1600	200308	200405	VW-B61	1K0 498 099	VWIU-5021	1K0 498 103	VWIU-5021	1K0 498 103
A3 Sportback (8PA)	BLP	6MT	1600	200406	200412	VW-B61	1K0 498 099	VWIU-5021	1K0 498 103	VWIU-5021	1K0 498 103
A3 Sportback (8PA)	BLF	6MT	1600	200501	200709	VW-B61	1K0 498 099	VWIU-5021	1K0 498 103	VWIU-5021	1K0 498 103
A3 Sportback (8PA)	BKC	5MT	1900	200306	200605	VW-B61	1K0 498 099	VWIU-5021	1K0 498 103	VWIU-5021	1K0 498 103
A3 Sportback (8PA)	BLS	5MT	1900	200510	200806	VW-B61	1K0 498 099	VWIU-5021	1K0 498 103	VWIU-5021	1K0 498 103
A3 Sportback (8PA)	BXE	5MT	1900	200606	200806	VW-B61	1K0 498 099	VWIU-5021	1K0 498 103	VWIU-5021	1K0 498 103
A3 Sportback (8PA)	AXW	6MT	2000	200305	200405	VW-B61	1K0 498 099	VWIU-5021	1K0 498 103	VWIU-5021	1K0 498 103
A3 Sportback (8PA)	BLX	6MT	2000	200406	200501	VW-B61	1K0 498 099	VWIU-5021	1K0 498 103	VWIU-5021	1K0 498 103
A3 Sportback (8PA)	BMB	6MT	2000	200401	200501	VW-B61	1K0 498 099	VWIU-5021	1K0 498 103	VWIU-5021	1K0 498 103
A3 Sportback (8PA)	BLY	6MT	2000	200406	200511	VW-B61	1K0 498 099	VWIU-5021	1K0 498 103	VWIU-5021	1K0 498 103
A3 Sportback (8PA)	BLR	6MT	2000	200501	200511	VW-B61	1K0 498 099	VWIU-5021	1K0 498 103	VWIU-5021	1K0 498 103
A3 Sportback (8PA)	BVY	6MT	2000	200511	200701	VW-B61	1K0 498 099	VWIU-5021	1K0 498 103	VWIU-5021	1K0 498 103
A3 Sportback (8PA)	BVZ	6MT	2000	200706	200806	VW-B61	1K0 498 099	VWIU-5021	1K0 498 103	VWIU-5021	1K0 498 103
A3 Sportback (8PA)	BYT	6MT	1600	200706	200706	VW-B62	1K0 498 099 B	VWIU-B6M1	1K0 498 103 A	VWIU-B6M1	1K0 498 103 A
A3 Sportback (8PA)	BYT	6AT	1800	200701	200706	VW-B62	1K0 498 099 B	VWIU-B6M1	1K0 498 103 A	VWIU-B6M1	1K0 498 103 A
A3 Sportback (8PA)	AZV	6MT	2000	200305	200806	VW-B62	1K0 498 099 B	VWIU-B6M1	1K0 498 103 A	VWIU-B6M1	1K0 498 103 A
A3 Sportback (8PA)	BKD	6MT	2000	200305	200806	VW-B62	1K0 498 099 B	VWIU-B6M1	1K0 498 103 A	VWIU-B6M1	1K0 498 103 A
A3 Sportback (8PA)	BMM	6MT	2000	200506	200806	VW-B62	1K0 498 099 B	VWIU-B6M1	1K0 498 103 A	VWIU-B6M1	1K0 498 103 A
A3 Sportback (8PA)	BUY	6MT	2000	200606	200806		3C0 498 099	VWIU-B6M1	1K0 498 103 A	VWIU-B6M1	1K0 498 103 A
A3 Sportback (8PA)	BMN	6MT	2000	200603	200806		3C0 498 099	VWIU-B6M1	1K0 498 103 A	VWIU-B6M1	1K0 498 103 A
A3 Sportback (8PA)	AXX	AT/MT	2000	200409	200510	VW-B62	1K0 498 099 B	VWIU-B6M1	1K0 498 103 A	VWIU-B6M1	1K0 498 103 A
A3 Sportback (8PA)	BWA	AT/MT	2000	200509	200806	VW-B62	1K0 498 099 B	VWIU-B6M1	1K0 498 103 A	VWIU-B6M1	1K0 498 103 A
A3 Sportback (8PA)	BHZ	AT/MT	2000	200611	200806	VW-B62	1K0 498 099 B	VWIU-B6M1	1K0 498 103 A	VWIU-B6M1	1K0 498 103 A
A3 Sportback (8PA)	CAWB	AT/MT	2000	200802		VW-B62	1K0 498 099 B	VWIU-B6M1	1K0 498 103 A	VWIU-B6M1	1K0 498 103 A
A3 Sportback (8PA)	BSE	6AT	1600	200506	200806	VW-B61	1K0 498 099		1K0 498 103 C		1K0 498 103 C
A3 Sportback (8PA)	BGU	6AT	1600	200305	200505	VW-B61	1K0 498 099		1K0 498 103 C		1K0 498 103 C
A3 Sportback (8PA)	BGU	6AT	1600	200305	200505	VW-B61	1K0 498 099		1K0 498 103 C		1K0 498 103 C
A3 Sportback (8PA)	BSE	6AT	1600	200506	200806	VW-B61	1K0 498 099		1K0 498 103 C		1K0 498 103 C
A3 Sportback (8PA)	BSF	6AT	1600	200506	200806	VW-B61	1K0 498 099		1K0 498 103 C		1K0 498 103 C
A3 Sportback (8PA)	AXW	6AT	2000	200305	200405	VW-B61	1K0 498 099		1K0 498 103 C		1K0 498 103 C
A3 Sportback (8PA)	BLX	6AT	2000	200406	200501	VW-B61	1K0 498 099		1K0 498 103 C		1K0 498 103 C
A3 Sportback (8PA)	BMB	6AT	2000	200401	200501	VW-B61	1K0 498 099		1K0 498 103 C		1K0 498 103 C
A3 Sportback (8PA)	BLY	6AT	2000	200406	200511	VW-B61	1K0 498 099		1K0 498 103 C		1K0 498 103 C

AUDI

MODEL	ENGINE	AT/MT	CC	YEAR	YEAR	OUTER	O.E No.R	INNER R	O.E No.IR	INNER L	O.E No.IL
A3 Sportback (8PA)	BLR	6AT	2000	200501	200511	VW-B61	1K0 498 099		1K0 498 103 C		1K0 498 103 C
A3 Sportback (8PA)	BVY	6AT	2000	200511	200701	VW-B61	1K0 498 099		1K0 498 103 C		1K0 498 103 C
A3 Sportback (8PA)	BVZ	6AT	2000	200511	200806	VW-B61	1K0 498 099		1K0 498 103 C		1K0 498 103 C
A3 Sportback (8PA)	BUY	6AT	2000	200606	200806		3C0 498 099	VWIU-B6A1	1K0 498 103 E	VWIU-B6A1	1K0 498 103 E
A3 Sportback (8PA)	BMN	6AT	2000	200603	200806		3C0 498 099	VWIU-B6A1	1K0 498 103 E	VWIU-B6A1	1K0 498 103 E
A3 Sportback (8PA)	CAXC	7T DSG	1400	200709		VW-B62	1K0 498 099 B		5N0 498 103		5N0 498 103
A3 Sportback (8PA) >>8P-5A072-500 >>8P-5B001-000	BKD	6T DSG	2000	200305	200806	VW-B62	1K0 498 099 B		1K0 498 104	VWIU-B6A1	1K0 498 103 E
A3 Sportback (8PA) 8P-5A072-500>> 8P-5B001-000>>	BLS	6T DSG	1900	200510	200806	VW-B62	1K0 498 099 B	VWIU-B6A1	1K0 498 103 E	VWIU-B6A1	1K0 498 103 E
A3 Sportback (8PA) 8P-5A072-500>> 8P-5B001-000>>	BXE	6T DSG	1900	200606	200806	VW-B62	1K0 498 099 B	VWIU-B6A1	1K0 498 103 E	VWIU-B6A1	1K0 498 103 E
A3 Sportback (8PA) 8P-5A072-500>> 8P-5B001-000>>	AZV	6T DSG	2000	200305	200806	VW-B62	1K0 498 099 B	VWIU-B6A1	1K0 498 103 E	VWIU-B6A1	1K0 498 103 E
A3 Sportback (8PA) 8P-5A072-500>> 8P-5B001-000>>	BKD	6T DSG	2000	200305	200806	VW-B62	1K0 498 099 B	VWIU-B6A1	1K0 498 103 E	VWIU-B6A1	1K0 498 103 E
A3 Sportback (8PA) 8P-5A072-500>> 8P-5B001-000>>	BMM	6T DSG	2000	200506	200806	VW-B62	1K0 498 099 B	VWIU-B6A1	1K0 498 103 E	VWIU-B6A1	1K0 498 103 E
A3 Sportback (8PA) >>8P-5A072-500 >>8P-5B001-000	AZV	6T DSG	2000	200305	200806	VW-B62	1K0 498 099 B		1K0 498 104	VWIU-B6A1	1K0 498 103 E
A3 Sportback (8PA) Quattro	BKD	6MT	2000	200305	200806	VW-B62	1K0 498 099 B	VWIU-B6M1	1K0 498 103 A	VWIU-B6M1	1K0 498 103 A
A3 Sportback (8PA) Quattro	BMM	6MT	2000	200506	200806	VW-B62	1K0 498 099 B	VWIU-B6M1	1K0 498 103 A	VWIU-B6M1	1K0 498 103 A
A3 Sportback (8PA) Quattro	BMN	6MT	2000	200603	200806	VW-B62	1K0 498 099 B	VWIU-B6M1	1K0 498 103 A	VWIU-B6M1	1K0 498 103 A
A3 Sportback (8PA) Quattro	BDB	6MT	3200	200307	200408	VW-B62	1K0 498 099 B	VWIU-B6M1	1K0 498 103 A	VWIU-B6M1	1K0 498 103 A
A3 Sportback (8PA) Quattro	BUB	6MT	3200	200511	200806	VW-B62	1K0 498 099 B	VWIU-B6M1	1K0 498 103 A	VWIU-B6M1	1K0 498 103 A
A3 Sportback (8PA) Quattro	BMJ	6MT	3200	200409	200510	VW-B62	1K0 498 099 B	VWIU-B6M1	1K0 498 103 A	VWIU-B6M1	1K0 498 103 A
A3 Sportback (8PA) Quattro <<8P-7-084001	BDB	6T DSG	3200	200307	200408	VW-B62	1K0 498 099 B		1K0 498 103 D		1K0 498 103 D
A3 Sportback (8PA) Quattro <<8P-7-084001	BMJ	6T DSG	3200	200409	200510	VW-B62	1K0 498 099 B		1K0 498 103 D		1K0 498 103 D
A3 Sportback (8PA) Quattro <<8P-7-084001	BUB	6T DSG	3200	200511	200806	VW-B62	1K0 498 099 B		1K0 498 103 D		1K0 498 103 D
A3 Sportback (8PA) Quattro 8P-7-084001>>	BDB	6T DSG	3200	200307	200408	VW-B62	1K0 498 099 B	VWIU-B6M1	1K0 498 103 A	VWIU-B6M1	1K0 498 103 A
A3 Sportback (8PA) Quattro 8P-7-084001>>	BMJ	6T DSG	3200	200409	200510	VW-B62	1K0 498 099 B	VWIU-B6M1	1K0 498 103 A	VWIU-B6M1	1K0 498 103 A
A3 Sportback (8PA) Quattro 8P-7-084001>>	BUB	6T DSG	3200	200511	200806	VW-B62	1K0 498 099 B	VWIU-B6M1	1K0 498 103 A	VWIU-B6M1	1K0 498 103 A
S3 (8P1)	BZC	AT/MT	2000	200702	200806	VW-B62	1K0 498 099 B	VWIU-B6M1	1K0 498 103 A	VWIU-B6M1	1K0 498 103 A
S3 Sportback (8PA)	BZC	AT/MT	2000	200702	200608	VW-B62	1K0 498 099 B	VWIU-B6M1	1K0 498 103 A	VWIU-B6M1	1K0 498 103 A
A4											
A4 (8D2, B5)	1.6 ADP	AT/MT	1600	199501	200011	AD-012A45	8D0 498 099 B	VW-1014	431 498 103 CX	VW-1014	431 498 103 CX
A4 (8D2, B5)	1.6 AHL	AT/MT	1600	199501	200011	AD-012A45	8D0 498 099 B	VW-1014	431 498 103 CX	VW-1014	431 498 103 CX
A4 (8D2, B5)	1.6 ANA	AT/MT	1600	199501	200011	AD-012A45	8D0 498 099 B	VW-1014	431 498 103 CX	VW-1014	431 498 103 CX
A4 (8D2, B5)	1.6 ARM	AT/MT	1600	199501	200011	AD-012A45	8D0 498 099 B	VW-1014	431 498 103 CX	VW-1014	431 498 103 CX
A4 (8D2, B5)	1.8	AT/MT	1800	199501	200011	AD-012A45	8D0 498 099 B	VW-1014	431 498 103 CX	VW-1014	431 498 103 CX
A4 (8D2, B5)	1.8 quattro ADR	AT/MT	1800	199501	200011	AD-012A45	8D0 498 099 B	VWIU-5021	191 498 103 C	VWIU-5021	191 498 103 C
A4 (8D2, B5)	1.8 quattro AFY	AT/MT	1800	199501	200011	AD-012A45	8D0 498 099 B	VWIU-5021	191 498 103 C	VWIU-5021	191 498 103 C
A4 (8D2, B5)	1.8 quattro APT	AT/MT	1800	199501	200011	AD-012A45	8D0 498 099 B	VWIU-5021	191 498 103 C	VWIU-5021	191 498 103 C
A4 (8D2, B5)	1.8 quattro ARG	AT/MT	1800	199501	200011	AD-012A45	8D0 498 099 B	VWIU-5021	191 498 103 C	VWIU-5021	191 498 103 C
A4 (8D2, B5)	1.8 ADR	AT/MT	1800	199501	200011	AD-012A45	8D0 498 099 B	VW-1014	431 498 103 CX	VW-1014	431 498 103 CX
A4 (8D2, B5)	1.8 AFY	AT/MT	1800	199501	200011	AD-012A45	8D0 498 099 B	VW-1014	431 498 103 CX	VW-1014	431 498 103 CX
A4 (8D2, B5)	1.8 APT	AT/MT	1800	199501	200011	AD-012A45	8D0 498 099 B	VW-1014	431 498 103 CX	VW-1014	431 498 103 CX
A4 (8D2, B5)	1.8 ARG	AT/MT	1800	199501	200011	AD-012A45	8D0 498 099 B	VW-1014	431 498 103 CX	VW-1014	431 498 103 CX
A4 (8D2, B5)	1.8 AVV	AT/MT	1800	199501	200011	AD-012A45	8D0 498 099 B	VW-1014	431 498 103 CX	VW-1014	431 498 103 CX
A4 (8D2, B5)	1.8 T AEB	AT/MT	1800	199501	200011	AD-012A45	8D0 498 099 B	VW-1014	431 498 103 CX	VW-1014	431 498 103 CX
A4 (8D2, B5)	1.8 T ANB	AT/MT	1800	199501	200011	AD-012A45	8D0 498 099 B	VW-1014	431 498 103 CX	VW-1014	431 498 103 CX
A4 (8D2, B5)	1.8 T APU	AT/MT	1800	199501	200011	AD-012A45	8D0 498 099 B	VW-1014	431 498 103 CX	VW-1014	431 498 103 CX
A4 (8D2, B5)	1.8 T ARK	AT/MT	1800	199501	200011	AD-012A45	8D0 498 099 B	VW-1014	431 498 103 CX	VW-1014	431 498 103 CX
A4 (8D2, B5)	1.8 T AWT	AT/MT	1800	199501	200011	AD-012A45	8D0 498 099 B	VW-1014	431 498 103 CX	VW-1014	431 498 103 CX
A4 (8D2, B5)	1.8 T quattro AEB	AT/MT	1800	199501	200011	AD-012A45	8D0 498 099 B	VWIU-5021	191 498 103 C	VWIU-5021	191 498 103 C
A4 (8D2, B5)	1.8 T quattro ANB	AT/MT	1800	199501	200011	AD-012A45	8D0 498 099 B	VWIU-5021	191 498 103 C	VWIU-5021	191 498 103 C
A4 (8D2, B5)	1.8 T quattro APU	AT/MT	1800	199501	200011	AD-012A45	8D0 498 099 B	VWIU-5021	191 498 103 C	VWIU-5021	191 498 103 C
A4 (8D2, B5)	1.8 T quattro ARK	AT/MT	1800	199501	200011	AD-012A45	8D0 498 099 B	VWIU-5021	191 498 103 C	VWIU-5021	191 498 103 C
A4 (8D2, B5)	1.8 T quattro AWT	AT/MT	1800	199501	200011	AD-012A45	8D0 498 099 B	VWIU-5021	191 498 103 C	VWIU-5021	191 498 103 C
A4 (8D2, B5)	1.9 TDI 1Z	AT/MT	1900	199501	200011	AD-012A45	8D0 498 099 B	VW-1014	431 498 103 CX	VW-1014	431 498 103 CX
A4 (8D2, B5)	1.9 TDI AFF	AT/MT	1900	199501	200011	AD-012A45	8D0 498 099 B	VW-1014	431 498 103 CX	VW-1014	431 498 103 CX
A4 (8D2, B5)	1.9 TDI AFN	AT/MT	1900	199501	200011	AD-012A45	8D0 498 099 B	VW-1014	431 498 103 CX	VW-1014	431 498 103 CX
A4 (8D2, B5)	1.9 TDI AHH	AT/MT	1900	199501	200011	AD-012A45	8D0 498 099 B	VW-1014	431 498 103 CX	VW-1014	431 498 103 CX
A4 (8D2, B5)	1.9 TDI AHU	AT/MT	1900	199501	200011	AD-012A45	8D0 498 099 B	VW-1014	431 498 103 CX	VW-1014	431 498 103 CX
A4 (8D2, B5)	1.9 TDI AVG	AT/MT	1900	199501	200011	AD-012A45	8D0 498 099 B	VW-1014	431 498 103 CX	VW-1014	431 498 103 CX
A4 (8D2, B5)	2.6 ABC	AT/MT	2600	199501	200011	AD-011A45	4D0 498 099				
A4 (8D2, B5)	2.8 AAH	AT/MT	2800	199501	200011	AD-011A45	4D0 498 099				
A4 (8D2, B5)	2.8 ACK	AT/MT	2800	199501	200011	AD-011A45	4D0 498 099				
A4 (8D2, B5)	2.8 ALG	AT/MT	2800	199501	200011	AD-011A45	4D0 498 099				
A4 (8D2, B5)	2.8 AMX	AT/MT	2800	199501	200011	AD-011A45	4D0 498 099				
A4 (8D2, B5)	2.8 APR	AT/MT	2800	199501	200011	AD-011A45	4D0 498 099				
A4 (8D2, B5)	2.8 AQD	AT/MT	2800	199501	200011	AD-011A45	4D0 498 099				
A4 Avant (8D5, B5)	1.6 ADP	AT/MT	1600	199507	200109	AD-012A45	8D0 498 099 B	VW-1014	431 498 103 CX	VW-1014	431 498 103 CX
A4 Avant (8D5, B5)	1.6 AHL	AT/MT	1600	199507	200109	AD-012A45	8D0 498 099 B	VW-1014	431 498 103 CX	VW-1014	431 498 103 CX
A4 Avant (8D5, B5)	1.6 ANA	AT/MT	1600	199507	200109	AD-012A45	8D0 498 099 B	VW-1014	431 498 103 CX	VW-1014	431 498 103 CX
A4 Avant (8D5, B5)	1.6 ARM	AT/MT	1600	199507	200109	AD-012A45	8D0 498 099 B	VW-1014	431 498 103 CX	VW-1014	431 498 103 CX
A4 Avant (8D5, B5)	1.8 quattro ADR	AT/MT	1800	199507	200109	AD-012A45	8D0 498 099 B	VWIU-5021	191 498 103 C	VWIU-5021	191 498 103 C
A4 Avant (8D5, B5)	1.8 quattro AFY	AT/MT	1800	199507	200109	AD-012A45	8D0 498 099 B	VWIU-5021	191 498 103 C	VWIU-5021	191 498 103 C
A4 Avant (8D5, B5)	1.8 quattro APT	AT/MT	1800	199507	200109	AD-012A45	8D0 498 099 B	VWIU-5021	191 498 103 C	VWIU-5021	191 498 103 C
A4 Avant (8D5, B5)	1.8 quattro ARG	AT/MT	1800	199507	200109	AD-012A45	8D0 498 099 B	VWIU-5021	191 498 103 C	VWIU-5021	191 498 103 C
A4 Avant (8D5, B5)	1.8 ADR	AT/MT	1800	199507	200109	AD-012A45	8D0 498 099 B	VW-1014	431 498 103 CX	VW-1014	431 498 103 CX
A4 Avant (8D5, B5)	1.8 AFY	AT/MT	1800	199507	200109	AD-012A45	8D0 498 099 B	VW-1014	431 498 103 CX	VW-1014	431 498 103 CX
A4 Avant (8D5, B5)	1.8 APT	AT/MT	1800	199507	200109	AD-012A45	8D0 498 099 B	VW-1014	431 498 103 CX	VW-1014	431 498 103 CX
A4 Avant (8D5, B5)	1.8 ARG	AT/MT	1800	199507	200109	AD-012A45	8D0 498 099 B	VW-1014	431 498 103 CX	VW-1014	431 498 103 CX
A4 Avant (8D5, B5)	1.8 AVV	AT/MT	1800	199507	200109	AD-012A45	8D0 498 099 B	VW-1014	431 498 103 CX	VW-1014	431 498 103 CX
A4 Avant (8D5, B5)	1.8 T AEB	AT/MT	1800	199507	200109	AD-012A45	8D0 498 099 B	VW-1014	431 498 103 CX	VW-1014	431 498 103 CX
A4 Avant (8D5, B5)	1.8 T ANB	AT/MT	1800	199507	200109	AD-012A45	8D0 498 099 B	VW-1014	431 498 103 CX	VW-1014	431 498 103 CX
A4 Avant (8D5, B5)	1.8 T APU	AT/MT	1800	199507	200109	AD-012A45	8D0 498 099 B	VW-1014	431 498 103 CX	VW-1014	431 498 103 CX
A4 Avant (8D5, B5)	1.8 T ARK	AT/MT	1800	199507	200109	AD-012A45	8D0 498 099 B	VW-1014	431 498 103 CX	VW-1014	431 498 103 CX
A4 Avant (8D5, B5)	1.8 T AWT	AT/MT	1800	199507	200109	AD-012A45	8D0 498 099 B	VW-1014	431 498 103 CX	VW-1014	431 498 103 CX
A4 Avant (8D5, B5)	1.8 T quattro AEB	AT/MT	1800	199507	200109	AD-012A45	8D0 498 099 B	VWIU-5021	191 498 103 C	VWIU-5021	191 498 103 C
A4 Avant (8D5, B5)	1.8 T quattro ANB	AT/MT	1800	199507	200109	AD-012A45	8D0 498 099 B	VWIU-5021	191 498 103 C	VWIU-5021	191 498 103 C
A4 Avant (8D5, B5)	1.8 T quattro APU	AT/MT	1800	199507	200109	AD-012A45	8D0 498 099 B	VWIU-5021	191 498 103 C	VWIU-5021	191 498 103 C
A4 Avant (8D5, B5)	1.8 T quattro ARK	AT/MT	1800	199507	200109	AD-012A45	8D0 498 099 B	VWIU-5021	191 498 103 C	VWIU-5021	191 498 103 C
A4 Avant (8D5, B5)	1.8 T quattro AWT	AT/MT	1800	199507	200109	AD-012A45	8D0 498 099 B	VWIU-5021	191 498 103 C	VWIU-5021	191 498 103 C
A4 Avant (8D5, B5)	1.9 Di AFF	AT/MT	1900	199507	200109	AD-012A45	8D0 498 099 B	VW-1014	431 498 103 CX	VW-1014	431 498 103 CX
A4 Avant (8D5, B5)	1.9 TDI 1Z	AT/MT	1900	199507	200109	AD-012A45	8D0 498 099 B	VW-1014	431 498 103 CX	VW-1014	431 498 103 CX
A4 Avant (8D5, B5)	1.9 TDI AFN	AT/MT	1900	199507	200109	AD-012A45	8D0 498 099 B	VW-1014	431 498 103 CX	VW-1014	431 498 103 CX
A4 Avant (8D5, B5)	1.9 TDI AHH	AT/MT	1900	199507	200109	AD-012A45	8D0 498 099 B	VW-1014	431 498 103 CX	VW-1014	431 498 103 CX

AUDI

MODEL	ENGINE	AT/MT	CC	YEAR	YEAR	OUTER	O.E No.R	INNER R	O.E No.IR	INNER L	O.E No.IL
A4 Avant (8D5, B5)	1.9 TDI AHU	AT/MT	1900	199507	200109	AD-012A45	8D0 498 099 B	VW-1014	431 498 103 CX	VW-1014	431 498 103 CX
A4 Avant (8D5, B5)	1.9 TDI AVG	AT/MT	1900	199507	200109	AD-012A45	8D0 498 099 B	VW-1014	431 498 103 CX	VW-1014	431 498 103 CX
A4 Avant (8D5, B5)	2.6 ABC	AT/MT	2600	199507	200109	AD-011A45	4D0 498 099				
A4 Avant (8D5, B5)	2.8 AAH	AT/MT	2800	199507	200109	AD-011A45	4D0 498 099				
A4 Avant (8D5, B5)	2.8 ACK	AT/MT	2800	199507	200109	AD-011A45	4D0 498 099				
A4 Avant (8D5, B5)	2.8 ALG	AT/MT	2800	199507	200109	AD-011A45	4D0 498 099				
A4 Avant (8D5, B5)	2.8 AMX	AT/MT	2800	199507	200109	AD-011A45	4D0 498 099				
A4 Avant (8D5, B5)	2.8 APR	AT/MT	2800	199507	200109	AD-011A45	4D0 498 099				
A4 Avant (8D5, B5)	2.8 AQD	AT/MT	2800	199507	200109	AD-011A45	4D0 498 099				
						A6					
A6 (4A, C4)	1.9 TDI 1Z	AT/MT	1900	199406	199702	AD-009A45	4A0 498 099 J				
A6 (4A, C4)	1.9 TDI AHU	AT/MT	1900	199406	199702	AD-009A45	4A0 498 099 J				
A6 (4A, C4)	2.0 16V quattro ACE	AT/MT	2000	199406	199702	AD-1121A45	443 498 099 CX				
A6 (4A, C4)	2.0 16V ACE	AT/MT	2000	199406	199702	AD-009A45	4A0 498 099 J	VW-1014	431 498 103 C	VW-1014	431 498 103 C
A6 (4A, C4)	2.0 16V quattro ACE	AT/MT	2000	199406	199702	AD-009A45	4A0 498 099 J				
A6 (4A, C4)	2.0 AAE	AT/MT	2000	199406	199702	AD-009A45	4A0 498 099 J	VW-1014	431 498 103 C	VW-1014	431 498 103 C
A6 (4A, C4)	2.0 ABK	AT/MT	2000	199406	199702	AD-009A45	4A0 498 099 J	VW-1014	431 498 103 C	VW-1014	431 498 103 C
A6 (4A, C4)	S6 Turbo quattro AAN	AT/MT	2200	199406	199702	AD-1121A45	443 498 099 CX	VW-1014	431 498 103 C	VW-1014	431 498 103 C
A6 (4A, C4)	2.3 AAR	AT/MT	2300	199406	199702	AD-009A45	4A0 498 099 J	VW-1014	431 498 103 C	VW-1014	431 498 103 C
A6 (4A, C4)	2.6 quattro ABC	AT/MT	2600	199406	199702	AD-1121A45	443 498 099 CX				
A6 (4A, C4)	2.6 quattro ABC	AT/MT	2600	199406	199702	AD-009A45	4A0 498 099 J				
A6 (4A, C4)	2.6 ABC	AT/MT	2600	199406	199702	AD-009A45	4A0 498 099 J				
A6 (4A, C4)	2.8 quattro AAH	AT/MT	2800	199406	199702	AD-1121A45	443 498 099 CX	VW-1014	431 498 103 C	VW-1014	431 498 103 C
A6 (4A, C4)	2.8 quattro AEJ	AT/MT	2800	199406	199702	AD-1121A45	443 498 099 CX				
A6 (4B, C5)	1.8 AFY	AT/MT	1800	199701	200005	AD-012A45	8D0 498 099 B	VW-1014	431 498 103 CX	VW-1014	431 498 103 CX
A6 (4B, C5)	1.8 AJP	AT/MT	1800	199701	199907	AD-012A45	8D0 498 099 B	VW-1014	431 498 103 CX	VW-1014	431 498 103 CX
A6 (4B, C5)	1.8 AQE	AT/MT	1800	199701	200104	AD-012A45	8D0 498 099 B	VW-1014	431 498 103 CX	VW-1014	431 498 103 CX
A6 (4B, C5)	1.8 ARH	AT/MT	1800	199701	200104	AD-012A45	8D0 498 099 B	VW-1014	431 498 103 CX	VW-1014	431 498 103 CX
A6 (4B, C5)	1.8 T AEB	AT/MT	1800	199701	199901	AD-012A45	8D0 498 099 B	VW-1014	431 498 103 CX	VW-1014	431 498 103 CX
A6 (4B, C5)	1.8 T ANB	AT/MT	1800	199701	200105	AD-012A45	8D0 498 099 B	VW-1014	431 498 103 CX	VW-1014	431 498 103 CX
A6 (4B, C5)	1.8 T APU	AT/MT	1800	199701	200106	AD-012A45	8D0 498 099 B	VW-1014	431 498 103 CX	VW-1014	431 498 103 CX
A6 (4B, C5)	1.8 T ARK	AT/MT	1800	199701	199905	AD-012A45	8D0 498 099 B	VW-1014	431 498 103 CX	VW-1014	431 498 103 CX
A6 (4B, C5)	1.8 T AWT	AT/MT	1800	199701	200501	AD-012A45	8D0 498 099 B	VW-1014	431 498 103 CX	VW-1014	431 498 103 CX
A6 (4B, C5)	1.9 TDI AFN	AT/MT	1900	199701	200104	AD-011A45	4D0 498 099				
A6 (4B, C5)	2.4 quattro AGA	AT/MT	2400	199701	199901	AD-011A45	4D0 498 099	ADIU-A61	4B0 498 103	ADIU-A61	4B0 498 103
A6 (4B, C5)	2.4 quattro ALF	AT/MT	2400	199701	200109	AD-011A45	4D0 498 099	ADIU-A61	4B0 498 103	ADIU-A61	4B0 498 103
A6 (4B, C5)	2.4 quattro AML	AT/MT	2400	199701	200105	AD-011A45	4D0 498 099	ADIU-A61	4B0 498 103	ADIU-A61	4B0 498 103
A6 (4B, C5)	2.4 quattro APS	AT/MT	2400	199701	200105	AD-011A45	4D0 498 099	ADIU-A61	4B0 498 103	ADIU-A61	4B0 498 103
A6 (4B, C5)	2.4 quattro ARJ	AT/MT	2400	199701	200109	AD-011A45	4D0 498 099	ADIU-A61	4B0 498 103	ADIU-A61	4B0 498 103
A6 (4B, C5)	2.4 AGA	AT/MT	2400	199701	199901	AD-011A45	4D0 498 099				
A6 (4B, C5)	2.4 ALF	AT/MT	2400	199701	200109	AD-011A45	4D0 498 099				
A6 (4B, C5)	2.4 ALW	AT/MT	2400	199701	199901	AD-011A45	4D0 498 099				
A6 (4B, C5)	2.4 AML	AT/MT	2400	199701	200105	AD-011A45	4D0 498 099				
A6 (4B, C5)	2.4 APC	AT/MT	2400	199701	200105	AD-011A45	4D0 498 099				
A6 (4B, C5)	2.4 APS	AT/MT	2400	199701	200105	AD-011A45	4D0 498 099				
A6 (4B, C5)	2.4 ARJ	AT/MT	2400	199701	200109	AD-011A45	4D0 498 099				
A6 (4B, C5)	2.4 ARN	AT/MT	2400	199701	200005	AD-011A45	4D0 498 099				
A6 (4B, C5)	2.4 ASM	AT/MT	2400	199701	200501	AD-011A45	4D0 498 099				
A6 (4B, C5)	2.5 TDI AFB	AT/MT	2500	199701	199807	AD-011A45	4D0 498 099				
A6 (4B, C5)	2.5 TDI AKN	AT/MT	2500	199701	199907	AD-011A45	4D0 498 099				
A6 (4B, C5)	2.5 TDI quattro AFB	AT/MT	2500	199701	199807	AD-011A45	4D0 498 099	ADIU-A61	4B0 498 103	ADIU-A61	4B0 498 103
A6 (4B, C5)	2.5 TDI quattro AKN	AT/MT	2500	199701	199907	AD-011A45	4D0 498 099	ADIU-A61	4B0 498 103	ADIU-A61	4B0 498 103
A6 (4B, C5)	2.7 T AJK	AT/MT	2700	199701	200008	AD-011A45	4D0 498 099				
A6 (4B, C5)	2.7 T quattro AJK	AT/MT	2700	199701	200008	AD-011A45	4D0 498 099	ADIU-A61	4B0 498 103	ADIU-A61	4B0 498 103
A6 (4B, C5)	2.8 quattro ACK	AT/MT	2800	199701	199807	AD-011A45	4D0 498 099	ADIU-A61	4B0 498 103	ADIU-A61	4B0 498 103
A6 (4B, C5)	2.8 quattro ALG	AT/MT	2800	199701	199901	AD-011A45	4D0 498 099	ADIU-A61	4B0 498 103	ADIU-A61	4B0 498 103
A6 (4B, C5)	2.8 quattro AMX	AT/MT	2800	199701	200105	AD-011A45	4D0 498 099	ADIU-A61	4B0 498 103	ADIU-A61	4B0 498 103
A6 (4B, C5)	2.8 quattro APR	AT/MT	2800	199701	200105	AD-011A45	4D0 498 099	ADIU-A61	4B0 498 103	ADIU-A61	4B0 498 103
A6 (4B, C5)	2.8 quattro AQD	AT/MT	2800	199701	200105	AD-011A45	4D0 498 099	ADIU-A61	4B0 498 103	ADIU-A61	4B0 498 103
A6 (4B, C5)	2.8 ACK	AT/MT	2800	199701	199901	AD-011A45	4D0 498 099				
A6 (4B, C5)	2.8 AGE	AT/MT	2800	199701	200105	AD-011A45	4D0 498 099				
A6 (4B, C5)	2.8 ALG	AT/MT	2800	199701	199901	AD-011A45	4D0 498 099				
A6 (4B, C5)	2.8 AMX	AT/MT	2800	199701	200105	AD-011A45	4D0 498 099				
A6 (4B, C5)	2.8 APR	AT/MT	2800	199701	200105	AD-011A45	4D0 498 099				
A6 (4B, C5)	2.8 AQD	AT/MT	2800	199701	200105	AD-011A45	4D0 498 099				
A6 Avant (4A, C4)	1.9 TDI 1Z	AT/MT	1900	199406	199712	AD-009A45	4A0 498 099 J				
A6 Avant (4A, C4)	1.9 TDI AHU	AT/MT	1900	199406	199712	AD-009A45	4A0 498 099 J				
A6 Avant (4A, C4)	2.0 16V quattro ACE	AT/MT	2000	199406	199712	AD-1121A45	443 498 099 CX				
A6 Avant (4A, C4)	2.0 16V ACE	AT/MT	2000	199406	199712	AD-009A45	4A0 498 099 J	VW-1014	431 498 103 C	VW-1014	431 498 103 C
A6 Avant (4A, C4)	2.0 16V quattro ACE	AT/MT	2000	199406	199712	AD-009A45	4A0 498 099 J				
A6 Avant (4A, C4)	2.0 AAE	AT/MT	2000	199406	199712	AD-009A45	4A0 498 099 J	VW-1014	431 498 103 C	VW-1014	431 498 103 C
A6 Avant (4A, C4)	2.0 ABK	AT/MT	2000	199406	199712	AD-009A45	4A0 498 099 J	VW-1014	431 498 103 C	VW-1014	431 498 103 C
A6 Avant (4A, C4)	S6 Turbo quattro AAN	AT/MT	2200	199406	199712	AD-1121A45	443 498 099 CX	VW-1014	431 498 103 C	VW-1014	431 498 103 C
A6 Avant (4A, C4)	2.3 AAR	AT/MT	2300	199406	199712	AD-009A45	4A0 498 099 J	VW-1014	431 498 103 C	VW-1014	431 498 103 C
A6 Avant (4A, C4)	2.6 quattro ABC	AT/MT	2600	199406	199712	AD-1121A45	443 498 099 CX				
A6 Avant (4A, C4)	2.6 quattro ABC	AT/MT	2600	199406	199712	AD-009A45	4A0 498 099 J				
A6 Avant (4A, C4)	2.6 ABC	AT/MT	2600	199406	199712	AD-009A45	4A0 498 099 J				
A6 Avant (4A, C4)	2.8 quattro AAH	AT/MT	2800	199406	199712	AD-1121A45	443 498 099 CX	VW-1014	431 498 103 C	VW-1014	431 498 103 C
A6 Avant (4A, C4)	2.8 quattro AEJ	AT/MT	2800	199406	199712	AD-1121A45	443 498 099 CX				
A6 Avant (4B, C5)	1.8 AFY	AT/MT	1800	199712	200005	AD-012A45	8D0 498 099 B	VW-1014	431 498 103 CX	VW-1014	431 498 103 CX
A6 Avant (4B, C5)	1.8 AJP	AT/MT	1800	199712	199907	AD-012A45	8D0 498 099 B	VW-1014	431 498 103 CX	VW-1014	431 498 103 CX
A6 Avant (4B, C5)	1.8 AQE	AT/MT	1800	199712	200104	AD-012A45	8D0 498 099 B	VW-1014	431 498 103 CX	VW-1014	431 498 103 CX
A6 Avant (4B, C5)	1.8 ARH	AT/MT	1800	199712	200104	AD-012A45	8D0 498 099 B	VW-1014	431 498 103 CX	VW-1014	431 498 103 CX
A6 Avant (4B, C5)	1.8 T AEB	AT/MT	1800	199712	199901	AD-012A45	8D0 498 099 B	VW-1014	431 498 103 CX	VW-1014	431 498 103 CX
A6 Avant (4B, C5)	1.8 T ANB	AT/MT	1800	199712	200105	AD-012A45	8D0 498 099 B	VW-1014	431 498 103 CX	VW-1014	431 498 103 CX
A6 Avant (4B, C5)	1.8 T APU	AT/MT	1800	199712	200106	AD-012A45	8D0 498 099 B	VW-1014	431 498 103 CX	VW-1014	431 498 103 CX
A6 Avant (4B, C5)	1.8 T ARK	AT/MT	1800	199712	199905	AD-012A45	8D0 498 099 B	VW-1014	431 498 103 CX	VW-1014	431 498 103 CX
A6 Avant (4B, C5)	1.8 T AWT	AT/MT	1800	199712	200501	AD-012A45	8D0 498 099 B	VW-1014	431 498 103 CX	VW-1014	431 498 103 CX
A6 Avant (4B, C5)	1.9 TDI AFN	AT/MT	1900	199712	200104	AD-011A45	4D0 498 099				
A6 Avant (4B, C5)	2.4 quattro AGA	AT/MT	2400	199712	199901	AD-011A45	4D0 498 099	ADIU-A61	4B0 498 103	ADIU-A61	4B0 498 103
A6 Avant (4B, C5)	2.4 quattro ALF	AT/MT	2400	199712	200109	AD-011A45	4D0 498 099	ADIU-A61	4B0 498 103	ADIU-A61	4B0 498 103
A6 Avant (4B, C5)	2.4 quattro AML	AT/MT	2400	199712	200105	AD-011A45	4D0 498 099	ADIU-A61	4B0 498 103	ADIU-A61	4B0 498 103
A6 Avant (4B, C5)	2.4 quattro APS	AT/MT	2400	199712	200105	AD-011A45	4D0 498 099	ADIU-A61	4B0 498 103	ADIU-A61	4B0 498 103

AUDI

MODEL	ENGINE	AT/MT	CC	YEAR	YEAR	OUTER	O.E No.R	INNER R	O.E No.IR	INNER L	O.E No.IL
A6 Avant (4B, C5)	2.4 quattro ARJ	AT/MT	2400	199712	200109	AD-011A45	4D0 498 099	ADIU-A61	4B0 498 103	ADIU-A61	4B0 498 103
A6 Avant (4B, C5)	2.4 AGA	AT/MT	2400	199712	199901	AD-011A45	4D0 498 099				
A6 Avant (4B, C5)	2.4 ALF	AT/MT	2400	199712	200109	AD-011A45	4D0 498 099				
A6 Avant (4B, C5)	2.4 ALW	AT/MT	2400	199712	199901	AD-011A45	4D0 498 099				
A6 Avant (4B, C5)	2.4 AML	AT/MT	2400	199712	200105	AD-011A45	4D0 498 099				
A6 Avant (4B, C5)	2.4 APC	AT/MT	2400	199712	200105	AD-011A45	4D0 498 099				
A6 Avant (4B, C5)	2.4 APS	AT/MT	2400	199712	200105	AD-011A45	4D0 498 099				
A6 Avant (4B, C5)	2.4 ARJ	AT/MT	2400	199712	200109	AD-011A45	4D0 498 099				
A6 Avant (4B, C5)	2.4 ARN	AT/MT	2400	199712	200005	AD-011A45	4D0 498 099				
A6 Avant (4B, C5)	2.4 ASM	AT/MT	2400	199712	200501	AD-011A45	4D0 498 099				
A6 Avant (4B, C5)	2.5 TDI AFB	AT/MT	2500	199712	199807	AD-011A45	4D0 498 099				
A6 Avant (4B, C5)	2.5 TDI AKN	AT/MT	2500	199712	199907	AD-011A45	4D0 498 099				
A6 Avant (4B, C5)	2.5 TDI quattro AFB	AT/MT	2500	199712	199807	AD-011A45	4D0 498 099	ADIU-A61	4B0 498 103	ADIU-A61	4B0 498 103
A6 Avant (4B, C5)	2.5 TDI quattro AKN	AT/MT	2500	199712	199907	AD-011A45	4D0 498 099	ADIU-A61	4B0 498 103	ADIU-A61	4B0 498 103
A6 Avant (4B, C5)	2.7 T AJK	AT/MT	2700	199712	200008	AD-011A45	4D0 498 099				
A6 Avant (4B, C5)	2.7 T quattro AJK	AT/MT	2700	199712	200008	AD-011A45	4D0 498 099	ADIU-A61	4B0 498 103	ADIU-A61	4B0 498 103
A6 Avant (4B, C5)	2.8 quattro ACK	AT/MT	2800	199712	199807	AD-011A45	4D0 498 099	ADIU-A61	4B0 498 103	ADIU-A61	4B0 498 103
A6 Avant (4B, C5)	2.8 quattro ALG	AT/MT	2800	199712	199901	AD-011A45	4D0 498 099	ADIU-A61	4B0 498 103	ADIU-A61	4B0 498 103
A6 Avant (4B, C5)	2.8 quattro AMX	AT/MT	2800	199712	200105	AD-011A45	4D0 498 099	ADIU-A61	4B0 498 103	ADIU-A61	4B0 498 103
A6 Avant (4B, C5)	2.8 quattro APR	AT/MT	2800	199712	200105	AD-011A45	4D0 498 099	ADIU-A61	4B0 498 103	ADIU-A61	4B0 498 103
A6 Avant (4B, C5)	2.8 quattro AQD	AT/MT	2800	199712	200105	AD-011A45	4D0 498 099	ADIU-A61	4B0 498 103	ADIU-A61	4B0 498 103
A6 Avant (4B, C5)	2.8 ACK	AT/MT	2800	199712	199901	AD-011A45	4D0 498 099				
A6 Avant (4B, C5)	2.8 AGE	AT/MT	2800	199712	200105	AD-011A45	4D0 498 099				
A6 Avant (4B, C5)	2.8 ALG	AT/MT	2800	199712	199901	AD-011A45	4D0 498 099				
A6 Avant (4B, C5)	2.8 AMX	AT/MT	2800	199712	200105	AD-011A45	4D0 498 099				
A6 Avant (4B, C5)	2.8 APR	AT/MT	2800	199712	200105	AD-011A45	4D0 498 099				
A6 Avant (4B, C5)	2.8 AQD	AT/MT	2800	199712	200105	AD-011A45	4D0 498 099				
4F2	BLB	6MT	2000	200407			4F0 498 099 A	ADIU-A61	4E0 498 103	ADIU-A61	4E0 498 103
4F2	BNA	6MT	2000	200407	200511		4F0 498 099 A	ADIU-A61	4E0 498 103	ADIU-A61	4E0 498 103
4F2	BPJ	6MT	2000	200506			4F0 498 099 A	ADIU-A61	4E0 498 103	ADIU-A61	4E0 498 103
4F2	BRE	6MT	2000	200509			4F0 498 099 A	ADIU-A61	4E0 498 103	ADIU-A61	4E0 498 103
4F2	BRF	6MT	2000	200509			4F0 498 099 A	ADIU-A61	4E0 498 103	ADIU-A61	4E0 498 103
4F2	BVG	6MT	2000	200509	200606		4F0 498 099 A	ADIU-A61	4E0 498 103	ADIU-A61	4E0 498 103
4F2	BPJ	CVT	2000	200506			4F0 498 099 A	ADIU-A61	4E0 498 103	ADIU-A61	4E0 498 103
4F2	BYK	CVT	2000	200701			4F0 498 099 A	ADIU-A61	4E0 498 103	ADIU-A61	4E0 498 103
4F2	BLB	CVT	2000	200407	200511		4F0 498 099 A		8E0 498 103 C		8E0 498 103 C
4F2	BNA	CVT	2000	200407	200511		4F0 498 099 A		8E0 498 103 C		8E0 498 103 C
4F2	BRE	CVT	2000	200509			4F0 498 099 A		8E0 498 103 C		8E0 498 103 C
4F2	BRF	CVT	2000	200509			4F0 498 099 A		8E0 498 103 C		8E0 498 103 C
4F2	BDW	6MT	2400	200404			4F0 498 099 A	ADIU-A61	4E0 498 103	ADIU-A61	4E0 498 103
4F2	BDW	CVT	2400	200404			4F0 498 099 A	ADIU-A61	4E0 498 103	ADIU-A61	4E0 498 103
4F2 Quattro	BDW	6MT	2400	200404			4F0 498 099 A	ADIU-A61	4E0 498 103	ADIU-A61	4E0 498 103
4F2 Quattro	BPP	6AT	2700	200411		AD-A64F1	4E0 498 099 A	ADIU-A61	4E0 498 103	ADIU-A61	4E0 498 103
4F2 Quattro	BSG	6AT	2700	200501		AD-A64F1	4E0 498 099 A	ADIU-A61	4E0 498 103	ADIU-A61	4E0 498 103
4F2	BPP	CVT	2700	200601			4F0 498 099 B	ADIU-A61	4E0 498 103	ADIU-A61	4E0 498 103
4F2	BSG	CVT	2700	200501			4F0 498 099 B	ADIU-A61	4E0 498 103	ADIU-A61	4E0 498 103
4F2	BPP	6MT	2700	200601			4F0 498 099 B	ADIU-A61	4E0 498 103	ADIU-A61	4E0 498 103
4F2	BSG	6MT	2700	200601			4F0 498 099 B	ADIU-A61	4E0 498 103	ADIU-A61	4E0 498 103
4F2 Quattro	BDX	6AT	2800	200611		AD-A64F1	4E0 498 099 A	ADIU-A61	4E0 498 103	ADIU-A61	4E0 498 103
4F2	BDX	6MT	2800	200611			4F0 498 099 A	ADIU-A61	4E0 498 103	ADIU-A61	4E0 498 103
4F2	BDX	CVT	2800	200611			4F0 498 099 A	ADIU-A61	4E0 498 103	ADIU-A61	4E0 498 103
4F2 Quattro	BMK	6AT	3000	200404	200605	AD-A64F1	4E0 498 099 A	ADIU-A61	4E0 498 103	ADIU-A61	4E0 498 103
4F2 Quattro	BNG	6AT	3000	200404		AD-A64F1	4E0 498 099 A	ADIU-A61	4E0 498 103	ADIU-A61	4E0 498 103
4F2 Quattro	BBJ	6AT	3000	200404	200506	AD-A64F1	4E0 498 099 A	ADIU-A61	4E0 498 103	ADIU-A61	4E0 498 103
4F2 Quattro	ASB	6AT	3000	200711		AD-A64F1	4E0 498 099 A	ADIU-A61	4E0 498 103	ADIU-A61	4E0 498 103
4F2	BBJ	CVT	3000	200404	200506		4F0 498 099 A	ADIU-A61	4E0 498 103	ADIU-A61	4E0 498 103
4F2 Quattro	BMK	6MT	3000	200404	200605		4F0 498 099 A	ADIU-A61	4E0 498 103	ADIU-A61	4E0 498 103
4F2 Quattro	BNG	6MT	3000	200404			4F0 498 099 A	ADIU-A61	4E0 498 103	ADIU-A61	4E0 498 103
4F2 Quattro	ASB	6MT	3000	200711			4F0 498 099 A	ADIU-A61	4E0 498 103	ADIU-A61	4E0 498 103
4F2 Quattro	AUK	6AT	3200	200404		AD-A64F1	4E0 498 099 A	ADIU-A61	4E0 498 103	ADIU-A61	4E0 498 103
4F2 Quattro	BKH	6AT	3200	200606		AD-A64F1	4E0 498 099 A	ADIU-A61	4E0 498 103	ADIU-A61	4E0 498 103
4F2 Quattro	BYU	6AT	3200	200609		AD-A64F1	4E0 498 099 A	ADIU-A61	4E0 498 103	ADIU-A61	4E0 498 103
4F2	AUK	6MT	3200	200404			4F0 498 099 A	ADIU-A61	4E0 498 103	ADIU-A61	4E0 498 103
4F2	AUK	CVT	3200	200404			4F0 498 099 A	ADIU-A61	4E0 498 103	ADIU-A61	4E0 498 103
4F2	BKH	CVT	3200	200606			4F0 498 099 A	ADIU-A61	4E0 498 103	ADIU-A61	4E0 498 103
4F2 Quattro	AUK	6MT	3200	200404			4F0 498 099 A	ADIU-A61	4E0 498 103	ADIU-A61	4E0 498 103
4F2 Quattro	BAR	6AT	4200	200404		AD-A64F1	4E0 498 099 A	ADIU-A61	4E0 498 103	ADIU-A61	4E0 498 103
4F2 Quattro	BVJ	6AT	4200	200605		AD-A64F1	4E0 498 099 A	ADIU-A61	4E0 498 103	ADIU-A61	4E0 498 103
S6 4F2 Quattro	BXA	6AT	5200	200606		AD-A64F1	4E0 498 099 A		4F0 498 103		4F0 498 103
4F5 Avant	BLB	6MT	2000	200407			4F0 498 099 A	ADIU-A61	4E0 498 103	ADIU-A61	4E0 498 103
4F5 Avant	BNA	6MT	2000	200407	200511		4F0 498 099 A	ADIU-A61	4E0 498 103	ADIU-A61	4E0 498 103
4F5 Avant	BPJ	6MT	2000	200506			4F0 498 099 A	ADIU-A61	4E0 498 103	ADIU-A61	4E0 498 103
4F5 Avant	BRE	6MT	2000	200509			4F0 498 099 A	ADIU-A61	4E0 498 103	ADIU-A61	4E0 498 103
4F5 Avant	BRF	6MT	2000	200509			4F0 498 099 A	ADIU-A61	4E0 498 103	ADIU-A61	4E0 498 103
4F5 Avant	BVG	6MT	2000	200509	200606		4F0 498 099 A	ADIU-A61	4E0 498 103	ADIU-A61	4E0 498 103
4F5 Avant	BPJ	CVT	2000	200506			4F0 498 099 A	ADIU-A61	4E0 498 103	ADIU-A61	4E0 498 103
4F5 Avant	BYK	CVT	2000	200701			4F0 498 099 A	ADIU-A61	4E0 498 103	ADIU-A61	4E0 498 103
4F5 Avant	BLB	CVT	2000	200407	200511		4F0 498 099 A		8E0 498 103 C		8E0 498 103 C
4F5 Avant	BNA	CVT	2000	200407	200511		4F0 498 099 A		8E0 498 103 C		8E0 498 103 C
4F5 Avant	BRE	CVT	2000	200509			4F0 498 099 A		8E0 498 103 C		8E0 498 103 C
4F5 Avant	BRF	CVT	2000	200509			4F0 498 099 A		8E0 498 103 C		8E0 498 103 C
4F5 Avant	BDW	6MT	2400	200404			4F0 498 099 A	ADIU-A61	4E0 498 103	ADIU-A61	4E0 498 103
4F5 Avant	BDW	CVT	2400	200404			4F0 498 099 A	ADIU-A61	4E0 498 103	ADIU-A61	4E0 498 103
4F5 Avant Quattro	BDW	6MT	2400	200404			4F0 498 099 A	ADIU-A61	4E0 498 103	ADIU-A61	4E0 498 103
4F5 Avant Quattro	BPP	6AT	2700	200411		AD-A64F1	4E0 498 099 A	ADIU-A61	4E0 498 103	ADIU-A61	4E0 498 103
4F5 Avant Quattro	BSG	6AT	2700	200501		AD-A64F1	4E0 498 099 A	ADIU-A61	4E0 498 103	ADIU-A61	4E0 498 103
4F5 Avant	BPP	CVT	2700	200601			4F0 498 099 B	ADIU-A61	4E0 498 103	ADIU-A61	4E0 498 103
4F5 Avant	BSG	CVT	2700	200501			4F0 498 099 B	ADIU-A61	4E0 498 103	ADIU-A61	4E0 498 103
4F5 Avant	BPP	6MT	2700	200601			4F0 498 099 B	ADIU-A61	4E0 498 103	ADIU-A61	4E0 498 103
4F5 Avant	BSG	6MT	2700	200601			4F0 498 099 B	ADIU-A61	4E0 498 103	ADIU-A61	4E0 498 103
4F5 Avant Quattro	BDX	6AT	2800	200611		AD-A64F1	4E0 498 099 A	ADIU-A61	4E0 498 103	ADIU-A61	4E0 498 103
4F5 Avant	BDX	6MT	2800	200611			4F0 498 099 A	ADIU-A61	4E0 498 103	ADIU-A61	4E0 498 103
4F5 Avant	BDX	CVT	2800	200611			4F0 498 099 A	ADIU-A61	4E0 498 103	ADIU-A61	4E0 498 103

AUDI

MODEL	ENGINE	AT/MT	CC	YEAR	YEAR	OUTER	O.E No.R	INNER R	O.E No.IR	INNER L	O.E No.IL
4F5 Avant Quattro	BMK	6AT	3000	200404	200605	AD-A64F1	4E0 498 099 A	ADIU-A61	4E0 498 103	ADIU-A61	4E0 498 103
4F5 Avant Quattro	BNG	6AT	3000	200404		AD-A64F1	4E0 498 099 A	ADIU-A61	4E0 498 103	ADIU-A61	4E0 498 103
4F5 Avant Quattro	BBJ	6AT	3000	200404	200506	AD-A64F1	4E0 498 099 A	ADIU-A61	4E0 498 103	ADIU-A61	4E0 498 103
4F5 Avant Quattro	ASB	6AT	3000	200711		AD-A64F1	4E0 498 099 A	ADIU-A61	4E0 498 103	ADIU-A61	4E0 498 103
4F5 Avant	BBJ	CVT	3000	200404	200506		4F0 498 099 A	ADIU-A61	4E0 498 103	ADIU-A61	4E0 498 103
4F5 Avant Quattro	BMK	6MT	3000	200404	200605		4F0 498 099 A	ADIU-A61	4E0 498 103	ADIU-A61	4E0 498 103
4F5 Avant Quattro	BNG	6MT	3000	200404			4F0 498 099 A	ADIU-A61	4E0 498 103	ADIU-A61	4E0 498 103
4F5 Avant Quattro	ASB	6MT	3000	200711			4F0 498 099 A	ADIU-A61	4E0 498 103	ADIU-A61	4E0 498 103
4F5 Avant Quattro	AUK	6AT	3200	200404		AD-A64F1	4E0 498 099 A	ADIU-A61	4E0 498 103	ADIU-A61	4E0 498 103
4F5 Avant Quattro	BKH	6AT	3200	200606		AD-A64F1	4E0 498 099 A	ADIU-A61	4E0 498 103	ADIU-A61	4E0 498 103
4F5 Avant Quattro	BYU	6AT	3200	200609		AD-A64F1	4E0 498 099 A	ADIU-A61	4E0 498 103	ADIU-A61	4E0 498 103
4F5 Avant	AUK	6MT	3200	200404			4F0 498 099 A	ADIU-A61	4E0 498 103	ADIU-A61	4E0 498 103
4F5 Avant	AUK	CVT	3200	200404			4F0 498 099 A	ADIU-A61	4E0 498 103	ADIU-A61	4E0 498 103
4F5 Avant	BKH	CVT	3200	200606			4F0 498 099 A	ADIU-A61	4E0 498 103	ADIU-A61	4E0 498 103
4F5 Avant Quattro	AUK	6MT	3200	200404			4F0 498 099 A	ADIU-A61	4E0 498 103	ADIU-A61	4E0 498 103
4F5 Avant Quattro	BAR	6AT	4200	200404		AD-A64F1	4E0 498 099 A	ADIU-A61	4E0 498 103	ADIU-A61	4E0 498 103
4F5 Avant Quattro	BVJ	6AT	4200	200605		AD-A64F1	4E0 498 099 A	ADIU-A61	4E0 498 103	ADIU-A61	4E0 498 103
S6 4F5 Avant Quattro	BXA	6AT	5200	200606		AD-A64F1	4E0 498 099 A		4F0 498 103		4F0 498 103
A6 ALLROAD QUATTRO											
4FH	ASB	6AT	3000	200711		AD-A64F1	4F0 498 099 A	ADIU-A61	4E0 498 103	ADIU-A61	4E0 498 103
4FH	BNG	6AT	3000	200404		AD-A64F1	4F0 498 099 A	ADIU-A61	4E0 498 103	ADIU-A61	4E0 498 103
4FH	BPP	6AT	2700	200601		AD-A64F1	4F0 498 099 A	ADIU-A61	4E0 498 103	ADIU-A61	4E0 498 103
4FH	BSG	6AT	2700	200601		AD-A64F1	4F0 498 099 A	ADIU-A61	4E0 498 103	ADIU-A61	4E0 498 103
4FH	AUK	6AT	3200	200404		AD-A64F1	4F0 498 099 A	ADIU-A61	4E0 498 103	ADIU-A61	4E0 498 103
4FH	BVJ	6AT	4200	200605		AD-A64F1	4F0 498 099 A	ADIU-A61	4E0 498 103	ADIU-A61	4E0 498 103
4FH	BNG	6MT	3000	200404		AD-A64F1	4F0 498 099 A	ADIU-A61	4E0 498 103	ADIU-A61	4E0 498 103
4FH	ASB	6MT	3000	200711		AD-A64F1	4F0 498 099 A	ADIU-A61	4E0 498 103	ADIU-A61	4E0 498 103
4FH	AUK	6MT	3200	200404		AD-A64F1	4F0 498 099 A	ADIU-A61	4E0 498 103	ADIU-A61	4E0 498 103
4BH	AKE	MT/AT	2500	199911	200308	AD-011A45	4D0 498 099	ADIU-A61	4B0 498 103	ADIU-A61	4B0 498 103
4BH	BCZ	MT/AT	2500	200302	200508	AD-011A45	4D0 498 099	ADIU-A61	4B0 498 103	ADIU-A61	4B0 498 103
4BH	BAU	MT/AT	2500	200302	200508	AD-011A45	4D0 498 099	ADIU-A61	4B0 498 103	ADIU-A61	4B0 498 103
4BH	ARE	MT/AT	2700	200005	200206	AD-011A45	4D0 498 099	ADIU-A61	4B0 498 103	ADIU-A61	4B0 498 103
4BH	BES	MT/AT	2700	200207	200508	AD-011A45	4D0 498 099	ADIU-A61	4B0 498 103	ADIU-A61	4B0 498 103
4BH	BAS	MT/AT	4200	200304	200508	AD-011A45	4D0 498 099	ADIU-A61	4Z7 498 103	ADIU-A61	4Z7 498 103
A8											
A8 (4D2, 4D8)	2.8 quattro AAH	AT/MT	2800	199403		AD-011A45	4D0 498 099				
A8 (4D2, 4D8)	2.8 AAH	AT/MT	2800	199403		AD-011A45	4D0 498 099				
A8 (4D2, 4D8)	4.2 quattro ABZ	AT/MT	4200	199403		AD-011A45	4D0 498 099				
4E2	BDX	CVT	2800	200709		AD-A64F1	4E0 498 099 A	ADIU-A61	4E0 498 103	ADIU-A61	4E0 498 103
4E2	ASN	CVT	3000	200307	200505	AD-A64F1	4E0 498 099 A	ADIU-A61	4E0 498 103	ADIU-A61	4E0 498 103
4E2	ASB	6AT	3000	200605		AD-A64F1	4E0 498 099 A	ADIU-A61	4E0 498 103	ADIU-A61	4E0 498 103
4E2	BNG	6AT	3000	200709		AD-A64F1	4E0 498 099 A	ADIU-A61	4E0 498 103	ADIU-A61	4E0 498 103
4E2	BBJ	CVT	3000	200307	200605	AD-A64F1	4E0 498 099 A	ADIU-A61	4E0 498 103	ADIU-A61	4E0 498 103
4E2	BPK	6AT	3200	200506			4F0 498 099 A	ADIU-A61	4E0 498 103	ADIU-A61	4E0 498 103
4E2	BPK	CVT	3200	200506		AD-A64F1	4E0 498 099 A	ADIU-A61	4E0 498 103	ADIU-A61	4E0 498 103
4E2	BFL	6AT	3700	200211	200605	AD-A64F1	4E0 498 099 A	ADIU-A61	4E0 498 103	ADIU-A61	4E0 498 103
4E2	ASE	6AT	4000	200305	200507	AD-A64F1	4E0 498 099 A	ADIU-A61	4E0 498 103	ADIU-A61	4E0 498 103
4E2	BVN	6AT	4200	200709		AD-A64F1	4E0 498 099 A	ADIU-A61	4E0 498 103	ADIU-A61	4E0 498 103
4E2	BVJ	6AT	4200	200606		AD-A64F1	4E0 498 099 A	ADIU-A61	4E0 498 103	ADIU-A61	4E0 498 103
4E2	BFM	6AT	4200	200211	200605	AD-A64F1	4E0 498 099 A	ADIU-A61	4E0 498 103	ADIU-A61	4E0 498 103
S8 4E2	BSM	6AT	5200	200606		AD-A64F1	4E0 498 099 A	ADIU-A61	4E0 498 103	ADIU-A61	4E0 498 103
4E2	BHT	6AT	6000	200402		AD-A64F1	4E0 498 099 A	ADIU-A61	4E0 498 103	ADIU-A61	4E0 498 103
4E2	BTE	6AT	6000	200709		AD-A64F1	4E0 498 099 A	ADIU-A61	4E0 498 103	ADIU-A61	4E0 498 103
4E2	BSB	6AT	6000	200709		AD-A64F1	4E0 498 099 A	ADIU-A61	4E0 498 103	ADIU-A61	4E0 498 103
Q7											
3.0 TDI	BUN	AT/MT	3000	200603		VW-TG	7L0 498 099 C	VWIU-TG	7L0 498 103 A	VWIU-TG	7L0 498 103 A
3.0 TDI	BUG	AT/MT	3000	200603		VW-TG	7L0 498 099 C	VWIU-TG	7L0 498 103 A	VWIU-TG	7L0 498 103 A
3.0 TDI	CASB	AT/MT	3000	200603		VW-TG	7L0 498 099 C	VWIU-TG	7L0 498 103 A	VWIU-TG	7L0 498 103 A
3.0 TDI	CASA	AT/MT	3000	200711		VW-TG	7L0 498 099 C	VWIU-TG	7L0 498 103 A	VWIU-TG	7L0 498 103 A
3.6 FSI	BHK	AT/MT	3600	200608		VW-TG	7L0 498 099 C	VWIU-TG	7L0 498 103 A	VWIU-TG	7L0 498 103 A
4.2 FSI	BAR	AT/MT	4200	200603		VW-TG	7L0 498 099 C	VWIU-TG	7L0 498 103 A	VWIU-TG	7L0 498 103 A
TT											
8N3	AJQ	5MT	1800	199810	200008	VW-029	357 498 099 E	VWIU-G41	1J0 498 103 K	VWIU-G41	1J0 498 103 K
8N3	APP	5MT	1800	199911	200009	VW-029	357 498 099 E	VWIU-G41	1J0 498 103 K	VWIU-G41	1J0 498 103 K
8N3	AUM	5MT	1800	200101	200208	VW-029	357 498 099 E	VWIU-G41	1J0 498 103 K	VWIU-G41	1J0 498 103 K
8J3	BWA	AT/MT	2000	200608		VW-B62	1K0 498 099 B	VWIU-B6M1	1K0 498 103 A	VWIU-B6M1	1K0 498 103 A
8J3	BUB	AT/MT	3200	200608		VW-B62	8J0 498 099	VWIU-B6M1	1K0 498 103 A	VWIU-B6M1	1K0 498 103 A
8J3	BUB	6T DSG	3200	200608		VW-B62	8J0 498 099		1K0 498 103 D		1K0 498 103 D
8J9 Roadster	BWA	AT/MT	3200	200608		VW-B62	1K0 498 099 B	VWIU-B6M1	1K0 498 103 A	VWIU-B6M1	1K0 498 103 A
8J9 Roadster	BUB	AT/MT	3200	200608		VW-B62	8J0 498 099	VWIU-B6M1	1K0 498 103 A	VWIU-B6M1	1K0 498 103 A
8J9 Roadster	BUB	6T DSG	3200	200608		VW-B62	8J0 498 099		1K0 498 103 D		1K0 498 103 D

BMW

MODEL	ENGINE	AT/MT	CC	YEAR	YEAR	OUTER	O.E No.R	INNER R	O.E No.IR	INNER L	O.E No.IL
3-SERIES (E30)											
3 (E30)	M3 2.3 S 14 B 23	AT/MT	2300	198209	199201			BIUR-341	33 21 1 226 333	BIUR-341	33 21 1 226 333
3 (E30)	M3 2.3 S 14 B 23 (Kat)	AT/MT	2300	198209	199201			BIUR-341	33 21 1 226 333	BIUR-341	33 21 1 226 333
3 (E30)	M3 2.3 S 14 B 23 (Kat)	AT/MT	2300	198209	199201			BIUR-341	33 21 1 226 333	BIUR-341	33 21 1 226 333
3 (E30)	324 td M 21 D 24	AT/MT	2400	198209	199201			BIUR-341	33 21 1 226 333	BIUR-341	33 21 1 226 333
3 (E30)	324 td M 21 D 24 (Kat.)	AT/MT	2400	198209	199201			BIUR-341	33 21 1 226 333	BIUR-341	33 21 1 226 333
3 (E30)	325 i M 20 B 25	AT/MT	2500	198209	199201			BIUR-341	33 21 1 226 333	BIUR-341	33 21 1 226 333
3 (E30)	325 i M 20 B 25 (Kat.)	AT/MT	2500	198209	199201			BIUR-341	33 21 1 226 333	BIUR-341	33 21 1 226 333
3 cabrio (E30)	325 i M 20 B 25	AT/MT	2500	198512	199310			BIUR-341	33 21 1 226 333	BIUR-341	33 21 1 226 333
3 cabrio (E30)	325 i M 20 B 25 (Kat.)	AT/MT	2500	198512	199310			BIUR-341	33 21 1 226 333	BIUR-341	33 21 1 226 333
3 touring (E30)	316 i	AT/MT	1600	198707	199406			BIUR-341	33 21 1 226 333	BIUR-341	33 21 1 226 333
3 touring (E30)	316 i M 40 B 16 (Kat.)	AT/MT	1600	198707	199406			BIUR-341	33 21 1 226 333	BIUR-341	33 21 1 226 333
3 touring (E30)	318 i M 40 B 18	AT/MT	1800	198707	199406			BIUR-341	33 21 1 226 333	BIUR-341	33 21 1 226 333
3 touring (E30)	318 i M 40 B 18 (Kat.)	AT/MT	1800	198707	199406			BIUR-341	33 21 1 226 333	BIUR-341	33 21 1 226 333
3 touring (E30)	320 i M 20 B 20 (Motronic,Kat.)	AT/MT	2000	198707	199406			BIUR-341	33 21 1 226 333	BIUR-341	33 21 1 226 333
3 touring (E30)	324 td M 21 D 24	AT/MT	2400	198707	199406			BIUR-341	33 21 1 226 333	BIUR-341	33 21 1 226 333
3 touring (E30)	324 td M 21 D 24 (Kat.)	AT/MT	2400	198707	199406			BIUR-341	33 21 1 226 333	BIUR-341	33 21 1 226 333
3 touring (E30)	325 i M 20 B 25 (Kat.)	AT/MT	2500	198707	199406			BIUR-341	33 21 1 226 333	BIUR-341	33 21 1 226 333
3-SERIES (E36)											
3 (E36)	316 i M 40 B 16	AT/MT	1600	199009	199802			BIUR-361	33 21 1 227 606	BIUR-361	33 21 1 227 606
3 (E36)	316 i M 40 B 16 (Kat.)	AT/MT	1600	199009	199802			BIUR-361	33 21 1 227 606	BIUR-361	33 21 1 227 606
3 (E36)	316 i M 43 B 16	AT/MT	1600	199009	199802			BIUR-361	33 21 1 227 606	BIUR-361	33 21 1 227 606
3 (E36)	318 i M 40 B 18 (Kat.)	AT/MT	1800	199009	199802			BIUR-361	33 21 1 227 606	BIUR-361	33 21 1 227 606
3 (E36)	318 i M 43 B 18	AT/MT	1800	199009	199802			BIUR-361	33 21 1 227 606	BIUR-361	33 21 1 227 606
3 (E36)	318 is M 42 B 18	AT/MT	1800	199009	199802			BIUR-361	33 21 1 227 606	BIUR-361	33 21 1 227 606
3 (E36)	320 i M 50 B (20 6 S1)	AT/MT	2000	199009	199802			BIUR-361	33 21 1 227 606	BIUR-361	33 21 1 227 606
3 (E36)	320 i M 50 B (20 6 S2) Vanos	AT/MT	2000	199009	199802			BIUR-361	33 21 1 227 606	BIUR-361	33 21 1 227 606
3 (E36)	320 i M 52 B (20 6 S3) Vanos	AT/MT	2000	199009	199802			BIUR-361	33 21 1 227 606	BIUR-361	33 21 1 227 606
3 (E36)	325 i M 50 B 25	AT/MT	2500	199009	199802			BIUR-362	33 21 1 227 585	BIUR-362	33 21 1 227 585
3 (E36)	325 i M 52 B 25 (Vanos)	AT/MT	2500	199009	199802			BIUR-362	33 21 1 227 585	BIUR-362	33 21 1 227 585
3 (E36)	325 td M 51 D 25	AT/MT	2500	199009	199802			BIUR-362	33 21 1 227 585	BIUR-362	33 21 1 227 585
3 (E36)	325 tds M 51 D 25 (Inter.)	AT/MT	2500	199009	199802			BIUR-362	33 21 1 227 585	BIUR-362	33 21 1 227 585
3 cabrio (E36)	318 i M 43 B 18	AT/MT	1800	199203	199904			BIUR-361	33 21 1 227 606	BIUR-361	33 21 1 227 606
3 cabrio (E36)	320 i M 50 B (20 6 S2) Vanos	AT/MT	2000	199203	199904			BIUR-361	33 21 1 227 606	BIUR-361	33 21 1 227 606
3 cabrio (E36)	320 i M 52 B (20 6 S3) Vanos	AT/MT	2000	199203	199904			BIUR-361	33 21 1 227 606	BIUR-361	33 21 1 227 606
3 cabrio (E36)	325 i M 52 B 25 (Vanos)	AT/MT	2500	199203	199904			BIUR-362	33 21 1 227 585	BIUR-362	33 21 1 227 585
3 compact (E36)	316 i M 43 B 16	AT/MT	1600	199403	200008			BIUR-361	33 21 1 227 606	BIUR-361	33 21 1 227 606
3 compact (E36)	318 tds M 41 D 18 (Inter.)	AT/MT	1800	199403	200008			BIUR-361	33 21 1 227 606	BIUR-361	33 21 1 227 606
3 compact (E36)	318 ti M 42 B 18	AT/MT	1800	199403	200008			BIUR-361	33 21 1 227 606	BIUR-361	33 21 1 227 606
3 compact (E36)	318 ti M 44 B 19	AT/MT	1900	199403	200008			BIUR-361	33 21 1 227 606	BIUR-361	33 21 1 227 606
3 coupe (E36)	316 i M 43 B 16	AT/MT	1600	199203	199904			BIUR-361	33 21 1 227 606	BIUR-361	33 21 1 227 606
3 coupe (E36)	318 is M 42 B 18	AT/MT	1800	199203	199904			BIUR-361	33 21 1 227 606	BIUR-361	33 21 1 227 606
3 coupe (E36)	318 is M 44 B 19	AT/MT	1900	199203	199904			BIUR-361	33 21 1 227 606	BIUR-361	33 21 1 227 606
3 coupe (E36)	320 i M 50 B (20 6 S1)	AT/MT	2000	199203	199904			BIUR-361	33 21 1 227 606	BIUR-361	33 21 1 227 606
3 coupe (E36)	320 i M 50 B (20 6 S2) Vanos	AT/MT	2000	199203	199904			BIUR-361	33 21 1 227 606	BIUR-361	33 21 1 227 606
3 coupe (E36)	320 i M 52 B (20 6 S3) Vanos	AT/MT	2000	199203	199904			BIUR-361	33 21 1 227 606	BIUR-361	33 21 1 227 606
3 coupe (E36)	323 i 2.5 M 52 B 25 (Vanos)	AT/MT	2500	199203	199904			BIUR-362	33 21 1 227 585	BIUR-362	33 21 1 227 585
3 coupe (E36)	325 i M 52 B 25 (Vanos)	AT/MT	2500	199203	199904			BIUR-362	33 21 1 227 585	BIUR-362	33 21 1 227 585
3 coupe (E36)	328 i M 52 B 28	AT/MT	2800	199203	199904			BIUR-362	33 21 1 227 585	BIUR-362	33 21 1 227 585
3 touring (E36)	318 i M 43 B 18	AT/MT	1800	199501	199910			BIUR-361	33 21 1 227 606	BIUR-361	33 21 1 227 606
3 touring (E36)	318 tds M 41 D 18 (Inter.)	AT/MT	1800	199501	199910			BIUR-361	33 21 1 227 606	BIUR-361	33 21 1 227 606
3 touring (E36)	320 i M 52 B (20 6 S3) Vanos	AT/MT	2000	199501	199910			BIUR-361	33 21 1 227 606	BIUR-361	33 21 1 227 606
3 touring (E36)	320 i M 52 B (20 6 S3) Vanos	AT/MT	2000	199501	199910			BIUR-362	33 21 1 227 585	BIUR-362	33 21 1 227 585
3 touring (E36)	323 i 2.5 M 52 B 25 (Vanos)	AT/MT	2500	199501	199910			BIUR-362	33 21 1 227 585	BIUR-362	33 21 1 227 585
3 touring (E36)	325 tds M 51 D 25 (Inter.)	AT/MT	2500	199501	199910			BIUR-362	33 21 1 227 585	BIUR-362	33 21 1 227 585
3 touring (E36)	328 i M 52 B 28	AT/MT	2800	199501	199910			BIUR-362	33 21 1 227 585	BIUR-362	33 21 1 227 585
5-SERIES (E34)											
5 (E34)	518 i M 40 B 18 (Kat.)	AT/MT	1800	198801	199511			BIUR-341	33 21 1 226 720	BIUR-341	33 21 1 226 720
5 (E34)	518 i M 43 B 18	AT/MT	1800	198801	199511			BIUR-341	33 21 1 226 720	BIUR-341	33 21 1 226 720
5 (E34)	520 i 24V M 50 B (20 6 S1)	AT/MT	2000	198801	199511			BIUR-341	33 21 1 226 720	BIUR-341	33 21 1 226 720
5 (E34)	520 i 24V M 50 B (20 6 S2) Vanos	AT/MT	2000	198801	199511			BIUR-341	33 21 1 226 720	BIUR-341	33 21 1 226 720
5 (E34)	520 i M 20 B 20 (Motronic,Kat.)	AT/MT	2000	198801	199511			BIUR-341	33 21 1 226 720	BIUR-341	33 21 1 226 720
5 (E34)	524 td M 21 D 24	AT/MT	2400	198801	199511			BIUR-341	33 21 1 226 720	BIUR-341	33 21 1 226 720
5 (E34)	524 td M 21 D 24 (Kat.)	AT/MT	2400	198801	199511			BIUR-341	33 21 1 226 720	BIUR-341	33 21 1 226 720
5 (E34)	525 i 24V M 50 B 25	AT/MT	2500	198801	199511			BIUR-341	33 21 1 226 720	BIUR-341	33 21 1 226 720
5 (E34)	525 i 24V M 52 B 25 (Vanos)	AT/MT	2500	198801	199511			BIUR-341	33 21 1 226 720	BIUR-341	33 21 1 226 720
5 (E34)	525 i M 20 B 25 (Kat.)	AT/MT	2500	198801	199511			BIUR-341	33 21 1 226 720	BIUR-341	33 21 1 226 720
5 (E34)	525 i X 24V M 52 B 25 (Vanos)	AT/MT	2500	198801	199511			BIUR-341	33 21 1 226 720	BIUR-341	33 21 1 226 720
5 (E34)	525 td M 51 D 25	AT/MT	2500	198801	199511			BIUR-341	33 21 1 226 720	BIUR-341	33 21 1 226 720
5 (E34)	525 tds M 51 D 25 (Inter.)	AT/MT	2500	198801	199511			BIUR-341	33 21 1 226 720	BIUR-341	33 21 1 226 720
5 (E34)	530 i M 30 B 30 (Kat.)	AT/MT	3000	198801	199511			BIUR-342	33 21 1 226 622	BIUR-342	33 21 1 226 622
5 (E34)	530 i V8 M 60 B 30	AT/MT	3000	198801	199511			BIUR-341	33 21 1 226 720	BIUR-341	33 21 1 226 720
5 (E34)	530 i V8 M 60 B 30	AT/MT	3000	198801	199511			BIUR-342	33 21 1 226 622	BIUR-342	33 21 1 226 622
5 (E34)	535 i M 30 B 35 (Motronic,Kat.)	AT/MT	3500	198801	199511			BIUR-342	33 21 1 226 622	BIUR-342	33 21 1 226 622
5 (E34)	M5 3.6 KAT S 38 B 36 (Kat)	AT/MT	3600	198801	199511			BIUR-342	33 21 1 226 622	BIUR-342	33 21 1 226 622
5 (E34)	M5 3.6 S 38 B 36	AT/MT	3600	198801	199511			BIUR-342	33 21 1 226 622	BIUR-342	33 21 1 226 622
5 (E34)	M5 3.8 S 38 B 38	AT/MT	3800	198801	199511			BIUR-342	33 21 1 226 622	BIUR-342	33 21 1 226 622
5 (E34)	540 i V8 M 60 B 40	AT/MT	4000	198801	199511			BIUR-342	33 21 1 226 622	BIUR-342	33 21 1 226 622
5 touring (E34)	518 g M 43 B 18	AT/MT	1800	199111	199701			BIUR-341	33 21 1 226 720	BIUR-341	33 21 1 226 720
5 touring (E34)	518 i M 40 B 18 (Kat.)	AT/MT	1800	199111	199701			BIUR-341	33 21 1 226 720	BIUR-341	33 21 1 226 720
5 touring (E34)	518 i M 43 B 18	AT/MT	1800	199111	199701			BIUR-341	33 21 1 226 720	BIUR-341	33 21 1 226 720
5 touring (E34)	520 i M 50 B (20 6 S1)	AT/MT	2000	199111	199701			BIUR-341	33 21 1 226 720	BIUR-341	33 21 1 226 720
5 touring (E34)	520 i M 50 B (20 6 S2) Vanos	AT/MT	2000	199111	199701			BIUR-341	33 21 1 226 720	BIUR-341	33 21 1 226 720
5 touring (E34)	525 i M 50 B 25	AT/MT	2500	199111	199701			BIUR-341	33 21 1 226 720	BIUR-341	33 21 1 226 720
5 touring (E34)	525 i M 52 B 25 (Vanos)	AT/MT	2500	199111	199701			BIUR-341	33 21 1 226 720	BIUR-341	33 21 1 226 720
5 touring (E34)	525 i X M 50 B 25	AT/MT	2500	199111	199701			BIUR-341	33 21 1 226 720	BIUR-341	33 21 1 226 720
5 touring (E34)	525 i X M 52 B 25 (Vanos)	AT/MT	2500	199111	199701			BIUR-341	33 21 1 226 720	BIUR-341	33 21 1 226 720
5 touring (E34)	525 td M 51 D 25	AT/MT	2500	199111	199701			BIUR-341	33 21 1 226 720	BIUR-341	33 21 1 226 720
5 touring (E34)	525 tds M 51 D 25 (Inter.)	AT/MT	2500	199111	199701			BIUR-341	33 21 1 226 720	BIUR-341	33 21 1 226 720
5 touring (E34)	530 i V8 M 60 B 30	AT/MT	3000	199111	199701			BIUR-341	33 21 1 226 720	BIUR-341	33 21 1 226 720
5 touring (E34)	530 i V8 M 60 B 30	AT/MT	3000	199111	199701			BIUR-342	33 21 1 226 622	BIUR-342	33 21 1 226 622
5 touring (E34)	M5 3.8 S 38 B 38	AT/MT	3800	199111	199701			BIUR-342	33 21 1 226 622	BIUR-342	33 21 1 226 622
5 touring (E34)	540 i M 60 B 40	AT/MT	4000	199111	199701			BIUR-342	33 21 1 226 622	BIUR-342	33 21 1 226 622
7-SERIES (E32)											
7 (E32)	730 i,iL M 30 B 30	AT/MT	3000	198609	199409			BIUR-342	33 21 1 225 859	BIUR-342	33 21 1 225 859
7 (E32)	730 i,iL M 30 B 30 (Kat.)	AT/MT	3000	198609	199409			BIUR-342	33 21 1 225 859	BIUR-342	33 21 1 225 859
7 (E32)	735 i,iL M 30 B 35 (Motronic)	AT/MT	3500	198609	199409			BIUR-342	33 21 1 225 859	BIUR-342	33 21 1 225 859
7 (E32)	735 i,iL M 30 B 35 (Motronic,Kat.)	AT/MT	3500	198609	199409			BIUR-342	33 21 1 225 859	BIUR-342	33 21 1 225 859
7 (E32)	740 i,iL V8 M 60 B 40	AT/MT	4000	198609	199409			BIUR-342	33 21 1 225 859	BIUR-342	33 21 1 225 859
7 (E32)	750 i,iL V12 M 70 B 50	AT/MT	5000	198609	199409			BIUR-342	33 21 1 225 859	BIUR-342	33 21 1 225 859
X5-SERIES (E53)											
X5 3.0d	M57	AT	3000	199906		BX5-001	31607503538	BX5IR-001	31607503538	BX5IL-001	31607503537
X5 3.0i	M54	AT	3000	199906		BX5-001	31607503538	BX5IR-001	31607503538	BX5IL-001	31607503537
X5 4.4i	M62	AT	4400	199906		BX5-001	31607505006	BX5IR-001	31607503538	BX5IL-001	31607503537
X5 4.6is	M62	AT	4600	199906		BX5-001	31607505006	BX5IR-001	31607503538	BX5IL-001	31607503537
X5-SERIES (E70)											
3.0d	M57TU2D30	AT	3000	200601	200812	BX-E70	31607545126		31607545126		31607545125
xDrive30d	M57TU2D30	AT	3000	200801		BX-E70	31607545126		31607545126		31607545125
3.0sd	M57TU2D30	AT	3000	200701	200812	BX-E70	31607545126		31607545126		31607545125
xDrive35d	M57TU2D30	AT	3000	200801		BX-E70	31607545126		31607545126		31607545125
3.0si	N52B30	AT	3000	200601	200812	BX-E70	31607545126		31607545126		31607545125
xDrive30i	N52B30	AT	3000	200801		BX-E70	31607545126		31607545126		31607545125
4.8i	N62B48	AT	4800	200701	200812	BX-E70	31607545126		31607545126		31607545125
xDrive48i	N62B48	AT	4800	200801		BX-E70	31607545126		31607545126		31607545125
Z3											
Z3	1.8 M 43 B 18	AT/MT	1800	199510				BIUR-361	33 21 1 227 606	BIUR-361	33 21 1 227 606
Z3	1.9 M 43 B 19	AT/MT	1900	199510				BIUR-361	33 21 1 227 606	BIUR-361	33 21 1 227 606
Z3	1.9 M 44 B 19	AT/MT	1900	199510				BIUR-361	33 21 1 227 606	BIUR-361	33 21 1 227 606
Z3	2.0 M 52 B (20 6 S3) Vanos	AT/MT	2000	199510				BIUR-361	33 21 1 227 606	BIUR-361	33 21 1 227 606

CHEVROLET

MODEL	ENGINE	AT/MT	CC	YEAR	YEAR	OUTER	O.E No.R	INNER R	O.E No.IR	INNER L	O.E No.IL
LUMINA											
	3.1L	AT	3100	199001	199112	GM-063A47	26000690				
	3.1L	AT	3100	199001	199212	GM-063A47	26000690				
	3.4L	AT	3400	199201	199212	GM-063A47	26000690				
	3.4L	MT	3400	199101	199212	GM-063A47	26000690				
CAPTIVA											
	Z20DM	AT	2000	200703		OP-ANT	937 434 17		937 434 14		937 434 13
	Z20DM	MT	2000	200703		OP-ANT	937 434 17		937 434 14		937 434 15
	Z20DMH	AT	2000	200605		OP-ANT	937 434 17		937 434 14		937 434 13
	Z20DMH	MT	2000	200605		OP-ANT	937 434 17		937 434 14		937 434 15
	Z24XE	AT	2400	200605		OP-ANT	937 434 17		937 434 14		937 434 13
	Z32SE	AT	3200	200605		OP-ANT	937 434 17		937 434 14		937 434 13

CHRYSLER

MODEL	ENGINE	AT/MT	CC	YEAR	YEAR	OUTER	O.E No.R	INNER R	O.E No.IR	INNER L	O.E No.IL
GRAND CHEROKEE											
	4.0L	AT/MT	4000	199101	199902	CH-016A54	4720380				
	4.0L	AT/MT	4000	199902	200401	CH-020A48	5012456AA				
VOYAGER											
2.0i	ECB	MT	2000	199501	200103	CH-VGRA47	04808883				
2.4i	EDZ	MT	2400	199501	200103	CH-VGRA47	04808883				
2.5TD	R425	MT	2500	199501	200103	CH-VGRA47	04808580				

CITROËN

MODEL	ENGINE	AT/MT	CC	YEAR	YEAR	OUTER	O.E No.R	ASVA No.L	O.E No.L
BX									
	1.9L GTI	MT	1900	198507	198704	PG-12	21082215011	PG-12	21082215011
	T D	MT	1900	198803	199312	PG-12	21082215011	PG-12	21082215011
C4									
	1.6 Hdi	AT/MT	1600	200404		PG-364	3272-1X	PG-364	3272-1X
	2.0 16v	AT/MT	2000	200404		PG-364	3272-1X	PG-364	3272-1X
JUMPER									
230		MT	1900	199403	200204	PG-53A54		PG-53A54	
230		MT	1900	199403	200204	PG-78	9567582280	PG-78	9567582280
230		MT	1900	199403	200204	PG-78A54		PG-78A54	
230		MT	2000	199403	200204	PG-53A54		PG-53A54	
230		MT	2000	199403	200204	PG-78	9567582280	PG-78	9567582280
230		MT	2000	199403	200204	PG-78A54		PG-78A54	
230		MT	2500	199403	200204	PG-53A54		PG-53A54	
230		MT	2500	199403	200204	PG-78	9567582280	PG-78	9567582280
230		MT	2500	199403	200204	PG-78A54		PG-78A54	
230		MT	2800	199403	200204	PG-53A54		PG-53A54	
230		MT	2800	199403	200204	PG-78	9567582280	PG-78	9567582280
230		MT	2800	199403	200204	PG-78A54		PG-78A54	
XANTIA									
	1.6L I	MT	1600	199507	199812	PG-12	21082215011	PG-12	21082215011
	1.8L I	MT	1800	199303	199812	PG-12	21082215011	PG-12	21082215011
	1.9L D,TD	MT	1900	199303	199812	PG-12	21082215011	PG-12	21082215011
ZX									
	1.9L T D	MT	1900	199207	199706	PG-12	21082215011	PG-12	21082215011
	1.9L	MT	1900	199103	199706	PG-12	21082215011	PG-12	21082215011
	2.0L	MT	2000	199103	199706	PG-69	327318	PG-69	327318

DAEWOO

MODEL	ENGINE	AT/MT	CC	YEAR	YEAR	OUTER	O.E No.R	INNER R	O.E No.IR	INNER L	O.E No.IL
AVEO/KALOS											
-	-	MT/AT	1200	200209		DW-152A47	96391555	DWIU-556	96391556	DWIU-556	96391556
		MT/AT	1200	200209		DW-152	96391554	DWIU-556	96391556	DWIU-556	96391556
-	-	MT/AT	1400	200209		DW-007A47	96391551	DWIU-LAC	96245311	DWIU-LAC	96245311
-	-	MT/AT	1400	200209		DW-007	96391550	DWIU-845	96489845	DWIU-845	96489845
CIELO RACER											
ETI	GTI	MT/AT	1500	199201		DW-006	96251136				
ETI	GTI	MT/AT	1500	199201		DW-006	510734				
GS	VAN	MT/AT	1500	199201		DW-006	96251136				
GS	VAN	MT/AT	1500	199201		DW-006	510734				
GL	GLE	MT/AT	1600	199201		DW-006	510734				
GL	GLE	MT/AT	1600	199201		DW-006	96251136				
ESPERO											
		MT/AT	1800	200001		DW-006A47	96160589				
-	-	MT/AT	2000	200001		GM-109	96257802	GMIU-1001	96245286	GMIU-1001	96245286
-	-	MT/AT	2000	199501		GM-109	96257802	GMIU-1001	96245286	GMIU-1001	96245286
		MT/AT	2000	199501		DW-006A47	96160589				
KALOS											
-		MT/AT	1200	200209		DW-152A47	96391555				
-		MT/AT	1400	200209		DW-007A47	96391551				
LACETTI											
-	F14 DOHC	MT/AT	1400	200402		DW-011	96273759	DWIU-LAC	96245311	DWIU-LAC	96245311
-	F14 DOHC	MT/AT	1400	200402		DW-011A47	96273760	DWIU-LAC	96245311	DWIU-LAC	96245311
	F14 DOHC	MT/AT	1400	200402		DW-840	96489840				
-	F16 DOHC	MT/AT	1600	200402		DW-011	96273759	DWIU-LAC	96245311	DWIU-LAC	96245311
-	F16 DOHC	MT/AT	1600	200402		DW-011A47	96273760	DWIU-LAC	96245311	DWIU-LAC	96245311
	F16 DOHC	MT/AT	1600	200402		DW-840	96489840				
-	F18 DOHC	MT/AT	1800	200402		DW-011	96273759	DWIU-LAC	96245311	DWIU-LAC	96245311
-	F18 DOHC	MT/AT	1800	200402		DW-011A47	96273760	DWIU-LAC	96245311	DWIU-LAC	96245311
	F18 DOHC	MT/AT	1800	200402		DW-840	96489840				
LANOS											
-	H/B	MT	1500	199701		DW-006	96243576				
-	H/B	MT	1500	199701		DW-006	96251136				
-	H/B	MT	1500	199701		DW-006	96257804				
-	H/B	MT	1500	199701		GM-109	96241974				
-	H/B	MT	1500	199701		GM-109	96243573				
-	H/B	MT	1500	199701		DW-006	96243576				
-	H/B	MT	1500	199701		GM-109	96257802				
-	-	MT/AT	1500	199501		DW-600A47	96257803				
A14SMS	-	MT/AT	1400	199705		DW-600A47	96298465				
A14SMS	-	MT/AT	1400	199705		DW-600A47	96257803				
A15SMS	-	MT/AT	1500	199705		DW-600A47	96298465				
A15SMS	-	MT/AT	1500	199705		DW-600A47	96257803				
A16DMS	-	MT/AT	1600	199705		DW-006A47	96298467				
A16DMS	-	MT/AT	1600	199705		DW-006A47	96257801				
LEGANZA											
		MT	2000	199706	200212	DW-006A47	96160589	GMIU-1001	96245286	GMIU-1001	96245286
-	X20SED	MT	2000	199706	200212	GM-072	96257801				
-	X20SED	MT	2000	199706	200212	GM-072A43	96243575				
MATIZ											
-	3KYL	MT	800	199501	199901	DW-003	P96273570	OPIU-5005	512229	OPIU-5005	512229
-	3KYL	MT/AT	800	199801		DW-003	P96273570	OPIU-5005	512229	OPIU-5005	512229
-	-	MT/AT	800	200001		DW-72A40	96273571	OPIU-5005	512229	OPIU-5005	512229
-	-	MT/AT	800	199501		DW-72A40	96273571	OPIU-5005	512229	OPIU-5005	512229
NEXIA											
-	GLE/GL	AT	1500	199601		DW-006	26010773	OPIU-5004	26010773	OPIU-5004	26010773
-	GLE/GL	AT	1500	199601		DW-006	26013813	OPIU-5004	26010773	OPIU-5004	26010773
-	GLE/GL	AT	1500	199601		DW-006	510734	OPIU-5004	26010773	OPIU-5004	26010773
-	GLE/GL	AT	1500	199601		DW-006	96160618A	OPIU-5004	26010773	OPIU-5004	26010773
-	-	MT/AT	1500	199501		DW-005	513317				
-	-	MT/AT	1500	199501		DW-005	513317				
-	-	MT/AT	1500	199501		DW-006	513315	OPIU-5004	26010773	OPIU-5004	26010773
KOREA	GLE/GL	MT/AT	1500	199601		OP-1007					
NUBIRA											
-	-	MT/AT	1600	200307		DW-011	96273759	DWIU-LAC	96245311	DWIU-LAC	96245311
-	-	MT/AT	1800	200307		DW-011	96273759	DWIU-LAC	96245311	DWIU-LAC	96245311
-	-	MT/AT	2000	200001		GM-109	96257802				
-	-	MT/AT	2000	199501		DW-005A47	511315				
REZZO											
-	-	MT/AT	1600	200009		DW-006A47	96486854	DWIU-845	964 898 45	DWIU-845	964 898 45
-	-	MT/AT	1600	200009		DW-006A47	96489842	DWIU-845	964 898 45	DWIU-845	964 898 45
-	-	MT/AT	1800	200009		DW-006A47	96257854	DWIU-845	964 898 45	DWIU-845	964 898 45
-	-	MT/AT	1800	200009		DW-006A47	96489842	DWIU-845	964 898 45	DWIU-845	964 898 45
-	-	MT/AT	2000	200109		DW-009A47	96451520				
-	-	MT/AT	2000	200109		DW-009A47	96489832				
TICO											
-	-	MT/AT	800	199501		DW-1115	510160				

DAIHATSU

MODEL	ENGINE	AT/MT	CC	YEAR	YEAR	OUTER	O.E No.R	ASVA No.L	O.E No.L
ALTIS									
SXV20	5S-FE	4AT	2200	200003	200109		43410-06161		43420-06161
SXV20	5S-FE	4AT	2200	200003	200109		43410-33022		43420-33022
SXV25 4WD	5S-FE	4AT	2200	200,003	200109		43410-33112		43420-33112
APPLAUSE									
A101S	HD	MT	1600	198901	200005	DH-05	43410-87113	DH-05	43420-87113
A101S	HD	AT	1600	198901	200005	DH-05	43410-87114	DH-05	43420-87114
A101S	HD	5MT	1600	198906	199404	DH-05	43410-87119	DH-05	43420-87119
A101S	HD	5MT	1600	198906	199404		43410-87122		43420-87122
A101S	HD	AT	1600	198906	199404		43410-87121		43420-87121
A111S 4WD	HD	MT	1600	198906	199404	DH-05	43410-87115	DH-05	43420-87115
A111S 4WD	HD	MT	1600	198906	199404	DH-05	43410-87117	DH-05	43420-87117
A101S	HD	AT	1600	198906	199404	DH-05	43410-87120	DH-05	43420-87120
A101S	HD	5MT	1600	199404	200005	DH-05	43410-87123	DH-05	43420-87123
A101S	HD	AT	1600	199404	200005	DH-05	43410-87126	DH-05	43420-87126
ATRAI									
1S83 4WD	EF	MT/AT	660	199004	199401	DH-13	43410-87510	DH-13	43420-87512
S110 4WD	EF	MT/AT	660	199401	199512	DH-23	43410-87514	DH-23	43420-87514
S130 4WD	EF-TS	4/5MT	660	199401	199812	DH-23	43410-87514	DH-23	43420-87514
S130 4WD	EF-TS	4/5MT	660	199401	199512	DH-23	43410-87512	DH-23	43420-87515
S130 4WD	EF-ES	MT	660	199401	199512	DH-23	43410-87514	DH-23	43420-87514
S130 4WD	EF-ES	MT	660	199401	199512	DH-23	43410-87512	DH-23	43420-87515
S110 4WD	EF	MT/AT	660	199512	199812	DH-13	43410-87516	DH-13	43420-87516
S130 4WD	EF	MT/AT	660	199512	199812	DH-13	43410-87517	DH-13	43420-87517
ATRAY7 EXTOL									
S231G 4WD	K3-VE	MT/AT	1300	200007			43410-97506		43420-97504
S231G 4WD	K3-VE	MT/AT	1300	200007			43410-97507		43420-97505
BOON									
M300S	1KR-FE	4AT/C	1000	200405		TY-75	43410-B1010	TY-75	43420-B1010
M301S	K3-VE	4AT/C	1300	200405		TY-76	43410-B1020	TY-76	43420-B1020
M301S	K3-VE	4AT/C	1300	200405		TY-76	43410-B1020	TY-76	43420-B1020
M310S 4WD	1KR-FE	4AT/C	1000	200405		TY-75	43410-B1030	TY-75	43420-B1010
CHARADE									
G10	CB	MT	1000	197701	198201	DH-01	43410-87701	DH-01	43420-87701
G11	CB	MT	1000	198301	198701	DH-02	43410-87703	DH-02	43420-87703
G11	CB	MT	1000	198301	198701	DH-02	43410-87706	DH-02	43420-87706
G30	CL	MT	1000	198301	198701	DH-02	43410-87703	DH-02	43420-87703
G30	CL	MT	1000	198301	198701	DH-02	43410-87706	DH-02	43420-87706
G11	CB	MT/AT	1000	198301	198601	DH-02	43410-87704	DH-02	43420-87704
G11	CB	MT/AT	1000	198301	198601	DH-02	43410-87705	DH-02	43420-87705
G11	CB	MT/AT	1000	198301	198601	DH-02	43410-87707	DH-02	43420-87707
G11	CB	MT/AT	1000	198301	198601	DH-02	43410-87708	DH-02	43420-87708
G11	CB	MT/AT	1000	198301	198601	DH-02	43410-87709	DH-02	43420-87709
G100S	CB	MT	1000	198701	198901	DH-03	43410-87710	DH-03	43420-87710
G100S	CB	AT	1000	198701	198901	DH-03	43410-87711	DH-03	43420-87711
G100S	CB	AT	1000	198701	198901	DH-03	43410-87727	DH-03	43420-87727
G100S	CB	AT	1000	198701	198901	DH-03	43410-87735	DH-03	43420-87735
G100S	CB	MT	1000	198701	198901	DH-03	43410-87726	DH-03	43420-87726
G100S	CB	MT	1000	198701	198901	DH-03	43410-87731	DH-03	43420-87731
G100S	CB TBO	MT	1000	198701	198801	DH-03	43410-87731	DH-03	43420-87731
G100S	CB TBO	MT	1000	198701	198901		43410-87737		43420-87737
G100S	CB TBO	AT	1000	198701	198801	DH-03	43410-87735	DH-03	43420-87735
G101S	CL	MT	1000	198701	198901	DH-03	43410-87731	DH-03	43420-87731
G101S	CL TBO	MT	1000	198701	198901	DH-03	43410-87731	DH-03	43420-87731
G101S	CL TBO	AT	1000	198701	198901	DH-03	43410-87735	DH-03	43420-87735
G100S	CB	MT	1000	198901	199001	DH-06	43410-87717	DH-06	43420-87717
G100S	CB	MT	1000	198901	198901	DH-03	43410-87712	DH-03	43420-87712
G100S	CB	MT	1000	198901	199301	DH-06	43410-87720	DH-07	43420-87720
G100S	CB	AT	1000	198901	199301	DH-06	43410-87718	DH-06	43420-87718
G100S	CB TBO	MT	1000	198901	199301		43410-87719		43420-87719
G101S	CL	MT	1000	198901	199301	DH-06	43410-87720	DH-07	43420-87720
G101S	CL TBO	MT	1000	198901	199301	DH-06	43410-87720	DH-07	43420-87720
G101S	CL TBO	AT	1000	198901	199301	DH-06	43410-87718	DH-06	43420-87718
G102S	HC	MT	1300	198801	198901	DH-03	43410-87714	DH-04	43420-87714
G102S	HC	MT	1300	198801	198901	DH-03	43410-87728	DH-04	43420-87728
G102S	HC	MT	1300	198801	198901	DH-03	43410-87732	DH-04	43420-87732
G102S	HC	AT	1300	198801	198901	DH-03	43410-87715	DH-04	43420-87715
G102S	HC	AT	1300	198801	198901	DH-03	43410-87729	DH-04	43420-87729
G102S	HC	AT	1300	198801	198901	DH-03	43410-87733	DH-04	43420-87733
G102S	HC-E	MT	1300	198801	198901	DH-03	43410-87732	DH-04	43420-87732
G102S	HC-E	AT	1300	198801	198901	DH-03	43410-87733	DH-04	43420-87733
G112S 4WD	HC-E	MT	1300	198801	198901		43410-87736		43420-87736
G102S	HC	MT	1300	198901	199001	DH-06	43410-87730	DH-07	43420-87730
G102S	HC	MT	1300	198901	199001	DH-06	43410-87722	DH-07	43420-87722
G102S	HC	AT	1300	198901	199301	DH-06	43410-87725	DH-07	43420-87725
G102S	HC	MT	1300	198901	199301	DH-06	43460-87F89	DH-07	43470-87F89
G102S	HC	MT	1300	198901	199301	DH-06	43460-87F88	DH-07	43470-87F88
G102S	HC-F	MT	1300	198901	199011	DH-06	43410-87730	DH-07	43420-87730
G102S	HC-F	AT	1300	198901	199011	DH-06	43410-87725	DH-07	43420-87725
G102S	HC-E	MT	1300	198901	199011	DH-07	43410-87721	DH-07	43420-87721

DAIHATSU

MODEL	ENGINE	AT/MT	CC	YEAR	YEAR	OUTER	O.E No.R	ASVA No.L	O.E No.L
G102S	HC-E	AT	1300	198901	199301	DH-06	43410-87725	DH-07	43420-87725
G112S 4WD	HC-E	MT	1300	198901	199301		43410-87723		43420-87723
G112S 4WD	HC-E	MT	1300	198901	199301	DH-07	43410-87721	DH-07	43420-87721
G102S	HC-E	MT	1300	199011	199301	DH-06	43410-87730	DH-07	43420-87730
G200S	HC-E	5MT	1300	199301	199309	DH-20	43410-87740/1	DH-20	43420-87740
G200S	HC-E	5MT	1300	199301	199309	DH-20	43460-87F95	DH-20	43470-87F94
G200S	HC-E	5MT	1300	199301	199309	DH-21	43410-87742	DH-21	43420-87742
G200S	HC-E	5MT	1300	199301	199309	DH-21	43460-87F93	DH-21	43470-87F93
G200S	HC-E	5MT	1300	199301	199309	DH-33	43410-87747	DH-33	43420-87745
G200S	HC-E	5MT	1300	199301	199309	DH-33	43410-87748	DH-33	43420-87746
G200S	HC-E	4AT	1300	199301	200005	DH-17	43410-87749	DH-17	43420-87749
G200S	HC-E	4AT	1300	199301	200005	DH-17	43460-87F92	DH-17	43470-87F92
G200S	HC-E	4AT	1300	199301	200005	DH-20	43410-87750	DH-20	43420-87750
G200S	HC-E	4AT	1300	199301	200005	DH-20	43460-87F97	DH-20	43470-87F96
G200S	HC-E	4AT	1300	199301	200005	DH-33	43410-87746	DH-21	43420-87751
G200S	HC-E	4AT	1300	199301	200005		43470-87F97	DH-21	43470-87F95
G200S	HC-E	4AT	1300	199301	200005	DH-33	43410-87756	DH-33	43420-87745
G200S	HC-E	4AT	1300	199301	200005	DH-33	43410-87757	DH-21	43420-87751
G200S	HC-E	4AT	1300	199301	200005		43410-87751	DH-21	43420-87751
G213S 4WD	HE-EG	5MT	1500	199307	199608	DH-21	43410-87767	DH-16	43420-87765
G213S 4WD	HE-EG	4AT	1500	199307	199608	DH-21	43410-87766	DH-16	43420-87766
G213S 4WD	HE-EG	4AT	1500	199307	199608	DH-21	43410-87767	DH-21	43420-87767
G203S	HE-EG	4AT	1500	199307	200005	DH-33	43410-87746	DH-18	43420-87754
G213S 4WD	HE-EG	5MT	1500	199307	199608	DH-21	43410-87766	DH-16	43420-87739
G203S	HE-EG	5MT	1500	199308	199608	DH-18	43410-87763	DH-33	43420-87745
G203S	HE-EG	5MT	1500	199308	200005	DH-18	43460-87N83	DH-18	43460-87F98
G203S	HE-EG	5MT	1500	199308	200005	DH-33	43410-87746	DH-33	43420-87746
G203S	HE-EG	5MT	1500	199308	200005		43470-87F97		43470-87F97
G203S	HE-EG	5MT	1500	199308	200005	DH-33	43410-87747	DH-33	43420-87745
G203S	HE-EG	5MT	1500	199308	200005	DH-33	43460-87F98	DH-33	43460-87F98
G203S	HE-EG	5MT	1500	199308	200005	DH-33	43410-87748	DH-33	43420-87746
G203S	HE-EG	4AT	1500	199308	200005	DH-21	43410-87766	DH-18	43420-87754
G203S	HE-EG	4AT	1500	199308	200005	DH-21	43460-87N81	DH-18	43460-87F99
G203S	HE-EG	4AT	1500	199308	200005	DH-16	43460-87N82	DH-18	43460-87F99
G203S	HE-EG	4AT	1500	199308	200005	DH-33	43410-87755	DH-33	43420-87755
G203S	HE-EG	4AT	1500	199308	200005		43470-87F98		43470-87F98
G203S	HE-EG	4AT	1500	199308	200005	DH-33	43410-87756	DH-33	43420-87745
G203S	HE-EG	4AT	1500	199308	200005	DH-33	43410-87757	DH-33	43420-87755
G213S 4WD	HE-EG	5MT	1500	199308	200005	DH-18	43410-87763	DH-16	43420-87739
G213S 4WD	HE-EG	5MT	1500	199308	200005	DH-18	43410-87763	DH-16	43470-87N82
G213S 4WD	HE-EG	5MT	1500	199308	200005	DH-33	43410-87747	DH-33	43420-87745
G213S 4WD	HE-EG	5MT	1500	199308	200005	DH-33	43410-87748	DH-33	43420-87746
G213S 4WD	HE-EG	4AT	1500	199308	200005	DH-33	43410-87756	DH-33	43420-87745
G213S 4WD	HE-EG	4AT	1500	199308	200005	DH-33	43410-87757	DH-33	43420-87755
G203S	HE-EG	5MT	1500	199608	200005		43410-87789	DH-33	43420-87745
G203S	HE-EG	5MT	1500	199608	200005	DH-33	43410-87790	DH-33	43420-87746
G203S	HE-EG	4AT	1500	199608	200005	DH-33	43410-87791	DH-33	43420-87755
G213S 4WD	HE-EG	5MT	1500	199608	200005		43410-87788		43420-87776
G213S 4WD	HE-EG	4AT	1500	199608	200005		43410-87788		43420-87778
G213S 4WD	HE-EG	4AT	1500	199608	200005		43410-87788		43420-87778
G201S	HD-EG	5MT	1600	199307	199608	DH-18	43410-87745	DH-33	43420-87746
G201S	HD-EG	5MT	1600	199307	200005	DH-18	43410-87745	DH-33	43420-87746
G201S	HD-EG	4AT	1600	199307	199608	DH-18	43410-87754	DH-33	43420-87755
G201S	HD-EG	4AT	1600	199307	200005	DH-33	43410-87754	DH-33	43420-87755
G201S	HD-EG	5MT	1600	199308	200005	DH-18	43410-87745	DH-33	43420-87745
G201S	HD-EG	5MT	1600	199308	200005	DH-33	43460-87F98	DH-33	43460-87F98
G201S	HD-EG	5MT	1600	199308	200005	DH-33	43410-87746	DH-33	43420-87746
G201S	HD-EG	5MT	1600	199308	200005		43470-87F97		43470-87F97
G201S	HD-EG	5MT	1600	199308	200005	DH-33	43410-87747	DH-33	43420-87745
G201S	HD-EG	5MT	1600	199308	200005	DH-33	43410-87748	DH-33	43420-87746
G201S	HD-EG	4AT	1600	199308	200005	DH-18	43410-87754	DH-18	43420-87754
G201S	HD-EG	4AT	1600	199308	200005	DH-33	43460-87F99	DH-18	43460-87F99
G201S	HD-EG	4AT	1600	199308	200005	DH-33	43410-87755	DH-33	43420-87755
G201S	HD-EG	4AT	1600	199308	200005		43470-87F98		43470-87F98
G201S	HD-EG	4AT	1600	199308	200005	DH-33	43410-87756	DH-33	43420-87745
G201S	HD-EG	4AT	1600	199308	200005	DH-33	43460-87F99	DH-33	43460-87F98
G201S	HD-EG	4AT	1600	199308	200005	DH-33	43410-87757	DH-33	43420-87755
G201S	HD-EG	4AT	1600	199308	200005		43470-87F97		43470-87F98
G201S	HD-EG	5MT	1600	199608	200005		43410-87779		43420-87780
G201S	HD-EG	4AT	1600	199608	200005		43410-87783		43420-87784
DELTA VAN/WAGON									
CR51J 4WD	2C	5MT	2000	199610	199712		43410-28020		43420-28020
CR51J 4WD	2C	5MT	2000	199610	199712		43410-28010		43420-28010
CR51J 4WD	2C	5MT	2000	199801	199812		43410-28021		43420-28021
CR51J 4WD	2C	5MT	2000	199801	199812		43410-28011		43420-28011
CR50N 4WD	3S-FE	4AT	2000	199801			43410-28021		43420-28021
CR50N 4WD	3S-FE	4AT	2000	199801			43410-28011		43420-28011
CR50N 4WD	3C-T	MT/AT	2200	199610	199712		43410-28020		43420-28020
CR50N 4WD	3C-T	MT/AT	2200	199610	199712		43410-28010		43420-28010
CR50N 4WD	3C-T	MT/AT	2200	199801	199812		43410-28021		43420-28021
CR50N 4WD	3C-T	MT/AT	2200	199801	199812		43410-28011		43420-28011

DAIHATSU

MODEL	ENGINE	AT/MT	CC	YEAR	YEAR	OUTER	O.E No.R	ASVA No.L	O.E No.L
CR50N 4WD	3C-TE	4AT	2200	199901			43410-28021		43420-28021
CR50N 4WD	3C-TE	4AT	2200	199901			43410-28011		43420-28011
CR52J 4WD	3C-E	4AT	2200	199901			43410-28021		43420-28021
CR52J 4WD	3C-E	4AT	2200	199901			43410-28011		43420-28011
FEROZA									
-	HD	5MT	1300	199001		DH-31	43410-87606	DH-31	43420-87606
-	HD	5MT	1300	199001		DH-31	43410-87608	DH-31	43420-87608
HIJET CARGO									
S210V 4WD	EF-VE	MT/AT	660	199901			43410-97503		43420-97502
S210V 4WD	EF-VE	MT/AT	660	199901			43410-97502		43420-97501
S210V 4WD	EF-SE	5MT	660	199901			43410-97503		43420-97502
S210V 4WD	EF-SE	5MT	660	199901			43410-97502		43420-97501
HIJET									
1S83 4WD	EF	4/5MT	660	199004	199312	DH-13	43410-87510	DH-13	43420-87512
1S83 4WD	EF	4/5MT	660	199004	199312	DH-13	43460-87590	DH-13	43470-87590
S110 4WD	EF-NS	5MT	660	199401	199812	DH-23	43410-87514	DH-23	43420-87514
S110 4WD	EF-NS	5MT	660	199401	199812	DH-23	43410-87512	DH-23	43420-87515
S110 4WD	EF-ES	MT/AT	660	199401	199812	DH-23	43410-87514	DH-23	43420-87514
S110 4WD	EF-ES	MT/AT	660	199401	199812	DH-23	43410-87512	DH-23	43420-87515
S210P 4WD	EF-VE	MT/AT	660	199901			43410-97502		43420-97501
S210P	EF-VE	MT/AT	660	199901			43410-97503		43420-97502
S210P	EF-VE	5MT	660	199901			43410-97505		43420-97503
LEEZA									
L100	EB	MT	550	198611	198708	DH-09	43410-87222	DH-09	43420-87222
L100	EB	2AT	550	198611	198708	DH-10	43410-87223	DH-10	43420-87223
L100	EB TBO	5MT	550	198611	199007	DH-09	43410-87222	DH-09	43420-87222
L100	EB TBO	AT	550	198611	199007	DH-10	43410-87223	DH-10	43420-87223
L100	EB	MT	550	198708	199007	DH-10	43410-87226	DH-10	43420-87226
L100	EB	2AT	550	198708	198810	DH-09	43410-87227	DH-09	43420-87227
L100	EB	2AT	550	198901	199007	DH-10	43410-87225	DH-10	43420-87225
L100	EB	3AT	550	198901	199007		43410-87232		43420-87232
L111S	EF-HL	MT/AT	660	199008	199207	DH-10	43410-87243	DH-10	43420-87243
L111S	EF-JL TBO	MT/AT	660	199101	199207	DH-10	43410-87235	DH-10	43420-87234
MAX									
L950S	EF-VE	MT/AT	660	200111			43410-97218		43420-97210
L950S	EF-DET	AT	660	200111	200201	DH-29	43410-97235	DH-29	43420-97219
L952S	JB-DET	AT	660	200111	200201	DH-29	43410-97237	DH-29	43420-97219
L960S 4WD	EF-VE	MT/AT	660	200111	200201	DH-14	43410-97217	DH-29	43420-97218
L960S 4WD	EF-DET	AT	660	200111	200201	DH-14	43410-97217	DH-29	43420-97218
L962S 4WD	JB-DET	AT	660	200111	200201	DH-14	43410-97217	DH-29	43420-97218
L950S	EF-DET	AT	660	200201		DH-29	43410-97242	DH-29	43420-97222
L952S	JB-DET	AT	660	200201		DH-29	43410-97240	DH-29	43420-97222
L960S 4WD	EF-VE	MT/AT	660	200201		DH-29	43410-97238	DH-29	43420-97220
L960S 4WD	EF-DET	AT	660	200201		DH-29	43410-97238	DH-29	43420-97220
L962S 4WD	JB-DET	4AT	660	200201		DH-29	43410-97238	DH-29	43420-97220
MIRA CUORE									
L70S V	EB TBO	5MT	550	198508	199002	DH-09	43410-87222	DH-09	43420-87222
L70V	EB TBO	AT	550	198508	199002	DH-10	43410-87223	DH-10	43420-87223
L70S V	EB	2AT	550	198508	198708	DH-10	43410-87225	DH-10	43420-87225
L70S V	EB	MT	550	198508	198708	DH-09	43410-87224	DH-09	43420-87224
L71V 4WD	EB	MT	550	198508	199002	DH-09	43410-87222	DH-09	43420-87222
L70S V	EB	MT	550	198708	199002	DH-10	43410-87226	DH-10	43420-87226
L70S V	EB	2AT	550	198708	198810	DH-09	43410-87227	DH-09	43420-87227
L70S V	EB	2AT	550	198810	199002	DH-10	43410-87223	DH-10	43420-87223
L70V	EB	3AT	550	198810	199002		43410-87232		43420-87232
L80V	HANDY	MT/AT	660	198601	199301	DH-10	43410-87234	DH-10	43420-87234
L200S V	EF-CL	MT/AT	660	199003	199501	DH-11	43410-87242	DH-11	43420-87242
L200S	EF-HL	MT/AT	660	199003	199501	DH-10	43410-87243	DH-10	43420-87243
L200V	EF-XL TBO	MT/AT	660	199003	199408	DH-10	43410-87235	DH-10	43420-87234
L200S	EF-JL TBO	MT/AT	660	199003	199408	DH-10	43410-87248	DH-10	43420-87241
L210S 4WD	EF-HL	MT	660	199003	199408	DH-10	43410-87243	DH-10	43420-87243
L200S	EF-JL TBO	MT/AT	660	199003	199408	DH-10	43410-87235	DH-10	43420-87234
L210S 4WD	EF-HL	MT	660	199003	199501	DH-11	43410-87242	DH-11	43420-87242
L210V 4WD	EF-CL	5MT	660	199004	199408	DH-11	43410-87242	DH-11	43420-87242
L220S 4WS	EF-JL TBO	MT/AT	660	199004	199307	DH-10	43410-87235	DH-10	43420-87234
L210S 4WD	EF-JL TBO	5MT	660	199011	199408	DH-10	43410-87235	DH-10	43420-87234
L220S 4WS	EF-HL	MT/AT	660	199012	199109	DH-10	43410-87243	DH-10	43420-87243
L200S	EF-EL	MT/AT	660	199108	199408	DH-10	43410-87243	DH-10	43420-87243
L210S 4WD	EF-JL TBO	4AT	660	199109	199408	DH-10	43410-87243	DH-10	43420-87243
L210S 4WD	EF-EL	MT/AT	660	199110	199404	DH-10	43410-87243	DH-10	43420-87243
L200S	EF-KL	MT/AT	660	199208	199404	DH-11	43410-87242	DH-11	43420-87242
L200S	EF-KL	MT/AT	660	199208	199408	DH-10	43410-87247	DH-10	43420-87241
L210S 4WD	EF-EL	AT	660	199208	199404	DH-10	43410-87240	DH-10	43420-87243
L210S 4WD	EF-EL	AT	660	199208	199307	DH-10	43410-87234	DH-10	43420-87234
L210S 4WD	EF-JL TBO	4AT	660	199208	199404	DH-10	43410-87240	DH-10	43420-87234
L210V 4WD	EF-EL	3AT	660	199208	199404	DH-10	43410-87240	DH-10	43420-87234
L210V 4WD	EF-EL	3AT	660	199208	199408	DH-10	43410-87258	DH-10	43420-87234
L200S	EF-EL	MT/AT	660	199404	199408	DH-10	43410-87256	DH-10	43420-87250
L200S	EF-KL	MT/AT	660	199405	199408		43410-87254		43420-87248
L200S	EF-KL	MT/AT	660	199405	199408		43410-87255		43420-87249

DAIHATSU

MODEL	ENGINE	AT/MT	CC	YEAR	YEAR	OUTER	O.E No.R	ASVA No.L	O.E No.L
L200S	EF-JL TBO	MT/AT	660	199405	199408	DH-10	43410-87257	DH-10	43420-87250
L200V	EF-CL	MT/AT	660	199405	199408		43410-87254		43420-87248
L200V	EF-CL	MT/AT	660	199405	199408		43410-87255		43420-87249
L210S 4WD	EF-HL	MT	660	199405	199408	DH-10	43410-87256	DH-10	43420-87250
L210S 4WD	EF-JL TBO	5MT	660	199405	199408	DH-10	43410-87256	DH-10	43420-87250
L210S 4WD	EF-JL TBO	4AT	660	199405	199408	DH-10	43410-87258	DH-10	43420-87250
L210S 4WD	EF-EL	AT	660	199405	199408	DH-10	43410-87258	DH-10	43420-87250
L210S 4WD	EF-EL	AT	660	199408	199501		43410-87263	DH-10	43420-87234
L502S	JB-EL	MT/AT	660	199408	199810	DH-10	43410-87245	DH-11	43420-87231
L502S	JB-EL	MT/AT	660	199408	199604	DH-10	43410-87245	DH-10	43420-87239
L510SV 4WD	EF-EL	5MT	660	199408	199510	DH-11	43410-87241	DH-11	43420-87231
L510SV 4WD	EF-EL	5MT	660	199408	199510	DH-10	43410-87253	DH-10	43420-87239
L510S 4WD	EF-EL	3AT	660	199408	199810	DH-10	43410-87246	DH-11	43420-87231
L510S 4WD	EF-EL	3AT	660	199408	199510	DH-10	43410-87246	DH-10	43420-87239
L500S	EF-KL	3AT	660	199408	199810	DH-10	43410-87246	DH-11	43420-87231
L500S	EF-KL	3AT	660	199408	199810	DH-10	43410-87246	DH-10	43420-87239
L500S	EF-EL	3AT	660	199408	199810	DH-10	43410-87246	DH-11	43420-87231
L500S	EF-EL	3AT	660	199408	199810	DH-10	43410-87246	DH-10	43420-87239
L500S	EF-JL TBO	MT/AT	660	199408	199810	DH-10	43410-87245	DH-10	43420-87246
L502S	JB-EL	MT/AT	660	199408	199604	DH-10	43410-87252	DH-10	43420-87240
L502S	JB-JL TBO	MT/AT	660	199408	199810	DH-10	43410-87249	DH-10	43420-87246
L502S	JB-EL TBO	MT/AT	660	199408	199810	DH-10	43410-87250	DH-10	43420-87240
L512S 4WD	JB-JL TBO	5MT	660	199408	199810	DH-10	43410-87249	DH-10	43420-87246
L500S V	EF-CL	MT/AT	660	199408	199510	DH-11	43410-87241	DH-11	43420-87231
L500S V	EF-CL	MT/AT	660	199408	199510	DH-10	43410-87253	DH-10	43420-87239
L500V	EF-CL	3AT	660	199408	199810	DH-10	43410-87246	DH-11	43420-87231
L500V	EF-CL	3AT	660	199408	199810	DH-10	43410-87246	DH-10	43420-87239
L510SV 4WD	EF-CL	5MT	660	199408	199510	DH-11	43410-87241	DH-11	43420-87231
L510SV 4WD	EF-CL	5MT	660	199408	199510	DH-10	43410-87253	DH-10	43420-87239
L500S	EK-KL	MT/AT	660	199408	199810	DH-11	43410-87241	DH-11	43420-87231
L500S	EK-KL	MT/AT	660	199408	199810	DH-10	43410-87253	DH-10	43420-87239
L500S	EF-EL	MT/AT	660	199408	199810	DH-11	43410-87241	DH-11	43420-87231
L500S	EF-EL	MT/AT	660	199408	199810	DH-10	43410-87253	DH-10	43420-87239
L500V	EF-CL	5MT	660	199408	199810	DH-11	43410-87241	DH-11	43420-87231
L500V	EF-CL	5MT	660	199408	199810	DH-10	43410-87253	DH-10	43420-87239
L210S 4WD	EF-EL	AT	660	199408	199409	DH-10	43410-87240	DH-10	43420-87234
L500S	EF-JL TBO	MT/AT	660	199408	199510	DH-10	43410-87249	DH-10	43420-87240
L512S 4WD	JB-JL TBO	5MT	660	199408	199810	DH-10	43410-87245	DH-10	43420-87246
L500S	EF-FL	3AT	660	199412	199810	DH-10	43410-87246	DH-11	43420-87231
L500S	EF-FL	3AT	660	199412	199810	DH-10	43410-87246	DH-10	43420-87239
L500S	EF-FL	MT	660	199412	199810	DH-10	43410-87253	DH-10	43420-87239
L500S	EF-EL	MT/AT	660	199510	199705	DH-10	43410-87252	DH-10	43420-87240
L510S 4WD	EF-EL	MT	660	199510	199705	DH-10	43410-87252	DH-10	43420-87240
L510S 4WD	EF-ZL	AT	660	199510	199705	DH-10	43410-87267	DH-10	43420-87240
L510S 4WD	EF-ZL	AT	660	199510	199705	DH-10	43410-87266	DH-10	43420-87240
L512S 4WD	JB-JL TBO	4AT	660	199510	199810	DH-10	43410-87267	DH-10	43420-87246
L700S/V	EF-SE /VE	MT/AT/CV	660	199810	199907	DH-14	43410-97221	DH-14	43420-97211
L700S/V	EF-SE /VE	MT/AT/CV	660	199810	200009	DH-14	43410-97224	DH-14	43420-97205
L700S	EF-DET	MT/AT	660	199810	199907	DH-14	43410-97205	DH-14	43420-97204
L710S/V 4WD	EF-SE /VE	MT/AT/CV	660	199810	200009	DH-14	43410-97217	DH-14	43420-97204
L710S/V 4WD	EF-SE /VE	MT/AT/CV	660	199810	199911	DH-14	43410-97217	DH-14	43420-97205
L710S 4WD	EF-DET	MT/AT	660	199810	199907	DH-14	43410-97217	DH-14	43420-97204
L700S/V	EF-SE /VE	MT/CVT	660	199908	199911	DH-14	43410-97221	DH-14	43420-97211
L700S/V	EF-SE /VE	3/4AT	660	199908	199911	DH-14	43410-97214	DH-14	43420-97209
L700S	EF-DET	5MT	660	199908	200009	DH-14	43410-97205	DH-14	43420-97204
L700S	EF-DET	4AT	660	199908	200009	DH-14	43410-97214	DH-14	43420-97209
L700S/V	EF-SE /VE	MT/AT/CV	660	199911		DH-14	43410-97221	DH-14	43420-97211
L700S/V	EF-SE /VE	MT/AT/CV	660	200009		DH-14	43410-97224	DH-14	43420-97214
L700S	EF-DET	5MT	660	200009		DH-14	43410-97234	DH-14	43420-97218
L700S	EF-DET	4AT	660	200009		DH-14	43410-97235	DH-14	43420-97219
L710S/V 4WD	EF-SE /VE	MT/AT/CV	660	200009		DH-14	43410-97217	DH-14	43420-97218
L710S 4WD	EF-DET	MT/AT	660	200009		DH-14	43410-97217	DH-14	43420-97218
L700S	EF-DET	4AT	660	200009	200109	DH-14	43410-97242	DH-14	43420-97222
L700S	EF-DET	5MT	660	200009	200109	DH-14	43410-97243	DH-14	43420-97220
L700S	EF-VE	4AT	660	200009	200304	DH-14	43410-97244	DH-14	43420-97221
L710S 4WD	EF-DET	4AT	660	200009	200109	DH-14	43410-97238	DH-14	43420-97220
L700S	EF-VE	4AT	660	200305		DH-14	43410-97255	DH-14	43420-97230

MOVE

L600S	EF-GL	MT/AT	660	199508	199810	DH-10	43410-87265	DH-10	43420-87254
L600S	EF-GL	MT/AT	660	199508	199810	DH-11	43410-87251	DH-11	43420-87253
L600S	EF-GL	MT/AT	660	199508	199810	DH-22	43410-87270	DH-22	43420-87256
L600S	EF-GL	MT/AT	660	199508	199810	DH-22	43410-87277	DH-22	43420-87256
L600S	EF-ZL	MT/AT	660	199508	199810	DH-10	43410-87265	DH-11	43420-87253
L600S	EF-ZL	MT/AT	660	199508	199810	DH-11	43410-87251	DH-11	43420-87253
L600S	EF-ZL	MT/AT	660	199508	199604	DH-22	43410-87270	DH-22	43420-87256
L602S	JB-JL TBO	MT/AT	660	199508	199604	DH-10	43410-87268	DH-10	43420-87255
L602S	JB-JL TBO	MT/AT	660	199508	199810	DH-11	43410-87251	DH-11	43420-87253
L602S	JB-JL TBO	MT/AT	660	199508	199604	DH-22	43410-87271	DH-22	43420-87256
L600S	EF-RL TBO	MT/AT	660	199508	199810	DH-10	43410-87268	DH-10	43420-87255
L600S	EF-RL TBO	MT/AT	660	199508	199810	DH-22	43410-87271	DH-22	43420-87256
L610S 4WD	EF-ZL	5MT	660	199508	199810	DH-10	43410-87265	DH-11	43420-87253

DAIHATSU

MODEL	ENGINE	AT/MT	CC	YEAR	YEAR	OUTER	O.E No.R	ASVA No.L	O.E No.L
L610S 4WD	EF-ZL	MT/AT	660	199508	199810	DH-11	43410-87251	DH-11	43420-87253
L610S 4WD	EF-ZL	MT/AT	660	199508	199810	DH-22	43410-87277	DH-22	43420-87256
L610S 4WD	EF-ZL	3AT	660	199508	199810	DH-10	43410-87269	DH-11	43420-87253
L610S 4WD	EF-ZL	3AT	660	199508	199810	DH-10	43410-87276	DH-11	43420-87253
L610S 4WD	EF-ZL	3AT	660	199508	199810	DH-22	43410-87278	DH-22	43420-87256
L610S 4WD	EF-ZL	MT	660	199508	199810	DH-10	43410-87265	DH-10	43420-87254
L610S 4WD	EF-ZL	AT	660	199508	199604	DH-10	43410-87269	DH-10	43420-87255
L600S	EF-RL TBO	MT/AT	660	199604		DH-11	43410-87251	DH-11	43420-87253
L600S	EF-RL TBO	MT/AT	660	199604	199810	DH-22	43410-87277	DH-22	43420-87256
L610S 4WD	EF-RL TBO	MT/AT	660	199604	199810	DH-10	43410-87275	DH-10	43420-87255
L610S 4WD	EF-RL TBO	MT/AT	660	199604	199810	DH-11	43410-87251	DH-11	43420-87253
L610S 4WD	EF-RL TBO	5MT	660	199604	199810	DH-22	43410-87277	DH-22	43420-87256
L610S 4WD	EF-RL TBO	AT	660	199604	199810	DH-22	43410-87278	DH-22	43420-87256
L600S	EF-ZL	MT/AT	660	199604	199810	DH-22	43410-87277	DH-22	43420-87256
L610S 4WD	EF-ZL	AT	660	199604	199810	DH-10	43410-87276	DH-10	43420-87255
L610S 4WD	EF-RL TBO	AT	660	199604	199810	DH-10	43410-87276	DH-10	43420-87255
L900S	EF-SE	MT/AT	660	199801	199911	DH-30	43410-97224	DH-24	43420-97205
L900S	EF-SE	MT/AT	660	199810	199911	DH-14	43410-97205	DH-14	43420-97204
L900S	EF-VE	MT/AT	660	199810	199911	DH-14	43410-97205	DH-14	43420-97204
L900S	EF-VE	MT/AT	660	199810	199911	DH-30	43410-97224	DH-24	43420-97205
L902S	JB-DET	MT/AT	660	199810	199911	DH-14	43410-97211	DH-14	43420-97204
L902S	JB-DET	MT/AT	660	199810	199911	DH-30	43410-97224	DH-24	43420-97205
L910S 4WD	EF-VE	MT/AT	660	199810	199911	DH-24	43410-97206	DH-14	43420-97202
L910S 4WD	EF-VE	MT/AT	660	199810	199911	DH-14	43410-97205	DH-14	43420-97211
L910S 4WD	EF-DET	MT/AT	660	199810	199911	DH-24	43410-97206	DH-14	43420-97202
L910S 4WD	EF-DET	MT/AT	660	199810	199911	DH-14	43410-97205	DH-14	43420-97211
L900S	EF-SE /VE	MT/AT	660	199810	199911	DH-30	43410-97219	DH-14	43420-97211
L900S	EF-DET	MT/AT	660	199810	199911	DH-30	43410-97219	DH-14	43420-97211
L910S 4WD	EF-VE	MT/AT/CV	660	199810	199911	DH-14	43410-97217	DH-30	43420-97205
L910S 4WD	EF-DET	MT/AT	660	199810	199911	DH-14	43410-97217	DH-14	43420-97204
L900S	EF-DET	4AT	660	199911	200009	DH-14	43410-97215	DH-30	43420-97209
L900S	EF-DET	5MT	660	199911	200009	DH-14	43410-97211	DH-14	43420-97204
L900S	EF-SE /VE	MT/AT/CV	660	199912		DH-30	43410-97229	DH-24	43420-97214
L902S	JB-DET	4AT	660	199912	200009	DH-14	43410-97215	DH-30	43420-97209
L910S 4WD	EF-VE /DE	MT/AT/CV	660	199912	200009	DH-14	43410-97217	DH-14	43420-97204
L902S	JB-DET	MT/AT	660	200009		DH-30	43410-97237	DH-29	43420-97219
L900S	EF-DET	5MT	660	200009			43410-97236		43420-97258
L900S	EF-DET	4AT	660	200009		DH-30	43410-97237	DH-29	43420-97219
L910S	EF-VE /DE	MT/AT/CV	660	200009		DH-14	43410-97217	DH-29	43420-97218
L912S 4WD	JB-DET	MT/AT	660	200109	200210	DH-14	43410-97217	DH-29	43420-97218
NAKED									
L750S	EF-VE	MT/AT	660	199911			43410-97218		43420-97210
L750S	EF-DET	4AT	660	199911		DH-29	43410-97242	DH-29	43420-97222
L750S	EF-DET	5MT	660	199911	200112	DH-29	43410-97234	DH-29	43420-97218
L760S 4WD	EF-VE	MT/AT	660	199911	200112	DH-14	43410-97217	DH-29	43420-97218
L760S 4WD	EF-DET	MT/AT	660	199911	200112	DH-14	43410-97217	DH-29	43420-97218
L750S	EF-DET	5MT	660	200201		DH-29	43410-97243	DH-29	43420-97220
L760S 4WD	EF-VE	MT/AT	660	200201		DH-29	43410-97238	DH-29	43420-97220
L760S 4WD	EF-DET	MT/AT	660	200201		DH-29	43410-97238	DH-29	43420-97220
OPTI									
L300S	EF-EL	MT/AT	660	199202	199507	DH-10	43410-87243	DH-10	43420-87243
L310S 4WD	EF-EL	MT	660	199202	199510	DH-10	43410-87243	DH-10	43420-87243
L310S 4WD	EF-EL	AT	660	199202	199510	DH-10	43410-87234	DH-10	43420-87234
L300S	EF-KL	MT/AT	660	199208	199308	DH-11	43410-87242	DH-11	43420-87242
L300S	EF-EL KL	MT/AT	660	199208	199410	DH-10	43410-87247	DH-10	43420-87241
L300S	EF-EL KL	MT/AT	660	199410	199510	DH-10	43410-87246	DH-10	43420-87241
L310S 4WD	EF-EL	MT	660	199410	199510		43410-87262		43420-87251
L300S	EF-EL	MT/AT	660	199501	199510		43410-87262		43420-87251
L310S 4WD	EF-EL	AT	660	199501	199510		43410-87263		43420-87251
L300S	EF-ZL	MT/AT	660	199510	199604		43410-87262		43420-87251
L300S	EF-ZL KL	MT/AT	660	199510	199811		43410-87264	DH-10	43420-87241
L310S 4WD	EF-ZL	MT	660	199510	199705		43410-87262		43420-87251
L310S 4WD	EF-ZL	AT	660	199510	199705		43410-87263		43420-87251
L300S	EF-KL	MT/AT	660	199601	199811		43410-87254		43420-87248
L300S	EF-ZL	MT/AT	660	199601	199811		43410-87272		43420-87257
L300S	EF-ZL KL	MT/AT	660	199601	199811		43410-87274		43420-87258
L310S 4WD	EF-ZL	MT	660	199601	199811		43410-87272		43420-87257
L310S 4WD	EF-ZL	AT	660	199601	199811		43410-87273		43420-87257
L802S	JB-DET	MT/AT	660	199811	199907	DH-14	43410-97211	DH-14	43420-97204
L800S	EF-SE /VE	MT/AT	660	199811	199907	DH-24	43410-97221	DH-14	43420-97211
L800S	EF-VE	MT/CVT	660	199811		DH-24	43410-97221	DH-14	43420-97211
L800S	EF-SE /VE	MT/AT/CV	660	199811	200002	DH-30	43410-97224	DH-24	43420-97205
L810S4WD	EF-SE /VE	MT/AT/CV	660	199811	199910	DH-14	43410-97217	DH-24	43420-97205
L810S4WD	EF-DET	MT/AT	660	199811	200009	DH-14	43410-97217	DH-14	43420-97204
L802S	JB-DET	5MT	660	199908	200002	DH-14	43410-97211	DH-14	43420-97204
L802S	JB-DET	3/4AT	660	199908	200002	DH-14	43410-97215	DH-14	43420-97209
L800S	EF-SE /VE	3/4AT	660	199908	200002	DH-14	43410-97214	DH-14	43420-97209
L800S	EF-SE /VE	MT/AT	660	199908		DH-24	43410-97221	DH-14	43420-97211
L810S4WD	EF-SE /VE	MT/AT/CV	660	199911	200009	DH-14	43410-97217	DH-14	43420-97204
L800S	EF-DET	5MT	660	200002	200009	DH-14	43410-97211	DH-14	43420-97204
L800S	EF-SE /VE	MT/AT/CV	660	200002		DH-30	43410-97224	DH-24	43420-97214

FIAT

MODEL	ENGINE	AT/MT	CC	YEAR	YEAR	ASVANo.R	O.E No.R	ASVANo.L	O.E No.L
BRAVA									
BRAVA (182)	1.4 (182.BG) 182 A5.000		1400	199510	200110	FT-004	9 260 1903	FT-004	9 260 1903
BRAVA (182)	1.4 12 V (182.BA) 182 A3.000		1400	199510	200110	FT-004	9 260 1903	FT-004	9 260 1903
BRAVA (182)	1.9 D 160 A7.000		1900	199510	200110	FT-004	9 260 1903	FT-004	9 260 1903
BRAVO									
BRAVO (182)	1.4 (182.AA) 182 A3.000		1400	199510	200110	FT-004	9 260 1903	FT-004	9 260 1903
BRAVO (182)	1.4 (182.AG) 182 A5.000		1400	199510	200110	FT-004	9 260 1903	FT-004	9 260 1903
BRAVO (182)	1.9 D 160 A7.000		1900	199510	200110	FT-004	9 260 1903	FT-004	9 260 1903
DUCATO									
DUCATO (230)	1.9 D 230 A2.000		1900	199403	200204	PG-53A54	9 566 722 180	PG-53A54	9 566 722 180
DUCATO (230)	1.9 D 230 A2.000		1900	199403	200204	PG-78A54	9 566 722 380	PG-78A54	9 566 722 380
DUCATO (230)	1.9 D Combinato 230 A2.000		1900	199403	200204	PG-53A54	9 566 722 180	PG-53A54	9 566 722 180
DUCATO (230)	1.9 D Combinato 230 A2.000		1900	199403	200204	PG-78A54	9 566 722 380	PG-78A54	9 566 722 380
DUCATO (230)	1.9 D D9B		1900	199403	200204	PG-53A54	9 566 722 180	PG-53A54	9 566 722 180
DUCATO (230)	1.9 D D9B		1900	199403	200204	PG-78A54	9 566 722 380	PG-78A54	9 566 722 380
DUCATO (230)	1.9 D DJY		1900	199403	200204	PG-53A54	9 566 722 180	PG-53A54	9 566 722 180
DUCATO (230)	1.9 D DJY		1900	199403	200204	PG-78A54	9 566 722 380	PG-78A54	9 566 722 380
DUCATO (230)	1.9 TD 230 A3.000		1900	199403	200204	PG-53A54	9 566 722 180	PG-53A54	9 566 722 180
DUCATO (230)	1.9 TD 230 A3.000		1900	199403	200204	PG-78A54	9 566 722 380	PG-78A54	9 566 722 380
DUCATO (230)	1.9 TD Combinato 230 A3.000		1900	199403	200204	PG-53A54	9 566 722 180	PG-53A54	9 566 722 180
DUCATO (230)	1.9 TD Combinato 230 A3.000		1900	199403	200204	PG-78A54	9 566 722 380	PG-78A54	9 566 722 380
DUCATO (230)	1.9 TD Panorama 230 A3.000		1900	199403	200204	PG-53A54	9 566 722 180	PG-53A54	9 566 722 180
DUCATO (230)	1.9 TD Panorama 230 A3.000		1900	199403	200204	PG-78A54	9 566 722 380	PG-78A54	9 566 722 380
DUCATO (230)	2.0 4x4 RFW		2000	199403	200204	PG-53A54	9 566 722 180	PG-53A54	9 566 722 180
DUCATO (230)	2.0 4x4 RFW		2000	199403	200204	PG-78A54	9 566 722 380	PG-78A54	9 566 722 380
DUCATO (230)	2.0 Combinato RFW		2000	199403	200204	PG-53A54	9 566 722 180	PG-53A54	9 566 722 180
DUCATO (230)	2.0 Combinato RFW		2000	199403	200204	PG-78A54	9 566 722 380	PG-78A54	9 566 722 380
DUCATO (230)	2.0 Panorama RFW		2000	199403	200204	PG-53A54	9 566 722 180	PG-53A54	9 566 722 180
DUCATO (230)	2.0 Panorama RFW		2000	199403	200204	PG-78A54	9 566 722 380	PG-78A54	9 566 722 380
DUCATO (230)	2.0 RFW		2000	199403	200204	PG-53A54	9 566 722 180	PG-53A54	9 566 722 180
DUCATO (230)	2.0 RFW		2000	199403	200204	PG-78A54	9 566 722 380	PG-78A54	9 566 722 380
DUCATO (230)	2.5 D 4x4 8140.67		2500	199403	200204	PG-53A54	9 566 722 180	PG-53A54	9 566 722 180
DUCATO (230)	2.5 D 4x4 8140.67		2500	199403	200204	PG-78A54	9 566 722 380	PG-78A54	9 566 722 380
DUCATO (230)	2.5 D 8140.67		2500	199403	200204	PG-53A54	9 566 722 180	PG-53A54	9 566 722 180
DUCATO (230)	2.5 D 8140.67		2500	199403	200204	PG-78A54	9 566 722 380	PG-78A54	9 566 722 380
DUCATO (230)	2.5 D Combinato 8140.67		2500	199403	200204	PG-53A54	9 566 722 180	PG-53A54	9 566 722 180
DUCATO (230)	2.5 D Combinato 8140.67		2500	199403	200204	PG-78A54	9 566 722 380	PG-78A54	9 566 722 380
DUCATO (230)	2.5 TDI 4x4 8140.47		2500	199403	200204	PG-53A54	9 566 722 180	PG-53A54	9 566 722 180
DUCATO (230)	2.5 TDI 4x4 8140.47		2500	199403	200204	PG-78A54	9 566 722 380	PG-78A54	9 566 722 380
DUCATO (230)	2.5 TDI 8140.47		2500	199403	200204	PG-53A54	9 566 722 180	PG-53A54	9 566 722 180
DUCATO (230)	2.5 TDI 8140.47		2500	199403	200204	PG-78A54	9 566 722 380	PG-78A54	9 566 722 380
DUCATO (230)	2.5 TDI Combinato 8140.47		2500	199403	200204	PG-53A54	9 566 722 180	PG-53A54	9 566 722 180
DUCATO (230)	2.5 TDI Combinato 8140.47		2500	199403	200204	PG-78A54	9 566 722 380	PG-78A54	9 566 722 380
DUCATO (230)	2.5 TDI Panorama 8140.47		2500	199403	200204	PG-53A54	9 566 722 180	PG-53A54	9 566 722 180
DUCATO (230)	2.5 TDI Panorama 8140.47		2500	199403	200204	PG-78A54	9 566 722 380	PG-78A54	9 566 722 380
DUCATO (230)	1.9 TD CAT 230 A4.000		2800	199403	200204	PG-53A54	9 566 722 180	PG-53A54	9 566 722 180
DUCATO (230)	1.9 TD CAT 230 A4.000		2800	199403	200204	PG-78A54	9 566 722 380	PG-78A54	9 566 722 380
DUCATO (230)	1.9 TD DHX (XUD9TF/L)		2800	199403	200204	PG-53A54	9 566 722 180	PG-53A54	9 566 722 180
DUCATO (230)	1.9 TD DHX (XUD9TF/L)		2800	199403	200204	PG-78A54	9 566 722 380	PG-78A54	9 566 722 380
DUCATO (230)	2.5 TDI Maxi 8140.47		2800	199403	200204	PG-53A54	9 566 722 180	PG-53A54	9 566 722 180
DUCATO (230)	2.5 TDI Maxi 8140.47		2800	199403	200204	PG-78A54	9 566 722 380	PG-78A54	9 566 722 380
DUCATO (230)	2.8 D 4x4 8140.63		2800	199403	200204	PG-53A54	9 566 722 180	PG-53A54	9 566 722 180
DUCATO (230)	2.8 D 4x4 8140.63		2800	199403	200204	PG-78A54	9 566 722 380	PG-78A54	9 566 722 380
DUCATO (230)	2.8 D 8140.63		2800	199403	200204	PG-53A54	9 566 722 180	PG-53A54	9 566 722 180
DUCATO (230)	2.8 D 8140.63		2800	199403	200204	PG-78A54	9 566 722 380	PG-78A54	9 566 722 380
DUCATO (230)	2.8 D 8140.63		2800	199403	200204	PG-53A54	9 566 722 180	PG-53A54	9 566 722 180
DUCATO (230)	2.8 D 8140.63		2800	199403	200204	PG-78A54	9 566 722 380	PG-78A54	9 566 722 380
DUCATO (230)	2.8 TDI 4x4 8140.43		2800	199403	200204	PG-53A54	9 566 722 180	PG-53A54	9 566 722 180
DUCATO (230)	2.8 TDI 4x4 8140.43		2800	199403	200204	PG-78A54	9 566 722 380	PG-78A54	9 566 722 380
DUCATO (230)	2.8 TDI 8140.43		2800	199403	200204	PG-53A54	9 566 722 180	PG-53A54	9 566 722 180
DUCATO (230)	2.8 TDI 8140.43		2800	199403	200204	PG-78A54	9 566 722 380	PG-78A54	9 566 722 380
FIORINO									
FIORINO Pick up (146)	1.4		1400	198801	199812	FT-003	5 998 706	FT-003	5 998 706
FIORINO (146 Uno)	60 1.1 146 A9.000		1100	198805		FT-003	5 998 706	FT-003	5 998 706
FIORINO (146 Uno)	70 i.e. 1.4 146 C5.000		1400	198805		FT-003	5 998 706	FT-003	5 998 706
FIORINO (146 Uno)	75 i.e. 1.5 149 C1.000		1500	198805		FT-003	5 998 706	FT-003	5 998 706
MAREA									
MAREA (185)	1.4 80 12V 182 A3.000		1400	199609		FT-004	9 260 1903	FT-004	9 260 1903
PANDA									
PANDA	750 141 B.000		750	198601		FT-003	5 998 706	FT-003	5 998 706
PANDA	1000 156 A2.100		1000	198601		FT-003	5 998 706	FT-003	5 998 706
PANDA	1000 156 A3.100		1000	198601		FT-003	5 998 706	FT-003	5 998 706
PANDA	1000 i.e 156 A2.246		1000	198601		FT-003	5 998 706	FT-003	5 998 706
PANDA (141A_)	650		650	198003		FT-003	5 998 706	FT-003	5 998 706
PANDA (141A_)	650 141 A.000		650	198003		FT-003	5 998 706	FT-003	5 998 706

FIAT

MODEL	ENGINE	AT/MT	CC	YEAR	YEAR	ASVANo.R	O.E No.R	ASVANo.L	O.E No.L
PANDA (141A_)	750 (141AA) 156 A4.000		750	198003		FT-003	5 998 706	FT-003	5 998 706
PANDA (141A_)	750 (141AI) 141 B.000		750	198003		FT-003	5 998 706	FT-003	5 998 706
PANDA (141A_)	750 (141AM) KAT 156 A4.048		750	198003		FT-003	5 998 706	FT-003	5 998 706
PANDA (141A_)	800		800	198003		FT-003	5 998 706	FT-003	5 998 706
PANDA (141A_)	900 100 GL3.000		900	198003		FT-003	5 998 706	FT-003	5 998 706
PANDA (141A_)	900 1170 A1.046		900	198003		FT-003	5 998 706	FT-003	5 998 706
PANDA (141A_)	900 146 A.000		900	198003		FT-003	5 998 706	FT-003	5 998 706
PANDA (141A_)	950 4x4 A 112 B1.054		950	198003		FT-003	5 998 706	FT-003	5 998 706
PANDA (141A_)	1000		1000	198003		FT-003	5 998 706	FT-003	5 998 706
PANDA (141A_)	1000		1000	198003		FT-003	5 998 706	FT-003	5 998 706
PANDA (141A_)	1000 156 A3.000		1000	198003		FT-003	5 998 706	FT-003	5 998 706
PANDA (141A_)	1000 4x4 141 C2.000		1000	198003		FT-003	5 998 706	FT-003	5 998 706
PANDA (141A_)	1000 4x4 156 A2.100		1000	198003		FT-003	5 998 706	FT-003	5 998 706
PANDA (141A_)	1000 4x4 156 A2.246		1000	198003		FT-003	5 998 706	FT-003	5 998 706
PANDA (141A_)	1000 4x4 156 A3.100		1000	198003		FT-003	5 998 706	FT-003	5 998 706
PANDA (141A_)	1000 i.e. KAT 141		1000	198003		FT-003	5 998 706	FT-003	5 998 706
PANDA (141A_)	1000 i.e. KAT 156		1000	198003		FT-003	5 998 706	FT-003	5 998 706
PANDA (141A_)	1,100,156		1100	198003		FT-003	5 998 706	FT-003	5 998 706
PANDA (141A_)	1,100,176		1100	198003		FT-003	5 998 706	FT-003	5 998 706
PANDA (141A_)	1100 4x4 176		1100	198003		FT-003	5 998 706	FT-003	5 998 706
PANDA (141A_)	1100 Trekking 4x4 156		1100	198003		FT-003	5 998 706	FT-003	5 998 706
PANDA (141A_)	1300 D 156		1300	198003		FT-003	5 998 706	FT-003	5 998 706
PUNTO									
PUNTO (176)	55 1.1 176		1100	199309	199909	FT-004	9 260 1903	FT-004	9 260 1903
PUNTO (176)	55 1.1 176		1100	199309	199909	FT-004	9 260 1903	FT-004	9 260 1903
PUNTO (176)	60 1.2 176		1200	199309	199909	FT-004	9 260 1903	FT-004	9 260 1903
PUNTO (176)	60 1.2 176		1200	199309	199909	FT-004	9 260 1903	FT-004	9 260 1903
PUNTO (176)	60 1.2 176		1200	199309	199909	FT-004	9 260 1903	FT-004	9 260 1903
PUNTO (176)	75 1.2 176		1200	199309	199909	FT-004	9 260 1903	FT-004	9 260 1903
PUNTO (176)	85 16V 1.2 176		1200	199309	199909	FT-004	9 260 1903	FT-004	9 260 1903
PUNTO (176)	90 1.6 176		1600	199309	199909	FT-004	9 260 1903	FT-004	9 260 1903
PUNTO CABRIO (176C)	60 1.2 176		1200	199404	200006	FT-004	9 260 1903	FT-004	9 260 1903
PUNTO CABRIO (176C)	60 1.2 176		1200	199404	200006	FT-004	9 260 1903	FT-004	9 260 1903
PUNTO CABRIO (176C)	60 1.2 176		1200	199404	200006	FT-004	9 260 1903	FT-004	9 260 1903
PUNTO CABRIO (176C)	85 16V 1.2 176		1200	199404	200006	FT-004	9 260 1903	FT-004	9 260 1903
PUNTO CABRIO (176C)	90 1.6 176		1600	199404	200006	FT-004	9 260 1903	FT-004	9 260 1903
UNO									
UNO (146A)	45 0.9 146 A.000		900	198301		FT-003	5 998 706	FT-003	5 998 706
UNO (146A)	45 0.9 146 A.1000		900	198301		FT-003	5 998 706	FT-003	5 998 706
UNO (146A)	45 1.0 (146A.ED) 156		1000	198301		FT-003	5 998 706	FT-003	5 998 706
UNO (146A)	45 1.0 (146A.ED) 156		1000	198301		FT-003	5 998 706	FT-003	5 998 706
UNO (146A)	45 i.e. 1.0 156		1000	198301		FT-003	5 998 706	FT-003	5 998 706
UNO (146A)	50 i.e. 1.1 146		1100	198301		FT-003	5 998 706	FT-003	5 998 706
UNO (146A)	55 1.1 138		1100	198301		FT-003	5 998 706	FT-003	5 998 706
UNO (146A)	60 1.1 (146A.EG) 146		1100	198301		FT-003	5 998 706	FT-003	5 998 706
UNO (146A)	1.3 Super Diesel 127		1300	198301		FT-003	5 998 706	FT-003	5 998 706
UNO (146A)	1.3 Super Diesel 146		1300	198301		FT-003	5 998 706	FT-003	5 998 706
UNO (146A)	70 1.3 138		1300	198301		FT-003	5 998 706	FT-003	5 998 706
UNO (146A)	70 1.3 149		1300	198301		FT-003	5 998 706	FT-003	5 998 706
UNO (146A)	70 i.e. 1.4		1400	198301		FT-003	5 998 706	FT-003	5 998 706
UNO (146A)	70 i.e. 1.4 160		1400	198301		FT-003	5 998 706	FT-003	5 998 706
UNO (146A)	75 i.e. 1.5 138		1500	198301		FT-003	5 998 706	FT-003	5 998 706
UNO (146A)	75 i.e. 1.5 149		1500	198301		FT-003	5 998 706	FT-003	5 998 706

FORD

MODEL	ENGINE	AT/MT	CC	YEAR	YEAR	OUTER	O.E No.R	INNER R	O.E No.IR	INNER L	O.E No.IL
EXPLORER											
	4.0L	AT/MT	4000	199306	199806	FD-115	3287052				
FOCUS											
DAW/DBW	1.4 16V FXD	AT/MT	1400	199810	200505	FD-809	XS4C3B413AA	FDIR-F1	1349157	FDIL-F1	1349160
DAW/DBW	1.6 16V FYD	AT/MT	1600	199810	200505	FD-809	XS4C3B413AA	FDIR-F1	1349157	FDIL-F1	1349160
DAW/DBW	1.8 16V EYD	AT/MT	1800	199810	200505	FD-809	XS4C3B413AA	FDIR-F1	1349157	FDIL-F1	1349160
DAW/DBW	1.8 TDDI	AT/MT	1800	199810	200505	FD-354	1361301				
DAW/DBW	1.8 TDDI	AT/MT	1800	199810	200505	FD-809	XS4C3B413AA				
DAW/DBW	1.8 TURBO	AT/MT	1800	199810	200505	FD-354	1361301				
DAW/DBW	1.8 TURBO	AT/MT	1800	199810	200505	FD-809	XS4C3B413AA				
DAW/DBW	2.0 EDD	AT/MT	2000	199810	200505	FD-354	1361301				
DAW/DBW	2.0 EDD	AT/MT	2000	199810	200505	FD-809	XS4C3B413AA				
DFW	1.4 16V FXD	AT/MT	1400	199810	200505	FD-809	XS4C3B413AA	FDIR-F1	1349157	FDIL-F1	1349160
DFW	1.6 16V FYD	AT/MT	1600	199810	200505	FD-809	XS4C3B413AA	FDIR-F1	1349157	FDIL-F1	1349160
DFW	1.8 16V EYD	AT/MT	1800	199810	200505	FD-809	XS4C3B413AA	FDIR-F1	1349157	FDIL-F1	1349160
DFW	1.8 TDDI	AT/MT	1800	199810	200505	FD-354	1361301				
DFW	1.8 TDDI	AT/MT	1800	199810	200505	FD-809	XS4C3B413AA				
DFW	1.8 TURBO	AT/MT	1800	199810	200505	FD-354	1361301				
DFW	1.8 TURBO	AT/MT	1800	199810	200505	FD-809	XS4C3B413AA				
DFW	2.0 EDD	AT/MT	2000	199810	200505	FD-354	1361301				
DFW	2.0 EDD	AT/MT	2000	199810	200505	FD-809	XS4C3B413AA				
DNW	1.4 16V FXD	AT/MT	1400	199810	200505	FD-809	XS4C3B413AA	FDIR-F1	1349157	FDIL-F1	1349160
DNW	1.6 16V FYD	AT/MT	1600	199810	200505	FD-809	XS4C3B413AA	FDIR-F1	1349157	FDIL-F1	1349160
DNW	1.8 16V EYD	AT/MT	1800	199810	200505	FD-809	XS4C3B413AA	FDIR-F1	1349157	FDIL-F1	1349160
DNW	1.8 TDDI	AT/MT	1800	199810	200505	FD-354	1361301				
DNW	1.8 TDDI	AT/MT	1800	199810	200505	FD-809	XS4C3B413AA				
DNW	1.8 TURBO	AT/MT	1800	199810	200505	FD-354	1361301				
DNW	1.8 TURBO	AT/MT	1800	199810	200505	FD-809	XS4C3B413AA				
DNW	2.0 EDD	AT/MT	2000	199810	200505	FD-354	1361301				
DNW	2.0 EDD	AT/MT	2000	199810	200505	FD-809	XS4C3B413AA				
FUSION											
JU	FXJ	MT	1400	200611						FDIL-FUS	1,477,836
JU	FYJ	MT	1600	200611						FDIL-FUS	1,477,836
FIESTA											
JH, JD	FXJ	MT	1400	200611						FDIL-FUS	1,477,836
JH, JD	FYJ	MT	1600	200611						FDIL-FUS	1,477,836
GALAXY											
VX/VY	TDI	AT/MT	1900	199505	199905	FD-075A48	1084716				
VX/VY	NSE	AT/MT	2000	199505	199912	FD-075A48	1084716				
VX/VY	NSE	AT/MT	2000	199505	200003	FD-075A48	1084716				
VX/VY	E5SA	AT/MT	2300	199705		FD-075A48	1084716				
VX/VY	AAA	MT	2800	199505	199912	FD-075A48	1084716				
VX/VY	AAA	AT/MT	2800	199505	200004	FD-075A48	1084716				
MONDEO											
1.6L I	66	MT	1600	199301	199608	FD-113A44	1023250				
1.6L I	66	MT	1600	199608	200011	FD-113A44	1023250				
1.8L I	85	AT/MT	1800	199301	199608	FD-113A44	1023250				
1.8L I	85	AT/MT	1800	199301	200011	FD-356A44	1023247				
1.8L I	85	AT/MT	1800	199301	199608	FD-113A44	1023250				
2.0L I	97	AT/MT	2000	199301	199608	FD-113A44	1023250				
2.0L I	100	AT/MT	2000	199306	199412	FD-356A44	1023247				
2.0L I	96	AT/MT	2000	199608	200011	FD-113A44	1023250				
2.0L I	96	MT	2000	200011			4106302	FDID-5024	1009653	FDID-5024	1009653
2.5L I	125	AT/MT	2500	199408	200011	FD-356A44	1023247				
PROBE											
2.0L 16V	85	AT/MT	2000	199310		MZ-10					
2.0L 16V	85	MT	2000	199310		MZ-10A44					
2.0L 16V	85	AT	2000	199310		MZ-056A44	G572-22-510	MZIP-555	3395862	MZID-554	3395864
PT22L	F2	AT	2200	198911	199209	MZ-10	G064-25-500				
CT22	KL	AT	2500	199209		MZ-056A44	G565-25-500B	MZIP-555	3395862	MZID-554	3395864
PT21U	AS	AT	3000	198911	199209		G065-25-500				

HONDA

MODEL	ENGINE	AT/MT	CC	YEAR	YEAR	OUTER	O.E No.R	INNER R	O.E No.IR	INNER L	O.E No.IL
ACCORD											
1SJ SM	EF	MT/AT	1600	197601	198901	HN-04	44305-671-003				
SJ SM	EF	MT/AT	1600	197601	197901	HN-04	44305-671-023				
SL	EF	MT/AT	1600	197601	198901	HN-04	44305-671-003				
SV	EP	MT/AT	1600	197601	198101	HN-06	44305-688-000				
SM120	EP	MT/AT	1600	197901	198001	HN-09	44305-689-010				
SM120	EP	MT/AT	1600	197901	198001	HN-09	44305-689-030				
SM200	EP	MT/AT	1600	198001	198101	HN-06	44305-688-000				
SM200	EP	MT/AT	1600	198001	198101	HN-06	44305-688-020				
SY SZ	EP	MT/AT	1600	198101	198201	HN-06	44305-SA5-000				
SY SZ	EP	MT/AT	1600	198101	198201	HN-06	44305-SA5-010				
AC	EY	AT	1600	198301	198501	HN-10	44305-SA5-020				
AC	EY	AT	1600	198301	198501	HN-10	44305-SA5-620				
AC	EY	AT	1600	198301	198501	HN-10	44305-SA5-640				
AC	EY	MT	1600	198301	198501	HN-10	44305-SA5-641				
AC	EY	MT	1600	198301	198501	HN-10	44305-SA5-020				
SJ SM	EK	MT/AT	1800	197601	197901	HN-04	44305-671-003				
SJ SM	EK	MT/AT	1800	197601	197901	HN-04	44305-671-023				
SJ	EK	MT/AT	1800	197601	198101	HN-06	44305-688-000				
SM	EK	MT/AT	1800	197901	198101	HN-04	44305-689-601				
SM120	EK	MT/AT	1800	197901	198001	HN-09	44305-689-010				
SM120	EK	MT/AT	1800	197901	198001	HN-09	44305-689-030				
SV100	EK	MT/AT	1800	198001	198101	HN-06	44305-688-000				
SV100	EK	MT/AT	1800	198001	198101	HN-06	44305-688-020				
SY	EK	MT/AT	1800	198101	198201	HN-06	44305-SA5-000				
SY	EK	MT/AT	1800	198101	198201	HN-06	44305-SA5-010				
SZ	EK	MT/AT	1800	198101	198301	HN-06	44305-SA5-000				
AD	ES	AT	1800	198301	198501	HN-18	44305-SA5-622				
AD	ES	AT	1800	198301	198501	HN-18	44305-SA5-970				
AD	ES	MT	1800	198301	198501	HN-18	44305-SA5-622				
AD	ES	MT	1800	198301	198501	HN-18	44305-SA5-971				
AD	ES	AT	1800	198301	198501	HN-10	44305-SA5-020				
AD	ES	MT	1800	198301	198501	HN-10	44305-SA5-020				
CA1	A18A	AT	1800	198501	198901	HN-19	44305-SE0-000				
CA1	A18A	MT	1800	198501	198901	HN-19	44305-SE0-000				
CA2	A18A	AT	1800	198501	198901	HN-20	44305-SE0-922				
CA1	A18A	AT	1800	198506	198909	HN-19	44305-SE0-010				
CA1	A18A	AT	1800	198506	198909	HN-19	44305-SE0-J00				
CA1	A18A	AT	1800	198506	198909	HN-19A50	44305-SE0-951				
CA1	A18A	AT	1800	198506	198909	HN-19A50	44305-SE0-J51				
CA1	A18A	MT	1800	198506	198909	HN-19	44305-SE0-010				
CA1	A18A	MT	1800	198506	198909	HN-19A50	44305-SE0-951				
CA2	B18A	AT	1800	198506	198909	HN-20	44305-SE0-923				
CA2	B18A	AT	1800	198506	198909	HN-20A50	44305-SE0-964				
CA2	B18A	MT	1800	198506	198909	HN-20	44305-SE0-923				
CA2	B18A	MT	1800	198506	198909	HN-20A50	44305-SE0-964				
CB1	F18A	MT	1800	198901	199309	HN-22	44305-SM4-010	HNIP-516	44310-SM1-980	HNID-507	44310-SM1-900
CB1	F18A	MT	1800	198901	199309	HN-22	44305-SM4-020	HNIP-516	44310-SM1-980	HNID-507	44310-SM1-900
CB1	F18A	MT	1800	198901	199309	HN-22	44305-SM4-040	HNIP-516	44310-SM1-980	HNID-507	44310-SM1-900
CB2 4WS	F18A	MT	1800	198901	199309	HN-22	44305-SM4-010	HNIP-516	44310-SM1-980	HNID-507	44310-SM1-900
CB2 4WS	F18A	MT	1800	198901	199309	HN-22	44305-SM4-020	HNIP-516	44310-SM1-980	HNID-507	44310-SM1-900
CB2 4WS	F18A	MT	1800	198901	199309	HN-22	44305-SM4-040	HNIP-516	44310-SM1-980	HNID-507	44310-SM1-900
CB1	F18A	AT	1800	198901	199309	HN-22	44305-SM4-980	HNIP-516	44310-SM1-980	HNIP-516	44310-SM1-980
CB1	F18A	AT	1800	198901	199309	HN-22	44305-SM4-981	HNIP-516	44310-SM1-980	HNIP-516	44310-SM1-980
CB2 4WS	F18A	AT	1800	198901	199309	HN-22	44305-SM4-983	HNIP-516	44310-SM1-980	HNIP-516	44310-SM1-980
CB1	F18A	AT	1800	198901	199309	HN-22	44305-SM4-984	HNIP-516	44310-SM1-980	HNIP-516	44310-SM1-980
CB2 4WS	F18A	AT	1800	198901	199309	HN-22	44305-SM4-983	HNIP-516	44310-SM1-980	HNIP-516	44310-SM1-980
CB2 4WS	F18A	AT	1800	198901	199309	HN-22	44305-SM4-984	HNIP-516	44310-SM1-980	HNIP-516	44310-SM1-980
CB1	F18A	MT	1800	198901	199309	HN-22A50	44305-SM4-950	HNIP-516	44310-SM1-980	HNID-507	44310-SM1-900
CB1	F18A	MT	1800	198901	199309	HN-22A50	44305-SM4-952	HNIP-516	44310-SM1-980	HNID-507	44310-SM1-900
CB1	F18A	MT	1800	198901	199309	HN-22A50	44305-SM4-953	HNIP-516	44310-SM1-980	HNID-507	44310-SM1-900
CB2 4WS	F18A	MT	1800	198901	199309	HN-22A50	44305-SM4-950	HNIP-516	44310-SM1-980	HNID-507	44310-SM1-900
CB2 4WS	F18A	MT	1800	198901	199309	HN-22A50	44305-SM4-952	HNIP-516	44310-SM1-980	HNID-507	44310-SM1-900
CB2 4WS	F18A	MT	1800	198901	199309	HN-22A50	44305-SM4-954	HNIP-516	44310-SM1-980	HNID-507	44310-SM1-900
CB1	F18A	AT	1800	198901	199309	HN-22A50	44305-SM4-J80	HNIP-516	44310-SM1-980	HNIP-516	44310-SM1-980
CB1	F18A	AT	1800	198901	199309	HN-22A50	44305-SM4-J81	HNIP-516	44310-SM1-980	HNIP-516	44310-SM1-980
CB1	F18A	AT	1800	198901	199309	HN-22A50	44305-SM4-J83	HNIP-516	44310-SM1-980	HNIP-516	44310-SM1-980
CB1	F18A	AT	1800	198901	199309	HN-22A50	44305-SM4-J84	HNIP-516	44310-SM1-980	HNIP-516	44310-SM1-980
CB2 4WS	F18A	AT	1800	198901	199309	HN-22A50	44305-SM4-J80	HNIP-516	44310-SM1-980	HNIP-516	44310-SM1-980
CB2 4WS	F18A	AT	1800	198901	199309	HN-22A50	44305-SM4-J81	HNIP-516	44310-SM1-980	HNIP-516	44310-SM1-980
CB2 4WS	F18A	AT	1800	198901	199309	HN-22A50	44305-SM4-J83	HNIP-516	44310-SM1-980	HNIP-516	44310-SM1-980
CB2 4WS	F18A	AT	1800	198901	199309	HN-22A50	44305-SM4-J84	HNIP-516	44310-SM1-980	HNIP-516	44310-SM1-980
CD3	F18B	MT	1800	199309	199709	HN-22	44010-SV4-010	HNIP-M11	44310-SM4-310		
CD3	F18B	MT	1800	199309	199709	HN-22A50	44010-SV4-951	HNIP-M11	44310-SM4-310		
CD3	F18B	AT	1800	199309	199709	HN-22	44010-SV4-000				
CD3	F18B	AT	1800	199309	199709	HN-22A50	44010-SV4-950				
CD3	F18B	AT	1800	199309	199709	HN-22	44010-SV4-010				
CD3	F18B	AT	1800	199309	199709	HN-22A50	44010-SV4-N60				
CD3	F18B	AT	1800	199309	199709	HN-22A50	44010-SV4-951				
CD3	F18B	AT	1800	199309	199709	HN-22	44010-SV4-000				
CD3	F18B	AT	1800	199309	199709	HN-22A50	44010-SV4-950				

HONDA

MODEL	ENGINE	AT/MT	CC	YEAR	YEAR	OUTER	O.E No.R	INNER R	O.E No.IR	INNER L	O.E No.IL
CF3	F18B	5MT	1800	199709		HN-29A50	44010-S0A-J50				
CF3	F18B	5MT	1800	199709		HN-55A50	44010-S0A-950				
CF3	F18B	4AT	1800	199709		HN-29A50	44010-S0A-J50				
CF3	F18B	4AT	1800	199709		HN-55A50	44010-S0A-950				
CG	F18B2	5MT	1800	199810	200207	HN-ACEA50	44014-S1A-E01				
CG	F18B2	4AT	1800	199810	200207	HN-ACEA50	44014-S1A-E01				
CA3	B20A	MT/AT	2000	198506	198909	HN-20	44305-SE0-J21				
CB3	F20A	MT	2000	198901	199309	HN-22A50	44305-SM4-050	HNIP-M11	44310-SM4-310	HNID-507	44310-SM1-900
CB3	F20A	MT	2000	198901	199309	HN-22A50	44305-SM4-060	HNIP-M11	44310-SM4-310	HNID-507	44310-SM1-900
CB4 4WS	F20A	MT	2000	198901	199309	HN-22A50	44305-SM4-050	HNIP-M11	44310-SM4-310	HNID-507	44310-SM1-900
CB4 4WS	F20A	MT	2000	198901	199309	HN-22A50	44305-SM4-060	HNIP-M11	44310-SM4-310	HNID-507	44310-SM1-900
CB3	F20A	AT	2000	198901	199309	HN-22A50	44305-SM4-984	HNIP-516	44310-SM1-980	HNIP-516	44310-SM1-980
CB4 4WS	F20A	AT	2000	198901	199309	HN-22A50	44305-SM4-981	HNIP-516	44310-SM1-980	HNIP-516	44310-SM1-980
CB3	F20A	AT	2000	198901	199309	HN-22A50	44305-SM4-J80	HNIP-516	44310-SM1-980	HNID-507	44310-SM1-900
CB3	F20A	AT	2000	198901	199309	HN-22A50	44305-SM4-J81	HNIP-516	44310-SM1-980	HNID-507	44310-SM1-900
CB4 4WS	F20A	AT	2000	198901	199309	HN-22A50	44305-SM4-J83	HNIP-516	44310-SM1-980	HNID-507	44310-SM1-900
CB4 4WS	F20A	AT	2000	198901	199309	HN-22A50	44305-SM4-J84	HNIP-516	44310-SM1-980	HNID-507	44310-SM1-900
CB3	F20A	MT	2000	198901	199309	HN-22	44305-SM4-040	HNIP-M11	44310-SM4-310	HNID-507	44310-SM1-900
CB4 4WS	F20A	MT	2000	198901	199309	HN-22	44305-SM4-010	HNIP-M11	44310-SM4-310	HNID-507	44310-SM1-900
CB4 4WS	F20A	MT	2000	198901	199309	HN-22	44305-SM4-020	HNIP-M11	44310-SM4-310	HNID-507	44310-SM1-900
CB3	F20A	AT	2000	198901	199309	HN-22	44305-SM4-983	HNIP-516	44310-SM1-980	HNIP-516	44310-SM1-980
CB3	F20A	AT	2000	198901	199309	HN-22	44305-SM4-984	HNIP-516	44310-SM1-980	HNIP-516	44310-SM1-980
CB4 4WS	F20A	AT	2000	198901	199309	HN-22	44305-SM4-980	HNIP-516	44310-SM1-980	HNIP-516	44310-SM1-980
CB4 4WS	F20A	AT	2000	198901	199309	HN-22	44305-SM4-981	HNIP-516	44310-SM1-980	HNIP-516	44310-SM1-980
CB3	F20A	MT	2000	198901	199309	HN-22A50	44305-SM4-950	HNIP-M11	44310-SM4-310	HNID-507	44310-SM1-900
CB3	F20A	MT	2000	198901	199309	HN-22A50	44305-SM4-952	HNIP-M11	44310-SM4-310	HNID-507	44310-SM1-900
CB3	F20A	MT	2000	198901	199309	HN-22A50	44305-SM4-953	HNIP-M11	44310-SM4-310	HNID-507	44310-SM1-900
CB3	F20A	MT	2000	198901	199309	HN-22A50	44305-SM4-954	HNIP-M11	44310-SM4-310	HNID-507	44310-SM1-900
CB4 4WS	F20A	MT	2000	198901	199309	HN-22A50	44305-SM4-953	HNIP-M11	44310-SM4-310	HNID-507	44310-SM1-900
CB4 4WS	F20A	MT	2000	198901	199309	HN-22A50	44305-SM4-954	HNIP-M11	44310-SM4-310	HNID-507	44310-SM1-900
CB4 4WS	F20A	MT	2000	198901	199309	HN-22A50	44305-SM4-950	HNIP-M11	44310-SM4-310	HNID-507	44310-SM1-900
CB4 4WS	F20A	MT	2000	198901	199309	HN-22A50	44305-SM4-952	HNIP-M11	44310-SM4-310	HNID-507	44310-SM1-900
CB3	F20A	AT	2000	198901	199309	HN-22A50	44305-SM4-J80	HNIP-516	44310-SM1-980	HNIP-516	44310-SM1-980
CB3	F20A	AT	2000	198901	199309	HN-22A50	44305-SM4-J81	HNIP-516	44310-SM1-980	HNIP-516	44310-SM1-980
CB3	F20A	AT	2000	198901	199309	HN-22A50	44305-SM4-J83	HNIP-516	44310-SM1-980	HNIP-516	44310-SM1-980
CB3	F20A	AT	2000	198901	199309	HN-22A50	44305-SM4-J84	HNIP-516	44310-SM1-980	HNIP-516	44310-SM1-980
CB4 4WS	F20A	AT	2000	198901	199309	HN-22A50	44305-SM4-J80	HNIP-516	44310-SM1-980	HNIP-516	44310-SM1-980
CB4 4WS	F20A	AT	2000	198901	199309	HN-22A50	44305-SM4-J81	HNIP-516	44310-SM1-980	HNIP-516	44310-SM1-980
CB4 4WS	F20A	AT	2000	198901	199309	HN-22A50	44305-SM4-J83	HNIP-516	44310-SM1-980	HNIP-516	44310-SM1-980
CB4 4WS	F20A	AT	2000	198901	199309	HN-22A50	44305-SM4-J84	HNIP-516	44310-SM1-980	HNIP-516	44310-SM1-980
CB4 4WS	F20A	AT	2000	198909	199309	HN-22	44305-SM4-983	HNIP-516	44310-SM1-980	HNIP-516	44310-SM1-980
CB4 4WS	F20A	AT	2000	198909	199309	HN-22	44305-SM4-984	HNIP-516	44310-SM1-980	HNIP-516	44310-SM1-980
CB6	F20A	AT	2000	199003	199403	HN-22A50	44305-SM1-980	HNIP-516	44310-SM1-980	HNIP-516	44310-SM1-980
CD4	F20B	AT	2000	199309	199709	HN-22	44010-SV4-000				
CD4	F20B	AT	2000	199309	199709	HN-22A50	44010-SV4-950				
CD4	F20B	AT	2000	199309	199709	HN-22	44010-SV4-010				
CD4	F20B	AT	2000	199309	199709	HN-22A50	44010-SV4-951				
CD4	F20B	AT	2000	199309	199709	HN-22	44010-SV4-000				
CD4	F20B	AT	2000	199309	199709	HN-22A50	44010-SV4-950				
CF4	F20B	5MT	2000	199709		HN-29A50	44010-S0A-J50				
CF4	F20B	5MT	2000	199709		HN-55A50	44010-S0A-950				
CF5 4WD	F20B	4AT	2000	199709		HN-29A50	44010-S0A-J50				
CF5 4WD	F20B	4AT	2000	199709		HN-55A50	44010-S0A-950				
CF4	F20B	4AT	2000	199709		HN-29A50	44010-S0A-J50				
CF4	F20B	4AT	2000	199709		HN-55A50	44010-S0A-950				
CG	F20B6	5MT	2000	199810	200207	HN-ACEA50	44014-S1A-E01				
CG	F20B6	4AT	2000	199810	200207	HN-ACEA50	44014-S1A-E01				
SDA	K20A7	MT/AT	2000	200301		HN-60	44305-SDC-A00	HNIP-HRVM	44310-S0A-300	HNIP-HRVM	44310-S0A-300
SDA	K20A7	MT/AT	2000	200301		HN-60	44305-SDC-A00	HNIP-HRVM	44310-S0A-300	HNIP-HRVM	44310-S0A-300
CB9	F22A	AT	2200	199104	199403	HN-22A50	44305-SM1-981				
CB7	F22A	AT	2200	199201	199402	HN-22A50	44010-SM4-954				
CD5	F22B	AT	2200	199309	199709	HN-22	44010-SV4-000	HNIP-516	44310-SM1-980	HNIP-516	44310-SM1-980
CD5	F22B	AT	2200	199309	199709	HN-22A50	44010-SV4-950	HNIP-516	44310-SM1-980	HNIP-516	44310-SM1-980
CD5	F22B	AT	2200	199309	199709	HN-22	44010-SV4-010	HNIP-516	44310-SM1-980	HNIP-516	44310-SM1-980
CD5	F22B	AT	2200	199309	199709	HN-22A50	44010-SV4-951	HNIP-516	44310-SM1-980	HNIP-516	44310-SM1-980
CD6	H22A	AT	2200	199309	199709	HN-22A50	44010-SV4-N50	HNIP-516	44310-SM1-980	HNIP-516	44310-SM1-980
CD6	H22A	AT	2200	199309	199709	HN-22	44010-SV4-010	HNIP-516	44310-SM1-980	HNIP-516	44310-SM1-980
CD6	H22A	AT	2200	199309	199709	HN-22A50	44010-SV4-951	HNIP-516	44310-SM1-980	HNIP-516	44310-SM1-980
CD5	F22B	AT	2200	199309	199709	HN-22	44010-SV4-000	HNIP-516	44310-SM1-980	HNIP-516	44310-SM1-980
CD5	F22B	AT	2200	199309	199709	HN-22A50	44010-SV4-950	HNIP-516	44310-SM1-980	HNIP-516	44310-SM1-980
CD6	H22A	AT	2200	199309	199709	HN-22	44010-SV4-000	HNIP-516	44310-SM1-980	HNIP-516	44310-SM1-980
CD6	H22A	AT	2200	199309	199709	HN-22A50	44010-SV4-950	HNIP-516	44310-SM1-980	HNIP-516	44310-SM1-980
CD6	H22A	MT	2200	199309	199709	HN-22	44010-SV4-000	HNIP-M11	44310-SM4-310	HNID-507	44310-SM1-900
CD6	H22A	MT	2200	199309	199709	HN-22A50	44010-SV4-950	HNIP-M11	44310-SM4-310	HNID-507	44310-SM1-900
CD7	F22B	AT	2200	199403	199411	HN-22	44010-SV1-000	HNIP-516	44310-SM1-980	HNIP-516	44310-SM1-980
CD7	F22B	AT	2200	199403	199411	HN-22A50	44010-SV1-950	HNIP-516	44310-SM1-980	HNIP-516	44310-SM1-980
CD8	H22A	AT	2200	199403	199411	HN-22	44010-SV1-000	HNIP-516	44310-SM1-980	HNIP-516	44310-SM1-980
CD8	H22A	AT	2200	199403	199411	HN-22A50	44010-SV1-950	HNIP-516	44310-SM1-980	HNIP-516	44310-SM1-980
CE1	F22B	AT	2200	199403	199411	HN-22	44010-SV1-000	HNIP-516	44310-SM1-980	HNIP-516	44310-SM1-980
CE1	F22B	AT	2200	199403	199411	HN-22A50	44010-SV1-950	HNIP-516	44310-SM1-980	HNIP-516	44310-SM1-980
CF6	F23A	4AT	2300	199710	200212	HN-55A50	44010-S0A-950	HNIP-516	44310-SM1-980	HNIP-516	44310-SM1-980
CF7 4WD	F23A	4AT	2300	199710	200212	HN-55A50	44010-S0A-950	HNIP-516	44310-SM1-980	HNIP-516	44310-SM1-980
SDA	K24A4	MT/AT	2400	200301		HN-60	44305-SDC-A00	HNIP-HRVM	44310-S0A-300	HNIP-HRVM	44310-S0A-300

HONDA

MODEL	ENGINE	AT/MT	CC	YEAR	YEAR	OUTER	O.E No.R	INNER R	O.E No.IR	INNER L	O.E No.IL
SDA	K24A4	MT/AT	2400	200301		HN-60	44305-SDC-A00	HNIP-HRVM	44310-S0A-300	HNIP-HRVM	44310-S0A-300
CL	J30A4	AT	3000	200301		HN-60	44305-SDC-A00	HNIR-ACL	44310-S9A-900	HNIL-ACL	44310-S3X900
CL	K20A	MT/AT	2000	200301		HN-CE	44014-SDC-A50	HNIP-HRVM	44310-S0A-300	HNIP-HRVM	44310-S0A-300
CL	K24A	MT/AT	2400	200301		HN-CE	44014-SDC-A50	HNIP-HRVM	44310-S0A-300	HNIP-HRVM	44310-S0A-300
CL	J30A	MT/AT	3000	200301		HN-CE	44014-SDC-A50	HNIR-ACL	44310-S9A-900	HNIL-ACL	44310-S3X900
CM	K20A	MT/AT	2000	200301		HN-CE	44014-SDC-A50	HNIP-HRVM	44310-S0A-300	HNIP-HRVM	44310-S0A-300
CM	K24A	MT/AT	2400	200301		HN-CE	44014-SDC-A50	HNIP-HRVM	44310-S0A-300	HNIP-HRVM	44310-S0A-300
CM	J30A	MT/AT	3000	200301		HN-CE	44014-SDC-A50	HNIR-ACL	44310-S9A-900	HNIL-ACL	44310-S3X900
ACTY TRUCK											
HA7 4WD	E07Z	5MT	660	199905			44305-S3B-951				
HA7 4WD	E07Z	5MT	660	199905			44305-S3B-003				
HA7 4WD	E07Z	5MT	660	199905			44305-S3B-N51				
HA7 4WD	E07Z	5MT	660	199905			44305-S3B-N01				
ACTY											
HA2 4WD	E05A		550	198805	199002	HN-42	44305-SJ7-003				
HH2 4WD	E05A		550	198805	199002	HN-42	44305-SJ7-003				
TC 4WD	EH		550	198303	198805		44305-SC2-003				
VH 4WD	EH		550	198206	198805		44305-SC2-003				
HA4 4WD	E07A		660	199002	199907	HN-42	44010-SJ7-003				
HA4 4WD	E07A		660	199002	199907	HN-42	44010-SJ7-013				
HH4 4WD	E07A		660	199002	199906	HN-42	44305-SJ7-003				
HH4 4WD	E07A		660	199002	199906	HN-42	44010-SJ7-003				
HH4 4WD	E07A		660	199002	199906	HN-42	44010-SJ7-013				
ASCOT											
CB1	F18A	AT	1800	198909	199204	HN-22	44305-SM4-983	HNIP-516	44310-SM1-980		
CB1	F18A	AT	1800	198909	199204	HN-22A50	44305-SM4-J83			HNID-507	44310-SM1-900
CB1	F18A	MT	1800	198909	199204	HN-22	44305-SM4-040			HNID-507	44310-SM1-900
CB1	F18A	MT	1800	198909	199204	HN-22A50	44305-SM4-954				
CB2 4WD	F18A	AT	1800	198909	199107	HN-22	44305-SM4-983	HNIP-516	44310-SM1-980		
CB2 4WD	F18A	AT	1800	198909	199107	HN-22A50	44305-SM4-J83			HNID-507	44310-SM1-900
CB2 4WD	F18A	MT	1800	198909	199107	HN-22	44305-SM4-040			HNID-507	44310-SM1-900
CB2 4WD	F18A	MT	1800	198909	199107	HN-22A50	44305-SM4-954				
CB1	F18A	AT	1800	199204	199310	HN-22	44010-SM4-A01				
CB1	F18A	AT	1800	199204	199310		44010-SM4-A10				
CB1	F18A	MT	1800	199204	199310		44010-SM4-A01				
CB1	F18A	MT	1800	199204	199310		44010-SM4-A10				
CB3	F20A	AT	2000	198909	199107	HN-22A50	44305-SM4-J83				
CB3	F20A	AT	2000	198909	199204	HN-22A50	44305-SM4-N51				
CB3	F20A	MT	2000	198909	199204	HN-22	44305-SM4-040			HNID-507	44310-SM1-900
CB3	F20A	MT	2000	198909	199204	HN-22A50	44305-SM4-954				
CB4 4WS	F20A	AT	2000	198909	199204	HN-22	44305-SM4-983	HNIP-516	44310-SM1-980		
CB4 4WS	F20A	AT	2000	198909	199107	HN-22A50	44305-SM4-J83				
CB4 4WS	F20A	AT	2000	198909	199204	HN-22A50	44305-SM4-N51				
CB4 4WS	F20A	MT	2000	198909	199107	HN-22	44305-SM4-040			HNID-507	44310-SM1-900
CB4 4WS	F20A	MT	2000	198909	199107	HN-22A50	44305-SM4-954				
CB3	F20A	AT	2000	198909	199204	HN-22	44305-SM4-983				
CB3	F20A	AT	2000	199203	199402		44010-SM4-040			HNID-507	44310-SM1-900
CB3	F20A	AT	2000	199203	199402	HN-22A50	44010-SM4-954				
CB3	F20A	MT	2000	199203	199402		44010-SM4-040			HNID-507	44310-SM1-900
CB4 4WS	F20A	AT	2000	199203	199402		44010-SM4-040			HNID-507	44310-SM1-900
CB4 4WS	F20A	AT	2000	199203	199402	HN-22A50	44010-SM4-954				
CB3	F20A	AT	2000	199204	199310	HN-22	44010-SM4-A01				
CB3	F20A	AT	2000	199204	199310		44010-SM4-A10				
CB3	F20A	AT	2000	199204	199310	HN-22A50	44010-SM4-A80				
CB3	F20A	MT	2000	199204	199310		44010-SM4-A01				
CB3	F20A	MT	2000	199204	199310		44010-SM4-A10				
CB4 4WS	F20A	AT	2000	199204	199310	HN-22	44010-SM4-A01				
CB4 4WS	F20A	AT	2000	199204	199310	HN-22A50	44010-SM4-A80				
CE4	G20A	MT/AT	2000	199310	199709	HN-22	44010-SW3-000				
CE4	G20A	MT/AT	2000	199310	199709	HN-22A50	44010-SW3-950				
CC4	H23A	AT	2300	199203	199402		44010-SM4-040			HNID-507	44310-SM1-900
CC4	H23A	AT	2300	199203	199402	HN-22A50	44010-SM4-N52				
CC5 4WS	H23A	AT	2300	199203	199402		44010-SM4-040			HNID-507	44310-SM1-900
CC5 4WS	H23A	AT	2300	199203	199402	HN-22A50	44010-SM4-N52				
CE5	G25A	AT	2500	199310	199709	HN-22	44010-SW3-000				
CE5	G25A	AT	2500	199310	199709	HN-22A50	44010-SW3-950				
AVANCIER											
TA1	F23A	4AT	2300	199909			44305-S2X-950				
TA2 4WD	F23A	4AT	2300	199909			44305-S4X-950				
TA3	J30A	5MT	3000	199909			44305-S3X-950				
TA4 4WD	J30A	5MT	3000	200002			44305-S4X-950				
BALLADE											
AK AJ	EV	MT/AT	1300	198307	198709	HN-12	44305-SB2-010				
AF AK	EW	MT/AT	1500	198307	198709	HN-13	44305-SB2-961				
EK15	D15B	MT	1500	199709		HN-35	44010-S04-010			HNID-U10	44310-S10-A10
EK15	D15B	AT	1500	199709		HN-35	44010-S04-010			HNID-U10	44310-S10-A10
AS	ZC	MT/AT	1600	198411	198709	HN-20	44305-SB2-982				
EK16	D16B	MT	1600	199709		HN-35	44010-S04-010			HNID-U10	44310-S10-A10
EK16	D16B	AT	1600	199709		HN-35	44010-S04-010			HNID-U10	44310-S10-A10
CAPA											

HONDA

MODEL	ENGINE	AT/MT	CC	YEAR	YEAR	OUTER	O.E No.R	INNER R	O.E No.IR	INNER L	O.E No.IL
GA4	D15B	HMM	1500	199804	200201		44010-S2G-950				
CITY											
GA1	D12A	AT	1200	198610	199406	HN-12	44305-SF4-900				
GA1	D12A	MT	1200	198610	199406	HN-12	44305-SF4-010				
GA2	D13C	MT/AT	1300	198808	199406	HN-13	44305-SF4-J40				
GA2	D13C	MT/AT	1300	198808	199406	HN-13	44305-SF4-J21				
GD6	L15A1	MT/AT	1500	200301		HN-59	44305-SEL-T00				
GD6	L15A1	MT/AT	1500	200301		HN-59	44014-SEL-T00				
GD8	L15A2	MT/AT	1500	200301		HN-59	44014-SEL-T00				
GD8	L15A2	MT/AT	1500	200301		HN-59	44305-SEL-T00				
CITY-PRO											
VF100	ER	MT/AT	1200	198301	198701	HN-25	44305-SA7-000				
CIVIC FERIO											
EG7	D13B	MT/AT	1300	199101	199209	HN-24	44010-SR3-020				
EG7	D13B	MT/AT	1300	199209	199309	HN-24	44010-SR3-030				
EG7	D13B	MT/AT	1300	199309	199509	HN-24	44010-SR3-040				
EG8	D15B	MT/AT	1300	199309	199509	HN-24	44010-SR3-040				
EK2	D13B	MT/AT	1300	199509	200009	HN-35	44010-S04-010				
EK2	D13B	MT/AT	1300	199509	200009	HN-21	44010-S04-901				
EG8	D15B	MT/AT	1500	199101	199209	HN-24	44010-SR3-020				
EG8	D15B	MT/AT	1500	199101	199209	HN-24	44010-SR3-902				
EG8	D15B	MT/AT	1500	199101	199209	HN-24A50	44010-SR3-952				
EG8	D15B	MT/AT	1500	199209	199309	HN-24	44010-SR3-030				
EG8	D15B	MT/AT	1500	199209	199309	HN-24	44010-SR3-903				
EG8	D15B	MT/AT	1500	199209	199309	HN-24A50	44010-SR3-953				
EG8	D15B	MT/AT	1500	199309	199509	HN-24	44010-ST7-900				
EG8	D15B	MT/AT	1500	199309	199509	HN-24A50	44010-ST7-950				
EG8	D15B	MT/AT	1500	199309	199509	HN-24	44010-SR3-040				
EK3	D15B	MT/HMM	1500	199509	200009	HN-35	44010-S04-010				
EK3	D15B	MT/HMM	1500	199509	200009	HN-21	44010-S04-901				
EK3	D15B	MT/HMM	1500	199509	200009	HN-38	44010-S04-951				
EK3	D15B	MT/HMM	1500	199509	200009	HN-35A50	44010-S04-961				
ES1	D15B	5MT	1500	200009		HN-54A50	44305-S5A-950				
ES1	D15B	AT/CVT	1500	200009		HN-54A50	44305-S5A-N50				
ES2 4WD	D15B	5MT	1500	200009		HN-55A50	44305-S5C-950	HNIP-HRVM	44310-S0A-300	HNIU-HRV	44310-S0A-900
ES2 4WD	D15B	5MT	1500	200009		HN-55A50	44305-S5C-N50	HNIP-HRVM	44310-S0A-300	HNIU-HRV	44310-S0A-900
ES2 4WD	D15B	5MT	1500	200009		HN-55A50	44305-S5C-N51	HNIP-HRVM	44310-S0A-300	HNIU-HRV	44310-S0A-900
EG9	B16A	MT/AT	1600	199101	199209	HN-21	44010-SR3-J03				
EG9	B16A	MT/AT	1600	199101	199209	HN-21A50	44010-SR3-J53				
EH1 4WD	ZC	MT/AT	1600	199101	199209	HN-21	44010-SR7-020				
EG9	B16A	MT/AT	1600	199209	199309	HN-21	44010-SR3-J05				
EG9	B16A	MT/AT	1600	199209	199309	HN-21A50	44010-SR3-J55				
EH1 4WD	ZC	MT/AT	1600	199209	199309	HN-21	44010-SR7-030				
EH1 4WD	ZC	MT/AT	1600	199209	199309	HN-21A50	44010-SR7-953				
EG9	B16A	MT/AT	1600	199309	199509	HN-21	44010-ST7-N00				
EG9	B16A	MT/AT	1600	199309	199509	HN-21A50	44010-ST7-N50				
EJ3	ZC	MT/AT	1600	199309	199509	HN-24	44010-ST7-900				
EJ3	ZC	MT/AT	1600	199309	199509	HN-24A50	44010-ST7-950				
EH1 4WD	ZC	MT/AT	1600	199309	199509	HN-21	44010-ST7-040				
EH1 4WD	ZC	MT/AT	1600	199309	199509	HN-21A50	44010-SR7-954				
EK4	B16A	MT/AT	1600	199509	200009	HN-24	44010-S04-J01				
EK4	B16A	MT/AT	1600	199509	200009	HN-24A50	44010-S04-J51				
EK5 4WD	D16A	MT/AT	1600	199509	200009	HN-24	44010-S10-951	HNIP-HRVA	44310-S10-320	HNIU-HRV	44310-S10-902
EK5 4WD	D16A	MT/AT	1600	199509	200009	HN-24A50	44010-S10-951	HNIP-HRVA	44310-S10-320	HNIU-HRV	44310-S10-902
ES3	D17A	HMM	1700	200009		HN-55A50	44305-S5A-J50	HNIP-HRVA	44310-S04-N00	HNIU-HRV	44310-S0A-900
ES3	D17A	HMM	1700	200009		HN-55A50	44305-S5A-J60	HNIP-HRVA	44310-S04-N00	HNIU-HRV	44310-S0A-900
ES3	D17A	HMM	1700	200009		HN-55A50	44305-S5A-J61	HNIP-HRVA	44310-S04-N00	HNIU-HRV	44310-S0A-900
CIVIC PRO											
VJ	EV	MT	1300	198309	198710	HN-12	44305-SB2-010	HNIU-521	44310-SB2-300	HNIU-521	44310-SB2-300
EY2	D13B	5MT	1300	198710	198808	HN-12	44010-SH3-010	HNIU-521	44310-SB2-300	HNIU-521	44310-SB2-300
EY2	D13B	5MT	1300	198808	199602	HN-12	44010-SH3-020	HNIU-521	44310-SB2-300	HNIU-521	44310-SB2-300
EY4	D15B	MT/AT	1500	199211	199602	HN-19	44010-SH3-962				
EY5 4WD	ZC	MT/AT	1600	199211	199602	HN-20A50	44010-SH9-J72				
EY5 4WD	ZC	5MT	1600	199211	199602	HN-20A50	44010-SH9-J02				
EY5 4WD	ZC	4AT	1600	199211	199602	HN-20A50	44010-SH9-J02				
EY5 4WD	ZC	AT	1600	199211	199407	HN-20A50	44010-SH9-J02				
EY5 4WD	ZC	AT	1600	199211	199407	HN-20A50	44010-SH9-J72				
EY5 4WD	ZC	MT	1600	199211	199407	HN-20A50	44010-SH9-J02				
EY5 4WD	ZC	MT	1600	199211	199407	HN-20A50	44010-SH9-J72				
CIVIC SHUTTLE											
AJ	EV	MT	1300	198309	198509	HN-12	44305-SB2-010	HNIU-521	44310-SB2-300	HNIU-521	44310-SB2-300
EF1	D13B	MT/AT	1300	198909	199211	HN-12	44305-SH3-010	HNIU-521	44310-SB2-300		
EF1	D13B	MT/AT	1300	198909	199211	HN-12	44010-SH3-020	HNIU-521	44310-SB2-300		
AK	EW	MT/AT	1500	198309	198710	HN-13	44305-SB2-961				
AR 4WD	EW	MT	1500	198411	198710	HN-31	44305-SD9-013				
EF2	D15B	MT/AT	1500	198709	199604	HN-19	44305-SH3-961	HNIP-509	44310-SH3-960	HNID-508	44310-SH3-970
EF4 4WD	D15B	MT	1500	198709	198909	HN-31	44305-SH9-003				
EF4 4WD	D15B	MT	1500	198709	198909	HN-31A50	44010-SH9-970				
EF4 4WD	D15B	5MT	1500	198710	198909	HN-31	44010-SH9-000				
EF4 4WD	D15B	5MT	1500	198710	198909	HN-31	44010-SH9-000				
EF2	D15B	MT/AT	1500	198710	199602	HN-19	44010-SH3-962	HNIP-509	44310-SH3-960	HNID-508	44310-SH3-970

HONDA

MODEL	ENGINE	AT/MT	CC	YEAR	YEAR	OUTER	O.E No.R	INNER R	O.E No.IR	INNER L	O.E No.IL
EF3	ZC	MT/AT	1600	198709	198808	HN-20	44305-SH3-J00				
EF5 4WD	ZC	MT	1600	198710	198807	HN-31	44305-SH9-003				
EF5 4WD	ZC	MT	1600	198710	198807	HN-31A50	44010-SH9-970				
EF3	ZC	MT/AT	1600	198710	199009	HN-20	44010-SH3-J01				
EF3	ZC	MT/AT	1600	198710	199009	HN-19	44010-SJ4-J01	HNIP-509	44310-SH3-960	HNID-508	44310-SH3-970
EF3	ZC	MT/AT	1600	198710	199009	HN-20	44010-SH3-J01				
EF5 4WD	ZC	MT/AT	1600	198710	198909	HN-31	44010-SH9-000				
EF5 4WD	ZC	MT/AT	1600	198710	198909	HN-31	44010-SH9-000				
EF5 4WD	ZC	MT/AT	1600	198710	198909	HN-31A50	44010-SH9-970				
EF5 4WD	ZC	MT/AT	1600	198710	198909	HN-31A50	44010-SH9-970				
EF5 4WD	ZC	AT	1600	198807	199211	HN-20	44305-SH9-J03				
EF5 4WD	ZC	AT	1600	198807	199211	HN-20A50	44010-SH9-J71				
EF5 4WD	ZC	MT	1600	198807	199211	HN-20	44305-SH9-J03				
EF5 4WD	ZC	MT	1600	198807	199211	HN-20A50	44010-SH9-J71				
EF3	ZC	AT	1600	198808	198909	HN-20	44305-SJ4-J02				
EF3	ZC	MT	1600	198808	198909	HN-20	44305-SJ4-J02				
EF5 4WD	ZC	5MT	1600	198909	199211	HN-20A50	44010-SH9-J00				
EF5 4WD	ZC	5MT	1600	198909	199211	HN-20A50	44010-SH9-J01				
EF5 4WD	ZC	4AT	1600	198909	199211	HN-20A50	44010-SH9-J00				
EF5 4WD	ZC	4AT	1600	198909	199211	HN-20A50	44010-SH9-J01				
EF5 4WD	ZC	5MT	1600	198909	199211	HN-20A50	44010-SH9-J70				
EF5 4WD	ZC	5MT	1600	198909	199211	HN-20A50	44010-SH9-J71				
EF5 4WD	ZC	4AT	1600	198909	199211	HN-20A50	44010-SH9-J02				
EF5 4WD	ZC	4AT	1600	198909	199211	HN-20A50	44010-SH9-J02				
EF5 4WD	ZC	MT/AT	1600	198909	199211	HN-20A50	44010-SH9-J70				
EF5 4WD	ZC	MT/AT	1600	198909	199211	HN-20A50	44010-SH9-J71				
EF3	ZC	MT/AT	1600	199009	199211	HN-19	44010-SJ4-J02	HNIP-509	44310-SH3-960	HNID-508	44310-SH3-970
EF5 4WD	ZC	5MT	1600	199211	199602	HN-20A50	44010-SH9-J72				
EF5 4WD	ZC	5MT	1600	199211	199602	HN-20A50	44010-SH9-J02				
EF5 4WD	ZC	4AT	1600	199211	199602	HN-20A50	44010-SH9-J72				
EF5 4WD	ZC	4AT	1600	199211	199602	HN-20A50	44010-SH9-J02				
EF5 4WD	ZC	AT	1600	199211	199407	HN-20A50	44010-SH9-J02				
EF5 4WD	ZC	AT	1600	199211	199407	HN-20A50	44010-SH9-J72				
EF5 4WD	ZC	MT	1600	199211	199407	HN-20A50	44010-SH9-J02				
EF5 4WD	ZC	MT	1600	199211	199407	HN-20A50	44010-SH9-J72				
EF5	ES	4AT	2200	199511		HN-35A50	44010-SX0-950	HNIP-M11	44310-SM4-310	HNIR-507R	44310-SL5-N00
EF5	LS	4AT	2300	199711		HN-35A50	44010-SX1-950	HNIP-M11	44310-SM4-310		

CIVIC

SB1 SG	EB EJ	MT/AT	1300	197701	197901	HN-04	44305-634-003				
SH SK	EB EJ	MT/AT	1300	197701	198901	HN-04	44305-634-013				
SP SG	EB EJ	MT/AT	1300	197701	197901	HN-04	44305-634-023				
SL SS	EB EJ	MT/AT	1300	197701	197901	HN-04	44305-634-033				
SL SS	EB EJ	MT/AT	1300	197701	197901	HN-04	44305-634-003				
SK SL	FJ	MT/AT	1300	197801	198001	HN-04	44305-634-659				
SR ST	EN	MT/AT	1300	197901	198101	HN-04	44305-SA0-003				
SL SS	EJ	MT/AT	1300	198001	198301	HN-04	44305-SA0-003				
VE SL	EJ	MT/AT	1300	198001	198301	HN-09	44305-SA2-030				
SL SS	FJ	MT/AT	1300	198001	198401	HN-09	44305-SA2-010				
SR ST	FN	MT/AT	1300	198101	198301	HN-09	44305-SA2-010				
AG AJ	EV2	MT/AT	1300	198301	198701	HN-12	44305-SB2-000	HNIU-521	44310-SB2-300	HNIU-521	44310-SB2-300
AH AK	EW	MT/AT	1300	198301	198701	HN-13	44305-SB2-750				
VJ	EV	MT/AT	1300	198401	198701	HN-12	44305-SB2-010	HNIU-521	44310-SB2-300	HNIU-521	44310-SB2-300
AG AJ	EV	MT/AT	1300	198509	198709	HN-12	44305-SB2-010	HNIU-521	44310-SB2-300	HNIU-521	44310-SB2-300
EF1	D13B	MT/AT	1300	198701	199201	HN-12	44305-SH3-000	HNIU-521	44310-SB2-300		
EF1	D13B	MT/AT	1300	198701	199201	HN-12	44305-SH3-010	HNIU-521	44310-SB2-300		
EF1	D13B	MT/AT	1300	198701	199201	HN-12	44305-SH3-A21	HNIU-521	44310-SB2-300		
EF EY	D13B	MT/AT	1300	198801	199201	HN-11	44305-SH3-A20				
EG3	D13B	MT/AT	1300	199109	199509	HN-24	44010-SR3-040	HNIP-509	44310-SH3-960	HNID-508	44310-SH3-970
EG7	D13B	MT/AT	1300	199109	199509	HN-24	44010-SR3-040	HNIP-509	44310-SH3-960	HNID-508	44310-SH3-970
EG3	D13B	MT/AT	1300	199109	199209	HN-24	44010-SR3-020	HNIP-509	44310-SH3-960	HNID-508	44310-SH3-970
EG3	D13B	MT/AT	1300	199209	199309	HN-24	44010-SR3-030	HNIP-509	44310-SH3-960	HNID-508	44310-SH3-970
EK2	D13B	MT/AT	1300	199509	199609	HN-35	44010-S04-010				
EK2	D13B	MT/AT	1300	199509	199609	HN-21	44010-S04-901				
	L13A	MT	1400	200006	200606	HN-55A50	44014-S5T-A50			HNIL-C7M	44310-S5A-J00
	L13A	AT	1400	200006	200606	HN-55A50	44014-S5T-A50			HNIL-C7A	44310-S5A-J50
SB2 2H	EC	MT/AT	1500	197501	197701	HN-04	44305-634-659				
SB SG	ED	MT/AT	1500	197701	197901	HN-04	44305-634-003				
SH SK	ED	MT/AT	1500	197701	197901	HN-04	44305-634-013				
SP SG	ED	MT/AT	1500	197701	197901	HN-04	44305-634-023				
SL SS	ED	MT/AT	1500	197701	197901	HN-04	44305-634-033				
SL SS	ED	MT/AT	1500	197701	197901	HN-04	44305-634-033				
SR ST	EM	MT/AT	1500	198001	198301	HN-04	44305-SA0-003				
WD SR V	EM	MT/AT	1500	198001	198301	HN-09	44305-SA2-010				
AH AK	EW	MT/AT	1500	198401	198701	HN-13	44305-SB2-750				
AH AK	EW	MT/AT	1500	198401	198701	HN-13	44305-SB2-751				
AH AK	EW	MT/AT	1500	198401	198701	HN-13	44305-SA2-960				
AH AK	EW	MT/AT	1500	198401	198701	HN-13	44305-SA2-961				
EF2	D15B	MT/AT	1500	198701	199201	HN-19	44305-SH3-960				
EF2	D15B	MT/AT	1500	198701	199201	HN-19	44305-SH3-961				
EF2	D15B	MT/AT	1500	198701	199201	HN-19	44305-SH3-A00				
EF2	D15B	MT/AT	1500	198701	199201	HN-19	44305-SH3-A01				

HONDA

MODEL	ENGINE	AT/MT	CC	YEAR	YEAR	OUTER	O.E No.R	INNER R	O.E No.IR	INNER L	O.E No.IL
EF6	D15B	MT/AT	1500	198701	199201	HN-19	44305-SH3-G00				
EF6	D15B	MT/AT	1500	198701	199201	HN-19	44305-SH3-G01				
EF2	D15B	MT/AT	1500	198701	199201	HN-19	44305-SH3-970				
EF2	D15B	MT/AT	1500	198701	199201	HN-19	44305-SH3-971				
EF2	D15B	MT/AT	1500	198701	199201	HN-19	44305-SH3-980				
EF2	D15B	MT/AT	1500	198701	199201	HN-19	44305-SH3-981				
EF2	D15B	MT/AT	1500	198701	199201	HN-19	44305-SH3-G10				
EF2	D15B	MT/AT	1500	198701	199201	HN-19	44305-SH3-G11				
EF4 4WD	D15B	MT/AT	1500	198701	199201	HN-31	44305-SH9-000				
EF4 4WD	D15B	MT/AT	1500	198701	199201	HN-31	44305-SH9-003				
EF4 4WD	D15B	MT	1500	198709	198909	HN-31	44305-SH9-003				
EG4	D15B	MT/AT	1500	199109	199509	HN-24	44010-SR3-040	HNIP-509	44310-SH3-960	HNID-508	44310-SH3-970
EG4	D15B	MT/AT	1500	199109	199309	HN-24	44010-SR3-903	HNIP-509	44310-SH3-960	HNID-508	44310-SH3-970
EG4	D15B	MT/AT	1500	199109	199309	HN-24A50	44010-SR3-953	HNIP-509	44310-SH3-960	HNID-508	44310-SH3-970
EG8	D15B	MT/AT	1500	199109	199509	HN-24	44010-SR3-040	HNIP-509	44310-SH3-960	HNID-508	44310-SH3-970
EG8	D15B	MT/AT	1500	199109	199309	HN-24	44010-SR3-903	HNIP-509	44310-SH3-960	HNID-508	44310-SH3-970
EG8	D15B	MT/AT	1500	199109	199309	HN-24A50	44010-SR3-953	HNIP-509	44310-SH3-960	HNID-508	44310-SH3-970
EG4	D15B	MT/AT	1500	199109	199209	HN-24	44010-SR3-020	HNIP-509	44310-SH3-960	HNID-508	44310-SH3-970
EG4	D15B	MT/AT	1500	199109	199209	HN-24	44010-SR3-902	HNIP-509	44310-SH3-960	HNID-508	44310-SH3-970
EG4	D15B	MT/AT	1500	199209	199309	HN-24	44010-SR3-030	HNIP-509	44310-SH3-960	HNID-508	44310-SH3-970
EG4	D15B	MT/AT	1500	199309	199509	HN-24	44010-ST7-900	HNIP-509	44310-SH3-960	HNID-508	44310-SH3-970
EG4	D15B	MT/AT	1500	199309	199509	HN-24A50	44010-ST7-950	HNIP-509	44310-SH3-960	HNID-508	44310-SH3-970
EG8	D15B	MT/AT	1500	199309	199509	HN-24	44010-ST7-900	HNIP-509	44310-SH3-960	HNID-508	44310-SH3-970
EG8	D15B	MT/AT	1500	199309	199509	HN-24A50	44010-ST7-950	HNIP-509	44310-SH3-960	HNID-508	44310-SH3-970
EK3	D15B	MT/HMM	1500	199509	199609	HN-35	44010-S04-010				
EK3	D15B	MT/HMM	1500	199509	199609	HN-21	44010-S04-901				
EK3	D15B	MT/CVT	1500	199509	199609	HN-38	44010-S04-951				
EK3	D15B	MT/HMM	1500	199509	199609	HN-35A50	44010-S04-961				
U1	D15B	AT/CVT	1500	200009		HN-54A50	44305-S5A-N50				
U2 4WD	D15B	4AT	1500	200009		HN-55A50	44305-S5C-N50	HNIP-HRVA	44310-S04-N00	HNIU-HRV	44310-S0A-900
U2 4WD	D15B	4AT	1500	200009		HN-55A50	44305-S5C-N51	HNIP-HRVA	44310-S04-N00	HNIU-HRV	44310-S0A-900
SH100	ED	MT/AT	1600	197701	197901	HN-04	44305-634-659				
AT AU A	ZC	MT/AT	1600	198401	198709	HN-20	44305-SB2-982				
AS	ZC	MT	1600	198401	198701	HN-20	44305-SH3-J10				
AT AU A	ZC	MT/AT	1600	198509	198709	HN-20	44305-SB2-982				
EF5 4WD	ZC	MT/AT	1600	198701	199201	HN-31	44305-SH9-000				
EF5 4WD	ZC	MT/AT	1600	198701	199201	HN-31	44305-SH9-003				
EF7	ZC	MT/AT	1600	198701	199201	HN-20	44305-SH3-J00				
EF7	ZC	MT/AT	1600	198701	199201	HN-20	44305-SH3-J01				
F3	ZC	MT	1600	198701	199201	HN-20	44305-SH3-G21				
F3	ZC	MT	1600	198701	199201	HN-20	44305-SH3-G23				
EF7	ZC	MT	1600	198701	199201	HN-20	44305-SH3-G21				
EF7	ZC	MT	1600	198701	199201	HN-20	44305-SH3-G23				
EF7	ZC	MT	1600	198701	199201	HN-20	44305-SH3-G25				
MA	ZC	MT/AT	1600	198701	199109	HN-19	44305-SJ4-962	HNIP-509	44310-SH3-960	HNID-508	44310-SH3-970
F3	ZC	AT	1600	198709	199109	HN-20	44305-SH3-J00				
F3	ZC	AT	1600	198709	199109	HN-20	44305-SH3-J01				
F3	ZC	MT	1600	198709	199109	HN-20	44305-SH3-J01				
F3	ZC	AT	1600	198709	199109	HN-20A50	44305-SH3-J71				
F3	ZC	MT	1600	198709	199109	HN-20A50	44305-SH3-J71				
EF5 4WD	ZC	AT	1600	198709	199109	HN-31A50	44305-SH9-971				
EF5 4WD	ZC	MT	1600	198709	199109	HN-31	44305-SH9-000				
EF5 4WD	ZC	MT	1600	198709	199109	HN-31A50	44305-SH9-971				
EF9	B16A	5MT	1600	198909	199109	HN-21	44305-SH3-N11				
EF9	B16A	5MT	1600	198909	199109	HN-21A50	44305-SH3-N71				
EG6	B16A	MT/AT	1600	199109	199309	HN-21	44010-SR3-J05				
EG6	B16A	MT/AT	1600	199109	199309	HN-21A50	44010-SR3-J55				
EG9	B16A	MT/AT	1600	199109	199309	HN-21	44010-SR3-J05				
EG9	B16A	MT/AT	1600	199109	199309	HN-21A50	44010-SR3-J55			HNIR-507R	44310-SL5-N00
EH1 4WD	ZC	MT/AT	1600	199109	199509	HN-21	44010-SR7-040			HNIR-507R	44310-SL5-N00
EH1 4WD	ZC	MT/AT	1600	199109	199509	HN-21A50	44010-SR7-954			HNIR-507R	44310-SL5-N00
EG6	B16A	MT/AT	1600	199109	199209	HN-21	44010-SR3-J03				
EG9	B16A	MT/AT	1600	199201	199509	HN-24	44010-SR3-020	HNIP-509	44310-SH3-960	HNID-508	44310-SH3-970
EG5	ZC	MT/AT	1600	199205	199509		44010-SR3-A54				
EG5	ZC	MT/AT	1600	199205	199509	HN-21	44010-SR3-A04				
EJ1	ZC	MT/AT	1600	199302	199601	HN-24	44010-SR3-030	HNIP-509	44310-SH3-960	HNID-508	44310-SH3-970
EG6	B16A	MT/AT	1600	199309	199509	HN-21	44010-ST7-N00				
EG9	B16A	MT/AT	1600	199309	199509	HN-21	44010-ST7-N00				
EG9	B16A	MT/AT	1600	199309	199509	HN-21A50	44010-ST7-N50			HNIR-507R	44310-SL5-N00
EJ3	ZC	AT	1600	199309	199509	HN-24	44010-ST7-900	HNIP-509	44310-SH3-960	HNID-508	44310-SH3-970
EJ3	ZC	AT	1600	199309	199509	HN-24A50	44010-ST7-950	HNIP-509	44310-SH3-960	HNID-508	44310-SH3-970
EG6	B16A	MT/AT	1600	199309	199509	HN-21A50	44010-ST7-N50				
EK5 4WD	D16A	MT/AT	1600	199509	200009	HN-21	44010-S07-000	HNIP-5015	44310-S04-300	HNID-5014	44310-S2G-J00
EK4	B16A	MT/AT	1600	199509	200009	HN-24	44010-S04-J01	HNIP-5015	44310-S04-300	HNID-5014	44310-S2G-J00
EK4	B16A	MT/AT	1600	199509	200009	HN-24A50	44010-S04-J51	HNIP-5015	44310-S04-300	HNID-5014	44310-S2G-J00
EK5 4WD	D16A	MT/AT	1600	199509	200009	HN-21A50	44010-S07-950	HNIP-5015	44310-S04-300	HNID-5014	44310-S2G-J00
EJ7	D16A	AT	1600	199601		HN-24A50	44010-S01-961	HNIP-5015	44310-S04-300	HNID-5014	44310-S2G-J00
F3	ZC	MT	1600	198701	199201	HN-20	44305-SH3-G25				
EU3	D17A	CVT	1700	200009		HN-55A50	44305-S5A-J60	HNIP-HRVA	44310-S04-N00	HNIU-HRV	44310-S0A-900
EU3	D17A	CVT	1700	200009		HN-55A50	44305-S5A-J61	HNIP-HRVA	44310-S04-N00	HNIU-HRV	44310-S0A-900
EU4 4WD	D17A	4AT	1700	200009		HN-55A50	44305-S5C-N50	HNIP-HRVA	44310-S04-N00	HNIU-HRV	44310-S0A-900
EU4 4WD	D17A	4AT	1700	200009		HN-55A50	44305-S5C-N51	HNIP-HRVA	44310-S04-N00	HNIU-HRV	44310-S0A-900

HONDA

MODEL	ENGINE	AT/MT	CC	YEAR	YEAR	OUTER	O.E No.R	INNER R	O.E No.IR	INNER L	O.E No.IL
-	D17	MT/AT	1700	200001	200212	HN-58A50	44014-S5D-A51				
-	KA20	MT/AT	2000	200301	200512	HN-55A50	44014-SDZ-T00	HNIP-HRVM	44310-S0A-300	HNIU-HRV	44310-S0A-900
EU	D14A	MT	1400	200101	200601	HN-CVA50	44014-S5A-951	HNIL-JZ	44310-S5A-300		44017-S5A-000
EU	D16A	MT	1600	200101	200601	HN-CVA50	44014-S5A-951	HNIL-JZ	44310-S5A-300	HNIL-C7M	44310-S5A-J00
EU	D14A	AT	1400	200101	200601	HN-CVA50	44014-S5A-951				
EU	D16A	AT	1600	200101	200601	HN-CVA50	44014-S5A-951				
FD	R16A	AT	1600	200601			44014-SNL-T00		44017-SEL-T00	HNIL-JZ	44310-S5A-300
FD	R18A	AT	1800	200601			44014-SNL-T00		44017-SEL-T00	HNIL-JZ	44310-S5A-300
CONCERTO											
MA1	D15B	MT/AT	1500	198805	199210	HN-19	44305-SH3-971				
MA2	ZC	MT/AT	1600	198805	199210	HN-19	44305-SJ4-962				
MA2	ZC PF1	AT	1600	198805	199210	HN-20	44305-SJ4-J02				
MA2	ZC PF1	MT	1600	198805	199210	HN-20	44305-SJ4-J02				
MA2	ZC	MT/AT	1600	198805	199210		44305-SH3-J72				
MA3 4WD	ZC	AT	1600	198805	198910	HN-31	44305-SH9-003				
MA3 4WD	ZC	AT	1600	198805	198910	HN-31A50	44305-SH9-971				
MA3 4WD	ZC	MT	1600	198805	198910	HN-31	44305-SH9-003				
MA3 4WD	ZC	MT	1600	198805	198910	HN-31A50	44305-SH9-971				
MA3 4WD	ZC	AT	1600	198910	199210	HN-20	44305-SH9-J01				
MA3 4WD	ZC	AT	1600	198910	199210	HN-20A50	44305-SH9-J71				
MA3 4WD	ZC	MT	1600	198910	199210	HN-20	44305-SH9-J01				
MA3 4WD	ZC	MT	1600	198910	199210	HN-20A50	44305-SH9-J71				
CR-V											
RD1 4WD	B20B	MT/AT	2000	199709	200109	HN-CRVRA50	42330-S0E-306	HNIU-CRV	42320-S0E-300	HNIU-CRV	42320-S0E-300
RD1 4WD	B20B	4AT	2000	199510	200109	HN-24A50	44014-S04-J50	HNIP-HRVA	44310-S10-320	HNIU-HRV	44310-S10-902
RD1 4WD	B20B	4AT	2000	199510	200109	HN-21	44010-S10-010	HNIP-A12	44310-S10-A00	HNID-U10	44310-S10-A10
RD1 4WD	B20B	4AT	2000	199510	200109	HN-21A50	44010-S10-951	HNIP-A12	44310-S10-A00	HNID-U10	44310-S10-A10
RD1 4WD	B20B	4AT	2000	199812	200109	HN-33	44010-S10-A60	HNIP-A12	44310-S10-A00	HNID-U10	44310-S10-A10
RD1 4WD	B20B	5MT	2000	199709	199812	HN-33	44010-S10-A60	HNIP-M11	44310-SM4-310	HNID-U10	44310-S10-A10
RD1 4WD	B20B	4AT	2000	199709	199812	HN-21A50	44010-S10-951	HNIP-A12	44310-S10-A00	HNID-U10	44310-S10-A10
RD1 4WD	B20B	5MT	2000	199812	200109	HN-29A50	44305-S10-C61	HNIP-M11	44310-SM4-310	HNID-U10	44310-S10-A10
RD1 4WD	B20B	4AT	2000	199812	200109	HN-56A50	44305-S10-J50	HNIP-A12	44310-S10-A00	HNID-U10	44310-S10-A10
RD2	B20B	4AT	2000	200005		HN-56A50	44305-S10-J50	HNIP-A12	44310-S10-A00	HNID-U10	44310-S10-A10
RD5 4WD	K20A	MT/AT	2000	200109		HN-57	44305-S9A-N00	HNID-U10	44310-S9A-305		
RD4	K20A	4AT	2000	200109		HN-57	44305-S9A-N00	HNID-U10	44310-S9A-305		
DOMANI											
MA7	D15B	MT/AT	1500	199402	199509	HN-24	44010-ST7-910				
MA7	D15B	MT/AT	1500	199509	199611	HN-35	44010-S04-010				
MB3	D15B	MT/AT	1500	199701		HN-35	44010-S04-010				
MB3	D15B	MT/AT	1500	199701		HN-35A50	44010-S04-951				
MA4	ZC	MT/AT	1600	199210	199701	HN-24	44010-SR3-903				
MA6 4WD	ZC	MT/AT	1600	199210	199701	HN-21	44010-SR7-030				
MA4	ZC	MT/AT	1600	199210	199701	HN-24A50	44010-SR3-953				
MA6 4WD	ZC	MT/AT	1600	199210	199701	HN-21A50	44010-SR7-953				
MA6 4WD	ZC	MT/AT	1600	199210	199701	HN-21A50	44010-SR7-954				
MB4	D16A	MT/AT	1600	199701		HN-35	44010-S04-010				
MB4	D16A	HMM	1600	199701		HN-35A50	44010-S04-961				
MB5 4WD	D16A	MT/AT	1600	199701		HN-21	44010-S07-000				
MB4	D16A	MT/AT	1600	199701		HN-35A50	44010-S04-951				
MB5 4WD	D16A	MT/AT	1600	199701		HN-21A50	44010-S07-950				
MB5 4WD	D16A	AT	1600	199701	200109	HN-24A50	44014-S04-J50	HNIP-HRVA	44310-S10-320	HNIU-HRV	44310-S10-902
MA5	B18B	MT/AT	1800	199210	199701	HN-21	44010-SR3-J05				
MA5	B18B	MT/AT	1800	199210	199701	HN-21A50	44010-SR3-J55				
MA5	B18B	MT/AT	1800	199210	199701	HN-21A50	44010-ST7-N50				
FIT/JAZZ											
GD5	L12A1	MT	1200	200203		HN-59	44014-SAB-N21			HNIL-JZ	44310-S5A-300
GD1	L13A	MT/AT	1300	200106		HN-47	44305-SAA-000			HNIL-JZ	44310-S5A-300
GD1	L13A1	MT/AT	1400	200203		HN-59	44014-SAB-N21			HNIL-JZ	44310-S5A-300
GD6	L15A1	MT/AT	1500	200301		HN-59	44305-SEL-T00			HNIL-JZ	44310-S5A-300
GD6	L15A1	MT/AT	1500	200301		HN-59	44014-SAA-010			HNIL-JZ	44310-S5A-300
GD8	L15A2	MT/AT	1500	200301		HN-59	44014-SEL-T00			HNIL-JZ	44310-S5A-300
GD8	L15A2	MT/AT	1500	200301		HN-59	44305-SEL-T00			HNIL-JZ	44310-S5A-300
HR-V											
GH2 4WD	D16A	5MT	1600	199809		HN-55A50	44305-S2H-950	HNIP-HRVM	44310-S0A-300	HNIU-HRV	44310-S0A-900
GH1	D16A	5MT	1600	199809		HN-55A50	44305-S2H-950	HNIP-HRVM	44310-S0A-300	HNIU-HRV	44310-S0A-900
GH1	D16A	HMM	1600	199809		HN-55A50	44305-S2H-N50	HNIP-HRVA	44310-S04-N00	HNIU-HRV	44310-S0A-900
GH1	D16A	5MT	1600	199907		HN-55A50	44305-S2H-950	HNIP-HRVM	44310-S0A-300	HNIU-HRV	44310-S0A-900
GH1	D16A	CVT	1600	199907		HN-55A50	44305-S2H-951	HNIP-HRVA	44310-S04-N00	HNIU-HRV	44310-S0A-900
GH2 4WD	D16A	5MT	1600	199907		HN-55A50	44305-S2H-950	HNIP-HRVM	44310-S0A-300	HNIU-HRV	44310-S0A-900
GH2 4WD	D16A	CVT	1600	199907		HN-55A50	44305-S2H-951	HNIP-HRVA	44310-S04-N00	HNIU-HRV	44310-S0A-900
GH3	D16A	5MT	1600	199907		HN-55A50	44305-S2H-950	HNIP-HRVM	44310-S0A-300	HNIU-HRV	44310-S0A-900
GH4 4WD	D16A	CVT	1600	199907		HN-55A50	44305-S2H-951	HNIP-HRVA	44310-S04-N00	HNIU-HRV	44310-S0A-900
INSIGHT											
ZE1	ECA	MT/CVT	1000	199911			44305-S3Y-950				
INSPIRE/SABER											
UA4	J25A	4AT	2500	199810	200104		44305-S0K-A00				
UA4	J25A	4AT	2500	199810	200104		44305-S0K-C00				
UA4	J25A	5AT	2500	200104			44305-S0K-C00				
UA5	J32A	4AT	3200	199810	200104		44305-S0K-A00				
UA5	J32A	4AT	3200	199810	200104		44305-S0K-C00				

HONDA

MODEL	ENGINE	AT/MT	CC	YEAR	YEAR	OUTER	O.E No.R	INNER R	O.E No.IR	INNER L	O.E No.IL
UA5	J32A	5AT	3200	200104			44305-S0K-C10				
INSPIRE											
CB5	G20A	MT/AT	2000	198910	199502	HN-22	44010-SL4-020				
CB5	G20A	MT/AT	2000	198910	199502	HN-22A50	44010-SL4-952				
CC3	G20A	AT	2000	199201	199502	HN-22	44010-SL5-N01				
CC3	G20A	AT	2000	199201	199502	HN-22A50	44010-SL5-N82				
UA1	G20A	AT	2000	199502	199810	HN-33	44010-SW5-000				
UA1	G20A	AT	2000	199502	199810	HN-29A50	44010-SW5-950				
CC2	G25A	AT	2500	199201	199502	HN-32	44010-SL5-010				
CC2	G25A	AT	2500	199201	199502	HN-32A50	44010-SL5-952				
UA2	G25A	AT	2500	199502	199810	HN-33	44010-SW5-000				
UA2	G25A	AT	2500	199502	199810	HN-29A50	44010-SW5-950				
UA3	G32A	AT	3200	199506	199810		44010-SZ5-J01				
UA3	G32A	AT	3200	199506	199810	HN-32A50	44010-SZ5-J51				
INTEGRA											
DA1	EW	MT/AT	1500	197901	198101	HN-20	44305-SD2-965				
DA1	EW	MT/AT	1500	197901	198101	HN-20	44305-SD2-010				
DA4	D15A	MT/AT	1500	198601	198701	HN-18	44305-SE7-750				
EK3	D15B	MT/AT	1500	199602	200102	HN-35	44010-S04-010				
EK3	D15B	MT/AT	1500	199602	200102	HN-21	44010-S04-901				
EK3	D15B	MT/AT	1500	199602	200102	HN-38	44010-S04-951				
EK3	D15B	MT/AT	1500	199602	200102	HN-38	44010-S04-961				
DA2	ZC	MT/AT	1600	197901	198101	HN-20	44305-SD2-965				
DA2	ZC	MT/AT	1600	197901	198101	HN-20	44305-SD2-010				
DA5	ZC	MT/AT	1600	198904	199008	HN-19	44305-SK8-000				
DA5	ZC PF1	MT/AT	1600	198904	199008	HN-20	44305-SK7-010				
DA5	ZC	MT/AT	1600	198904	199110	HN-20	44305-SK7-030				
DA5	ZC	MT/AT	1600	198904	199110		44305-SK7-983				
DA6	B16A	AT	1600	198904	199305	HN-21	44305-SK7-J23			HNID-507	44310-SM1-900
DA6	B16A	AT	1600	198904	199305	HN-21A50	44305-SK7-J83			HNID-507	44310-SM1-900
DA6	B16A	MT	1600	198904	199305	HN-21	44305-SK7-J14			HNID-507	44310-SM1-900
DA6	B16A	MT	1600	198904	199305	HN-21A50	44305-SK7-J74			HNID-507	44310-SM1-900
DA7	ZC	MT/AT	1600	198904	199008	HN-19	44305-SK8-000				
DA7	ZC PF1	MT/AT	1600	198904	199008	HN-20	44305-SK7-010				
DA7	ZC	MT/AT	1600	198904	199008	HN-19	44305-SK7-960				
DA7	ZC PF1	MT/AT	1600	198904	199008	HN-20	44305-SK7-020				
DA7	ZC	MT/AT	1600	198904	199110		44305-SK7-983				
DA8	B16A	AT	1600	198904	199307	HN-21	44305-SK7-J23			HNID-507	44310-SM1-900
DA8	B16A	AT	1600	198904	199307	HN-21A50	44305-SK7-J83			HNID-507	44310-SM1-900
DA8	B16A	MT	1600	198904	199307	HN-21	44305-SK7-J14			HNID-507	44310-SM1-900
DA8	B16A	MT	1600	198904	199307	HN-21A50	44305-SK7-J74			HNID-507	44310-SM1-900
DA7	ZC	MT/AT	1600	199008	199307		44305-SK8-961				
DA7	ZC PF1	MT/AT	1600	199008	199307		44305-SK8-030				
DA5	ZC	4AT	1600	199110	199305	HN-19	44305-SK7-961				
DA5	ZC	MT/AT	1600	199110	199305		44305-SK7-J90				
DA7	ZC	MT/AT	1600	199110	199307		44305-SK7-J90				
DC1	ZC	MT/AT	1600	199305	199508	HN-24	44010-ST7-900				
DC1	ZC	MT/AT	1600	199305	199508	HN-24A50	44010-ST7-950				
DB6	ZC	MT/AT	1600	199307	199508	HN-24	44010-ST7-900				
DB6	ZC	MT/AT	1600	199307	199508	HN-24A50	44010-ST7-950				
DB9 4WD	ZC	AT	1600	199307	199508	HN-24A50	44014-S04-J50	HNIP-HRVA	44310-S10-320	HNIU-HRV	44310-S10-902
DB9 4WD	ZC	MT/AT	1600	199307	199508	HN-21	44010-ST7-040			HNID-U10	44310-S9A-305
DB9 4WD	ZC	MT/AT	1600	199307	199508	HN-21A50	44010-ST7-954			HNID-U10	44310-S9A-305
DB1	B18B	AT	1800	199110	199307	HN-21	44010-SK7-J22			HNID-507	44310-SM1-900
DB1	B18B	AT	1800	199110	199307	HN-21	44010-SK7-J13			HNID-507	44310-SM1-900
DB1	B18B	AT	1800	199110	199307	HN-21A50	44010-SK7-J82			HNID-507	44310-SM1-900
DB1	B18B	AT	1800	199110	199307	HN-21A50	44010-SK7-J73			HNID-507	44310-SM1-900
DC2	B18C	MT/AT	1800	199305	199508	HN-21	44010-ST7-J00			HNID-U10	44310-S9A-305
DC2	B18C	MT/AT	1800	199305	199508	HN-21A50	44010-ST7-J50			HNID-U10	44310-S9A-305
DB7	B18B	MT/AT	1800	199307	199508	HN-21	44010-ST7-N00			HNID-U10	44310-S9A-305
DB7	B18B	MT/AT	1800	199307	199508	HN-21A50	44010-ST7-N50			HNID-U10	44310-S9A-305
DB8	B18C	MT/AT	1800	199307	199508	HN-21	44010-ST7-J00			HNID-U10	44310-S9A-305
DB8	B18C	MT/AT	1800	199307	199508	HN-21A50	44010-ST7-J50			HNID-U10	44310-S9A-305
DC5	K20A	AT	2000	200107		HN-55A50	44305-S04-J60	HNIP-HRVA	44310-S04-N00	HNIU-HRV	44310-S0A-900
LAGREAT											
RL1	J35A	4AT	3500	199906			44305-S0X-A51				
LEGEND											
KA1	C20A	MT/AT	2000	198510	198810	HN-23	44305-SD4-030				
KA1	C20A	MT/AT	2000	198510	198810	HN-32A50	44305-SD4-951				
KA1	C20A	MT/AT	2000	198510	198810	HN-32A50	44305-SD4-953				
KA5	C20A	MT/AT	2000	198810	199009	HN-23	44305-SD4-902				
KA5	C20A	MT/AT	2000	198810	199009	HN-32A50	44305-SD4-922				
KA2	C25A	MT/AT	2500	198510	198709	HN-23	44305-SD4-010				
KA2	C25A	MT/AT	2500	198510	198709	HN-32A50	44305-SD4-951				
KA3	C27A	AT	2700	198702	199012	HN-32A50	44305-SG0-950	HNID-517	44310-SD4-900	HNID-518	44310-SD4-300
KA3	C27A	AT	2700	198702	199012	HN-32A50	44305-SD4-953	HNID-517	44310-SD4-900	HNID-518	44310-SD4-300
KA3	C27A	AT	2700	198702	199012	HN-32A50	44305-SD4-922	HNID-517	44310-SD4-900	HNID-518	44310-SD4-300
KA4	C27A	AT	2700	198709	198810	HN-23	44305-DS4-030				
KA4	C27A	AT	2700	198709	198810	HN-32A50	44305-SD4-953				
KA6	C27A	AT	2700	198810	199009	HN-32A50	44305-SD4-922	HNID-517	44310-SD4-900	HNID-518	44310-SD4-300
KA7	C32A	AT	3200	199010	199308	HN-52	44010-SP0-953	HNIP-551	44010-SP0-310	HNID-550	44010-SP0-952

HONDA

MODEL	ENGINE	AT/MT	CC	YEAR	YEAR	OUTER	O.E No.R	INNER R	O.E No.IR	INNER L	O.E No.IL
KA8	C32A	AT	3200	199101	199308	HN-52	44010-SP0-953	HNIP-551	44010-SP0-310	HNID-550	44010-SP0-952
KA7	C32A	MT	3200	199308	199409	HN-52	44010-SP0-J50	HNIP-551	44010-SP0-310	HNID-550	44010-SP0-901
KA8	C32A	AT	3200	199308	199602	HN-52	44010-SP0-J50	HNIP-551	44010-SP0-310	HNID-550	44010-SP0-952
KA9	C35A	AT	3500	199601		HN-32A50	44010-SZ5-J51				
LIFE											
JA4	E07A	AT	660	199301	199602	HN-30	44010-ST5-003				
JA4	E07A	AT	660	199301	199602		44010-ST5-800				
JA4	E07A	MT	660	199301	199602	HN-30	44010-ST5-003				
JA4	E07A	MT	660	199301	199602		44010-ST5-800				
JB1	E07Z	MT/AT	660	199801		HN-46	44305-S2K-000				
JB1	E07Z	MT/AT	660	199810		HN-46	44305-S2K-950				
JB2 4WD	E07E	5MT	660	199810		HN-46	44305-S2L-950				
JB2 4WD	E07E	5MT	660	199810		HN-46	44305-S2L-000				
JB2 4WD	E07E	3AT	660	199810		HN-46	44305-S2K-950				
JB2 4WD	E07E	3AT	660	199810		HN-46	44305-S2K-000				
JB3	E07Z TBO	3AT	660	200012		HN-46	44305-SAP-950				
JB4 4WD	E07Z TBO	3AT	660	200012		HN-46	44305-SAP-950				
LOGO											
GA3	D13B	MT/HMM	1300	199610	200106	HN-61A50	44010-S50-951				
GA3	D13B	MT/CVT	1300	199610	199811	HN-61A50	44010-S50-010				
GA3	D13B	MT/AT	1300	199811	200004	HN-61A50	44305-S50-951				
GA3	D13B	HMM	1300	199811	200004	HN-35A50	44305-S2G-950				
GA3	D13B	MT/AT	1300	200004	200106	HN-61A50	44305-S50-960				
GA3	D13B	HMM	1300	200004	200106	HN-35A50	44305-S2G-960	HNIP-5015	44310-S04-300	HNID-5014	44310-S2G-J00
GA5 4WD	D13B	HMM	1300	199811	200106	HN-35A50	44305-S2T-950	HNIP-5015	44310-S04-300	HNID-5014	44310-S2G-J00
ODYSSEY											
RA1	F22B	AT	2200	199410	199512	HN-33	44010-SM4-310	HNIP-516	44310-SM1-980	HNID-U10	44310-S9A-305
RA1	F22B	MT	2200	199410	199512	HN-33	44010-SX0-000	HNIP-516	44310-SM1-980	HNID-U10	44310-S9A-305
RA1	F22B	AT	2200	199410	199512	HN-29A50	44010-SX0-950	HNIP-516	44310-SM1-980	HNID-U10	44310-S9A-305
RA2 4WD	F22B	AT	2200	199410	199512	HN-33	44010-SM4-310	HNIP-516	44310-SM1-980	HNID-U10	44310-S9A-305
RA2 4WD	F22B	AT	2200	199410	199512	HN-33	44010-SX0-000	HNIP-516	44310-SM1-980	HNID-U10	44310-S9A-305
RA2 4WD	F22B	AT	2200	199410	199512	HN-29A50	44010-SX0-950	HNIP-516	44310-SM1-980	HNID-U10	44310-S9A-305
RA6	F23A	4AT	2300	19912	200311	HN-29A50	44305-S3N-950				
RA6	F23A	4AT	2300	19912	200311	HN-29A50	44014-S3X-950				
RA6	F23A	4AT	2300	19912	200311	HN-29A50	44014-SX0-C61				
RA7 4WD	F23A	4AT	2300	19912	200310	HN-29A50	44305-S3N-951				
RA6	F23A	4AT	2300	199912	200311	HN-29A50	44305-S3N-951				
RA7 4WD	F23A	4AT	2300	199912	200310	HN-29A50	44305-S3N-950				
RA7 4WD	F23A	4AT	2300	199912	200310	HN-29A50	44014-S3X-950				
RA7 4WD	F23A	4AT	2300	199912	200310	HN-29A50	44014-SX0-C61				
RA8	J30A	5MT	3000	19912	200310	HN-29A50	44305-S3R-951	HNID-507	44310-SM1-900		
RA9 4WD	J30A	5AT	3000	199912	200310	HN-29A50	44305-S3R-951	HNID-507	44310-SM1-900		
ORTHIA											
EL1	B18B	MT/AT	1800	199602	200201	HN-24	44010-S09-000				
EL1	B18B	MT/AT	1800	199602	200201	HN-24A50	44010-S04-J51	HNIP-HRVA	44310-S10-320	HNIU-HRV	44310-S10-902
EL2	B20B	AT	2000	199602	200201	HN-24	44010-S09-000				
EL2	B20B	AT	2000	199602	200201	HN-24A50	44010-S09-950				
EL3 4WD	B20B	AT	2000	199602	200201	HN-24	44010-S04-J51	HNIP-HRVA	44310-S10-320	HNIU-HRV	44310-S10-902
EL3 4WD	B20B	AT	2000	199602	200201	HN-24A50	44010-S04-J51	HNIP-HRVA	44310-S10-320	HNIU-HRV	44310-S10-902
PARTNER											
EY6	D13B	MT/AT	1300	199602		HN-35	44010-S04-010				
EY7	D15B	MT/AT	1500	199602		HN-35	44010-S04-010				
EY8	D16A	MT/AT	1600	199602		HN-24	44010-S08-000	HNIP-HRVA	44310-S10-320	HNIU-HRV	44310-S10-902
PRELUDE											
SN	EK	MT/AT	1600	197801	198001	HN-04	44305-692-003				
SN	EL	MT/AT	1600	197801	198001	HN-04	44305-692-003				
SN	EK	MT/AT	1600	198101	198301	HN-05	44305-692-671				
SN	EL	MT/AT	1600	198101	198301	HN-05	44305-692-671				
SN	EK	MT/AT	1800	197801	198001	HN-04	44305-692-003				
SN	EK	MT/AT	1800	198101	198201	HN-05	44305-692-671				
AB	ES	AT	1800	198201	198701	HN-18	44305-SB0-010				
AB	ES	AT	1800	198201	198701	HN-18	44305-SB0-030				
AB	ES	AT	1800	198201	198701	HN-18	44305-SB0-030				
AB	ES	AT	1800	198211	198704	HN-18	44305-SB0-020				
AB	ES	AT	1800	198211	198704		44305-SB0-952				
AB	ES	AT	1800	198211	198704		44305-SB0-981				
AB	ES	MT	1800	198401	198701	HN-18	44305-SB0-030				
AB	ES	MT	1800	198401	198701	HN-18	44305-SB0-030				
BB	ES	AT	1800	198401	198701	HN-18	44305-SF0-621				
BB	ES	MT	1800	198401	198701	HN-18	44305-SF0-621				
BB	ES	MT/AT	1800	198401	198701	HN-18	44305-SF0-921				
BB	ES	MT/AT	1800	198401	198701	HN-18	44305-SF0-921				
BA1	B20A	MT/AT	2000	198501	198701	HN-20	44305-SF0-971				
BA1	B20A	MT/AT	2000	198506	198704	HN-20	44305-SF0-973				
BA1	B20A	MT/AT	2000	198506	198704	HN-20A50	44305-SF0-983				
BA4	B20A	MT/AT	2000	198701	198901	HN-21	44305-SF1-G11				
BA4	B20A	MT/AT	2000	198701	198901	HN-21	44305-SF1-G00				
BA4	B20A	MT/AT	2000	198701	198901	HN-21	44305-SF1-910				
BA4	B20A	MT/AT	2000	198701	198901	HN-21	44305-SF1-911				
BA4	B20A	MT/AT	2000	198701	198901	HN-21	44305-SF1-912				

HONDA

MODEL	ENGINE	AT/MT	CC	YEAR	YEAR	OUTER	O.E No.R	INNER R	O.E No.IR	INNER L	O.E No.IL
BA4	B20A	MT/AT	2000	198701	198901	HN-21	44305-SF1-913				
BA4	B20A	MT/AT	2000	198701	198901	HN-21	44305-SF1-914				
BA4	B20A	MT/AT	2000	198701	198901	HN-21	44305-SF1-G10				
BA4	B20A	MT/AT	2000	198701	198901	HN-21	44305-SF1-G11				
BA4	B20A	MT/AT	2000	198701	198901	HN-21	44305-SF1-G12				
BA4	B20A	MT/AT	2000	198701	198901	HN-21	44305-SF1-G13				
BA5	B20A	MT/AT	2000	198701	198901	HN-21	44305-SF1-910				
BA5	B20A	MT/AT	2000	198701	198901	HN-21	44305-SF1-911				
BA5	B20A	MT/AT	2000	198701	198901	HN-21	44305-SF1-912				
BA5	B20A	MT/AT	2000	198701	198901	HN-21	44305-SF1-913				
BA5	B20A	MT/AT	2000	198701	198901	HN-21	44305-SF1-914				
BA5	B20A	MT/AT	2000	198701	198901	HN-21	44305-SF1-G10				
BA5	B20A	MT/AT	2000	198701	198901	HN-21	44305-SF1-G11				
BA5	B20A	MT/AT	2000	198701	198901	HN-21	44305-SF1-G12				
BA5	B20A	MT/AT	2000	198701	198901	HN-21	44305-SF1-G13				
BA5	B20A	MT/AT	2000	198701	198901	HN-21	44305-SF1-G12				
BA5	B20A	MT/AT	2000	198701	198901	HN-21	44305-SF1-G13				
BA4	B20A	MT/AT	2000	198701	198901	HN-21A50	44305-SF1-970				
BA4	B20A	MT/AT	2000	198701	198901	HN-21A50	44305-SF1-970				
BA4	B20A	MT/AT	2000	198701	198901	HN-21A50	44305-SF1-972				
BA4	B20A	MT/AT	2000	198701	198901	HN-21A50	44305-SF1-973				
BA5	B20A	MT/AT	2000	198701	198901	HN-21A50	44305-SF1-970				
BA5	B20A	MT/AT	2000	198701	198901	HN-21A50	44305-SF1-970				
BA4	B20A	MT/AT	2000	198704	199109	HN-21	44305-SF1-913				
BA4	B20A	MT/AT	2000	198704	199109	HN-22	44305-SF1-915	HNIP-516	44310-SM1-980	HNID-507	44310-SM1-900
BA4	B20A	MT/AT	2000	198704	199109	HN-22A50	44305-SF1-975	HNIP-516	44310-SM1-980	HNID-507	44310-SM1-900
BA5 4WS	B20A	MT/AT	2000	198704	199109	HN-21	44305-SF1-913				
BA5 4WS	B20A	MT/AT	2000	198704	199109	HN-22	44305-SF1-915	HNIP-516	44310-SM1-980	HNID-507	44310-SM1-900
BA5 4WS	B20A	MT/AT	2000	198704	199109	HN-21A50	44305-SF1-973				
BA5 4WS	B20A	MT/AT	2000	198704	199109	HN-22A50	44305-SF1-975	HNIP-516	44310-SM1-980	HNID-507	44310-SM1-900
BA4	B20A	MT/AT	2000	198707	198901	HN-21	44305-SF1-910				
BA4	B20A	MT/AT	2000	198901	199109	HN-22A50	44305-SF1-975	HNIP-516	44310-SM1-980	HNID-507	44310-SM1-900
BA5	B20A	MT/AT	2000	198901	199109	HN-22A50	44305-SF1-975	HNIP-516	44310-SM1-980	HNID-507	44310-SM1-900
BA7	B21A	AT	2100	199010	199109	HN-22	44305-SF1-915	HNIP-516	44310-SM1-980	HNID-507	44310-SM1-900
BA7	B21A	AT	2100	199010	199109	HN-22A50	44305-SF1-975	HNIP-516	44310-SM1-980	HNID-507	44310-SM1-900
BA8	F22B	5MT	2200	199109	199409	HN-22	44010-SS0-010				
BA8	F22B	5MT	2200	199109	199409	HN-22	44010-SS0-030				
BA8	F22B	5MT	2200	199109	199409	HN-22A50	44010-SS0-981				
BA8	F22B	5MT	2200	199109	199409	HN-22A50	44010-SS0-983				
BA8	F22B	5MT	2200	199109	199409	HN-22A50	44010-SS0-J82				
BA8	F22B	5MT	2200	199109	199409	HN-22A50	44010-SS0-J84				
BA8	F22B	4AT	2200	199109	199409	HN-22	44010-SS0-010				
BA8	F22B	4AT	2200	199109	199409	HN-22	44010-SS0-010				
BA8	F22B	4AT	2200	199109	199409	HN-22A50	44010-SS0-981				
BA8	F22B	4AT	2200	199109	199409	HN-22A50	44010-SS0-983				
BA8	F22B	4AT	2200	199109	199409	HN-22A50	44010-SS0-J82				
BA8	F22B	4AT	2200	199109	199409	HN-22A50	44010-SS0-J84				
BA9 4WS	F22B	5MT	2200	199109	199409	HN-22A50	44010-SS0-981				
BA9 4WS	F22B	5MT	2200	199109	199409	HN-22A50	44010-SS0-983				
BA9 4WS	F22B	5MT	2200	199109	199409	HN-22A50	44010-SS0-J82				
BA9 4WS	F22B	5MT	2200	199109	199409	HN-22A50	44010-SS0-J84				
BA9 4WS	F22B	4AT	2200	199109	199409	HN-22	44010-SS0-010				
BA9 4WS	F22B	4AT	2200	199109	199409	HN-22	44010-SS0-010				
BA9 4WS	F22B	4AT	2200	199109	199409	HN-22A50	44010-SS0-981				
BA9 4WS	F22B	4AT	2200	199109	199409	HN-22A50	44010-SS0-J82				
BA9 4WS	F22B	4AT	2200	199109	199409	HN-22A50	44010-SS0-J84				
BA9 4WS	F22B	4AT	2200	199109	199409	HN-22A50	44010-SS0-983				
BB4	H22A	5MT	2200	199109	199409	HN-22	44010-SS0-010				
BB4	H22A	5MT	2200	199109	199409	HN-22	44010-SS0-030				
BB4	H22A	5MT	2200	199109	199409	HN-22A50	44010-SS0-981				
BB4	H22A	5MT	2200	199109	199409	HN-22A50	44010-SS0-983				
BB4	H22A	5MT	2200	199109	199611	HN-22A50	44010-SS0-J82				
BB4	H22A	5MT	2200	199109	199611	HN-22A50	44010-SS0-J84				
BB4	H22A	4AT	2200	199109	199409	HN-22	44010-SS0-010				
BB4	H22A	4AT	2200	199109	199409	HN-22	44010-SS0-010				
BB4	H22A	4AT	2200	199109	199409	HN-22A50	44010-SS0-981				
BB4	H22A	4AT	2200	199109	199409	HN-22A50	44010-SS0-983				
BB4	H22A	4AT	2200	199109	199611	HN-22A50	44010-SS0-J82				
BB4	H22A	4AT	2200	199109	199611	HN-22A50	44010-SS0-J84				
BB1 4WS	H22A	5MT	2200	199109	199409	HN-22	44010-SS0-010				
BB1 4WS	H22A	5MT	2200	199109	199409	HN-22	44010-SS0-030				
BB1 4WS	H22A	5MT	2200	199109	199409	HN-22A50	44010-SS0-981				
BB1 4WS	H22A	5MT	2200	199109	199409	HN-22A50	44010-SS0-983				
BB1 4WS	H22A	5MT	2200	199109	199409	HN-22A50	44010-SS0-J82				
BB1 4WS	H22A	5MT	2200	199109	199409	HN-22A50	44010-SS0-J84				
BB1 4WS	H22A	4AT	2200	199109	199409	HN-22	44010-SS0-010				
BB1 4WS	H22A	4AT	2200	199109	199409	HN-22	44010-SS0-010				
BB1 4WS	H22A	4AT	2200	199109	199409	HN-22A50	44010-SS0-981				
BB1 4WS	H22A	4AT	2200	199109	199409	HN-22A50	44010-SS0-983				
BB1 4WS	H22A	4AT	2200	199109	199409	HN-22A50	44010-SS0-J82				
BB1 4WS	H22A	4AT	2200	199109	199409	HN-22A50	44010-SS0-J84				
BA8	F22B	AT	2200	199109	199611	HN-22	44010-SS0-960				

HONDA

MODEL	ENGINE	AT/MT	CC	YEAR	YEAR	OUTER	O.E No.R	INNER R	O.E No.IR	INNER L	O.E No.IL
BA8	F22B	AT	2200	199109	199409	HN-22A50	44010-SS0-983				
BA9 4WS	F22B	AT	2200	199109	199409	HN-22	44010-SS0-030				
BA9 4WS	F22B	AT	2200	199109	199409	HN-22A50	44010-SS0-983				
BA9 4WS	F22B	MT	2200	199109	199409	HN-22	44010-SS0-030				
BA9 4WS	F22B	MT	2200	199109	199409	HN-22A50	44010-SS0-983				
BB1 4WS	H22A	AT	2200	199109	199611	HN-22A50	44010-SS0-J84				
BB1 4WS	H22A	AT	2200	199109	199611	HN-22A50	44010-SS0-J84				
BB4	H22A	AT	2200	199109	199409	HN-22	44010-SS0-030				
BB4	H22A	AT	2200	199109	199409	HN-22A50	44010-SS0-983				
BA9 4WS	F22B	5MT	2200	199109	199409	HN-22	44010-SS0-010				
BA8	F22B	AT	2200	199109	199409	HN-22	44010-SS0-030				
BB1 4WS	H22A	AT	2200	199109	199409	HN-22	44010-SS0-030				
BA8	F22B	5MT	2200	199409	199611	HN-22	44010-SS0-960				
BA8	F22B	5MT	2200	199409	199611	HN-22A50	44010-SS0-930				
BA8	F22B	5MT	2200	199409	199611	HN-22A50	44010-SS0-J84				
BA8	F22B	4AT	2200	199409	199611	HN-22A50	44010-SS0-930				
BA9 4WS	F22B	5MT	2200	199409	199611	HN-22	44010-SS0-960				
BA9 4WS	F22B	5MT	2200	199409	199611	HN-22A50	44010-SS0-930				
BA9 4WS	F22B	5MT	2200	199409	199611	HN-22A50	44010-SS0-J84				
BA9 4WS	F22B	4AT	2200	199409	199611	HN-22	44010-SS0-960				
BA9 4WS	F22B	4AT	2200	199409	199611	HN-22A50	44010-SS0-930				
BA9 4WS	F22B	4AT	2200	199409	199611	HN-22A50	44010-SS0-J84				
BB4	H22A	5MT	2200	199409	199611	HN-22	44010-SS0-960				
BB4	H22A	5MT	2200	199409	199611	HN-22A50	44010-SS0-930				
BB4	H22A	4AT	2200	199409	199611	HN-22	44010-SS0-960				
BB4	H22A	4AT	2200	199409	199611	HN-22A50	44010-SS0-930				
BB1 4WS	H22A	5MT	2200	199409	199611	HN-22A50	44010-SS0-J84				
BB1 4WS	H22A	4AT	2200	199409	199611	HN-22A50	44010-SS0-J84				
BB1 4WS	H22A	AT	2200	199409	199611	HN-22	44010-SS0-960				
BB1 4WS	H22A	AT	2200	199409	199611	HN-22A50	44010-SS0-930				
BB1 4WS	H22A	MT	2200	199409	199611	HN-22	44010-SS0-960				
BB1 4WS	H22A	MT	2200	199409	199611	HN-22A50	44010-SS0-930				
BB5	F22B	5MT	2200	199611	200102	HN-29A50	44010-S30-950				
BB5	F22B	MT/AT	2200	199611	200102	HN-33	44010-S30-951				
BB5	F22B	MT/AT	2200	199611	200102	HN-29A50	44010-S30-N50				
BB5	F22B	4AT	2200	199611	200102	HN-29A50	44010-S30-950				
BB7 4WS	F22B	5MT	2200	199611	200102	HN-29A50	44010-S30-950				
BB7 4WS	F22B	MT/AT	2200	199611	200102	HN-33	44010-S30-951				
BB7 4WS	F22B	MT/AT	2200	199611	200102	HN-29A50	44010-S30-N50				
BB7 4WS	F22B	4AT	2200	199611	200102	HN-29A50	44010-S30-950				
BB6	H22A	5MT	2200	199611	200102	HN-29A50	44010-S30-950				
BB6	H22A	MT/AT	2200	199611	200102	HN-33	44010-S30-951				
BB6	H22A	MT/AT	2200	199611	200102	HN-29A50	44010-S30-N50				
BB6	H22A	4AT	2200	199611	200102	HN-29A50	44010-S30-950				
BB8	H22A	5MT	2200	199611	200102	HN-29A50	44010-S30-950				
BB8	H22A	MT/AT	2200	199611	200102	HN-33	44010-S30-951				
BB8	H22A	MT/AT	2200	199611	200102	HN-29A50	44010-S30-N50				
BB8	H22A	4AT	2200	199611	200102	HN-29A50	44010-S30-950				
BB6	H22A	5MT	2200	199611	200102	HN-29A50	44010-S30-N20				
QUINT											
DA2	EW	MT/AT	1500	198609	198904	HN-20	44305-SD2-030				
AV	ZC	AT	1600	198502	198904	HN-20	44305-SD2-030				
AV	ZC	MT	1600	198502	198904	HN-20	44305-SD2-030				
AV	ZC PF1	MT/AT	1600	198502	198904		44305-SD2-963				
DA1	ZC	AT	1600	198510	198904	HN-20	44305-SD2-030				
DA1	ZC	MT	1600	198510	198904	HN-20	44305-SD2-030				
DA1	ZC PF1	MT/AT	1600	198510	198904		44305-SD2-963				
RAFAGA											
CE4	G20A	MT/AT	2000	199310	199709	HN-22	44010-SW3-000				
CE4	G20A	MT/AT	2000	199310	199709	HN-22A50	44010-SW3-950				
CE5	G25A	AT	2500	199310	199709	HN-22	44010-SW3-000				
CE5	G25A	AT	2500	199310	199709	HN-22A50	44010-SW3-950				
SABER											
UA1	G20A	AT	2000	199502	199810	HN-33	44010-SW5-000				
UA1	G20A	AT	2000	199502	199810	HN-29A50	44010-SW5-950				
UA2	G25A	AT	2500	199502	199810	HN-33	44010-SW5-000				
UA2	G25A	AT	2500	199502	199810	HN-29A50	44010-SW5-950				
UA3	G32A	AT	3200	199506	199810		44010-SZ5-J01				
UA3	G32A	AT	3200	199506	199810	HN-32A50	44010-SZ5-J51				
S-MX											
RH	B20B	4AT	2000	199611	200201	HN-29A50	44010-S47-950				
RH	B20B	4AT	2000	199611	200201	HN-33	44010-S47-000				
RH 4WD	B20B	4AT	2000	199611	200201	HN-29A50	44010-S47-950				
RH 4WD	B20B	4AT	2000	199611	200201	HN-33	44010-S47-000				
STEP WAGON											
RF1	B20B	AT	2000	199604	200104	HN-33	44010-S47-000				
RF1	B20B	AT	2000	199604	200104	HN-29A50	44010-S47-950				
RF2 4WD	B20B	AT	2000	199604	200104	HN-33	44010-S47-000				
RF2 4WD	B20B	AT	2000	199604	200104	HN-29A50	44010-S47-950				
STREAM											

HONDA

MODEL	ENGINE	AT/MT	CC	YEAR	YEAR	OUTER	O.E No.R	INNER R	O.E No.IR	INNER L	O.E No.IL
RN1	D17A	4AT	1700	200010		HN-55A50	44014-S7A-J50	HNIP-HRVA	44310-S04-N00	HNIU-HRV	44310-S0A-900
RN1	D17A	4AT	1700	200010		HN-55A50	44014-S5A-J52	HNIP-HRVA	44310-S04-N00	HNIU-HRV	44310-S0A-900
RN1	D17A	4AT	1700	200011		HN-55A50	44305-S5A-J61	HNIP-HRVA	44310-S04-N00	HNIU-HRV	44310-S0A-900
RN2 4WD	D17A	4AT	1700	200011		HN-55A50	44305-S7B-950	HNIP-HRVA	44310-S04-N00	HNIU-HRV	44310-S0A-900
RN2 4WD	D17A	4AT	1700	200011		HN-55A50	44305-S5C-N51	HNIP-HRVA	44310-S04-N00	HNIU-HRV	44310-S0A-900
RN3	K20A	5MT	2000	200010		HN-55A50	44014-S6M-950	HNIP-HRVM	44310-S0A-300	HNIU-HRV	44310-S0A-900
RN3	K20A	5MT	2000	200011		HN-55A50	44305-S7C-950	HNIP-HRVM	44310-S0A-300	HNIU-HRV	44310-S0A-900
RN4 4WD	K20A	4AT	2000	200011		HN-55A50	44305-S7C-950	HNIP-HRVA	44310-S04-N00	HNIU-HRV	44310-S0A-900
RN5	K20B	CVT	2000	200312		HN-55A50	44305-S7C-950	HNIP-HRVA	44310-S04-N00	HNIU-HRV	44310-S0A-900
STREET											
HH4 4WD	E07A		660	199002	199906	HN-42	44010-SJ7-003				
HH4 4WD	E07A		660	199002	199906	HN-42	44010-SJ7-013				
TODAY											
JW1	EH	MT/AT	550	198509	198802	HN-27	44305-SD5-003				
JW2	E05A	MT/AT	550	198802	199003	HN-26	44305-SD5-013				
JW2	E05A	MT/AT	550	198802	199003	HN-30	44305-SD5-023				
JA1	E05A	MT/AT	550	198803	199003	HN-26	44305-SD5-013				
JA1	E05A	MT/AT	550	198803	199003	HN-30	44305-SD5-023				
JW3	E07A	MT/AT	660	199003	199109	HN-30	44305-SD5-901				
JW4 4WD	E07A	MT/AT	660	199003		HN-30	44305-SN4-003				
JA2	E07A	MT/AT	660	199003	199109	HN-30	44305-SD5-901				
JA3 4WD	E07A	MT/AT	660	199003	199212	HN-30	44305-SN4-003				
JA2	E07A	MT/AT	660	199109	199212	HN-30	44305-SD5-901				
JW3	E07A	MT/AT	660	199109		HN-30	44305-SD5-901				
JA4	E07A	AT	660	199301	199602	HN-30	44010-ST5-003				
JA4	E07A	AT	660	199301	199602		44010-ST5-800				
JA4	E07A	MT	660	199301	199602	HN-30	44010-ST5-003				
JA4	E07A	MT	660	199301	199602		44010-ST5-800				
JA5 4WD	E07A	MT/AT	660	199301	199602	HN-30	44010-ST6-003				
TORNEO											
CF3	F18B	5MT	1800	199709			44010-S0A-J50				
CF3	F18B	5MT	1800	199709			44010-S0A-950				
CF3	F18B	4AT	1800	199709			44010-S0A-J50				
CF3	F18B	4AT	1800	199709			44010-S0A-950				
CF4	F20B	5MT	2000	199709			44010-S0A-J50				
CF4	F20B	5MT	2000	199709			44010-S0A-950				
CF5 4WD	F20B	4AT	2000	199709			44010-S0A-J50				
CF5 4WD	F20B	4AT	2000	199709			44010-S0A-950				
CF4	F20B	4AT	2000	199709			44010-S0A-J50				
CF4	F20B	4AT	2000	199709			44010-S0A-950				
U.S CIVIC											
EJ1	D16A	4AT	1600	199302	199601	HN-24	44010-SR3-030				
EJ7	D16A	HMM	1600	199601		HN-24A50	44010-S01-961				
VIGOR											
CA1	A18A	AT	1800	198506	198909	HN-19	44305-SE0-010				
CA1	A18A	AT	1800	198506	198909	HN-19	44305-SE0-J00				
CA1	A18A	AT	1800	198506	198909	HN-19A50	44305-SE0-951				
CA1	A18A	AT	1800	198506	198909	HN-19A50	44305-SE0-J51				
CA1	A18A	MT	1800	198506	198909	HN-19	44305-SE0-010				
CA1	A18A	MT	1800	198506	198909	HN-19A50	44305-SE0-951				
CA2	B18A	AT	1800	198506	198909	HN-20	44305-SE0-923				
CA2	B18A	AT	1800	198506	198909	HN-20A50	44305-SE0-964				
CA2	B18A	MT	1800	198506	198909	HN-20	44305-SE0-923				
CA2	B18A	MT	1800	198506	198909	HN-20A50	44305-SE0-964				
CA3	B20A	MT/AT	2000	198506	198909	HN-20	44305-SE0-J21				
CA3	B20A	MT/AT	2000	198506	198909	HN-20A50	44305-SE0-J62				
CA5	A20A	AT	2000	198705	198909	HN-20	44305-SE0-923				
CA5	A20A	AT	2000	198705	198909	HN-20A50	44305-SE0-964				
CB5	G20A	MT/AT	2000	198910	199502	HN-22	44010-SL4-010				
CB5	G20A	MT/AT	2000	198910	199502	HN-22A50	44010-SL4-951				
CC3	G20A	AT	2000	199201	199502	HN-22	44010-SL5-N01				
CC3	G20A	AT	2000	199201	199502	HN-22A50	44010-SL5-N82				
CC2	G25A	AT	2500	199201	199502	HN-32	44010-SL5-010			HNIU-5028	44310-SL5-300
CC2	G25A	AT	2500	199201	199502	HN-32A50	44010-SL5-952			HNIU-5028	44310-SL5-300
CC2	G25A	AT	2500	199201	199502	HN-32A50	44010-SL5-910			HNIU-5028	44310-SL5-300
Z											
PA1 AWD	E07Z	4AT	660	199810	200201		44305-S2R-951				
PA1 4WD	E07Z	4AT	660	199810	200201		44305-S2R-003				
PA1 4WD	E07Z TBO	4AT	660	199810	200201		44305-S2R-951				
PA1 4WD	E07Z TBO	4AT	660	199810	200201		44305-S2R-003				

HYUNDAI

MODEL	ENGINE	AT/MT	CC	YEAR	YEAR	OUTER	O.E No.R	INNER R	O.E No.IR	INNER L	O.E No.IL
ACCENT											
X-3	G4EH	MT/AT	1300	199410	200001	MT-04A29	49508-22E00	MTIU-5035	49505-24A01	MTIU-5035	49505-24A01
TB		MT/AT	1300	200209		MT-04A29	49508-22E00	MTIU-5035	49505-24A01	MTIU-5035	49505-24A01
		AT	1500	199401		MT-04	49508-22B00	MTIU-5035	49505-24A01	MTIU-5035	49505-24A01
-	-	AT	1500	199401		MT-04	49505-28B00	MTIU-5035	49505-24A01	MTIU-5035	49505-24A01
		AT	1500	199401		MT-04	49505-28B01	MTIU-5035	49505-24A01	MTIU-5035	49505-24A01
X-3	G4EH	MT/AT	1300	199410	200001	MT-04A29	49508-22E00	MTIU-5035	49505-24A01	MTIU-5035	49505-24A01
USA		MT/AT	1500	199501		MT-04A44					
ATOS											
-	-	MT/AT	1000	-	-	HY-100	49508-05A00	HYIU-100	49505-02A00	HYIU-100	49505-02A00
-	-	MT/AT	1000	-	-	HY-1002A38	49507-02A10	HYIU-100	49505-02A00	HYIU-100	49505-02A00
GALLOPER											
-	-	MT/AT		199806	200206	MT-13	S2261101E				
GETZ											
TB	-	MT/AT	1300	200201	-	HY-12A48	49500-1C260				
TB	-	MT/AT	1600	200201	-	HY-12A48	49500-1C260				
ELANTRA											
NU	4G15	MT/AT	1500	199102	199305	MT-04	49508-28A00	MTIU-5035	49505-24A01	MTIU-5035	49505-24A01
NU	4G32	MT/AT	1600	199102	199305	MT-06	49508-28B00				
NU	4G38	MT/AT	1600	199212	199305	MT-06	49508-28E00			MTIU-5026	49505-29A00
-	-	5MT	1600	-	-	MT-05	49500-2D000	MTIU-5026	49505-29A00	MTIU-5026	49505-29A00
-	-	5MT	1600	-	-	MT-05	49500-2D002	MTIU-5026	49505-29A00	MTIU-5026	49505-29A00
-	-	4AT	1600	-	-	MT-07	49500-2D100				
-	-	4AT	1600	-	-	MT-07	49500-2D102				
-	-	4AT	1600	-	-	MT-07	49510-29000				
		4AT	1800	200107	200505	HY-ELA44	495072DA20				
EXCEL											
MU	4G15	MT/AT	1500	198910	199112	MT-04	49508-21A00	MTIU-5035	49505-24A01	MTIU-5035	49505-24A01
LANTRA I											
NU		MT/AT	1500	199102	199509	MT-04	49508-28A00	MTIU-5035	49505-24A01	MTIU-5035	49505-24A01
	G15B	MT/AT	1500	199010	199511	MT-01	49507-21000				
NU		MT/AT	1600	199102	199509	MT-06	49508-28B00				
NU		MT/AT	1600	199212	199509	MT-06	49508-28E00			MTIU-5026	49505-29A00
LANTRA II											
NU		MT/AT	1500	199506	199806	MT-07					
LAVITA MATRIX											
-	-	MT/AT	1500	200103		HY-14A44	49500-17050				
-	-	MT/AT	1800	200103		HY-002A44	49500-17250				
PONY XP											
HF	4G13B	MT/AT	1300	198511	198701	MT-04	-	MTIU-5035	49505-24A01	MTIU-5035	49505-24A01
HJ	4G15B	MT/AT	1500	198511	198901	MT-04	-	MTIU-5035	49505-24A01	MTIU-5035	49505-24A01
MU	4G15B	MT/AT	1500	198904	199112	MT-04	49508-21A00	MTIU-5035	49505-24A01	MTIU-5035	49505-24A01
SANTA FE											
-	-	MT/AT	2000	200012	200612	HY-SFA52	49501-26561				
-	-	MT	2400	200012	200612	HY-SFA52	49501-26361	HYIR-SF	49605-26D50	HYIL-SF	49505-26D00
-	-	MT/AT	2700	200012	200612	HY-SFA52	49501-26560			HYIL-SF2	49505-26E00
SCOUPE											
MU	4G15	MT/AT	1500	198910	199205	MT-04	49508-24A00	MTIU-5035	49505-24A01	MTIU-5035	49505-24A01
MU TBO	4G15	MT/AT	1500	199206		MT-06	49508-23B00				
MU	4G15	MT/AT	1500	199506		MT-06	49508-23B00			MTIU-5026	49505-29A00
SONATA											
KU	4G37	MT	1800	198905	199109	MT-06	49607-33A20			MTIU-5026	49505-29A00
KU	4G37	AT	1800	198905	199109	MT-05	49507-33B10	MTIU-5026	49505-29A00	MTIU-5026	49505-29A00
KU	4G63	MT	2000	198905	199109	MT-06	49607-33A20			MTIU-5026	49505-29A00
KU	4G63	AT	2000	198905	199105	MT-05	49507-33B10	MTIU-5026	49505-29A00	MTIU-5026	49505-29A00
-	-	MT/AT	2000	200101		HY-011A47	49507-38F00				
-	-	MT/AT	2000	200101		HY-011	49507-38E00				
-	-	MT/AT	2400	199206	199406	MT-06A47	49507-33D10				
EF	G6BW	4AT	2500	199810	200110	HY-SNTA47	49506-38640				
EU4	G6BA	4AT	2700	200110		HY-SNTA47	49506-38640				
-	V6	MT/AT	3000	198906	199306	MT-17		MTIP-5024	49605-33C00	MTIP-5024	49605-33C00
-	V6	MT/AT	3000	199306	199606	MT-17		MTIP-5025	49605-34A00	MTIP-5025	49605-34A00
STELLAR											
TK	4G32	MT/AT	1600	198403	199105	MT-05		MTIU-5026	49505-29A00	MTIU-5026	49505-29A00
TK	4G63	MT/AT	2000	198605	198905	MT-06				MTIU-5026	49505-29A00

HYUNDAI

MODEL	ENGINE	AT/MT	CC	YEAR	YEAR	OUTER	O.E No.R	INNER R	O.E No.IR	INNER L	O.E No.IL
TERRACAN											
	D4BH (4D56)	MT/AT	2500	200101	200312	MT-13	51614-H1A00		51621-H1A00	HYIL-TER	51611-H1A00
-	-	MT/AT		200106		MT-13	51614-H1000	51621-H1000	HYIR-TER2	HYIL-TER2	51611-H1000
TRAJET											
FO	D4EA	4AT	2000	200104		HY-SNTA47	49500-09800				
FO	G6BA	4AT	2700	200009		HY-SNTA47	49500-09800				
TUCSON											
4WD		MT	2000	200404	200406	KA-NSA48	49501-2E500	KAIR-550	49505-2EA10	KAIL-500	49505-2EA00
4WD		MT	2000	200406		KA-NSA48	49501-2E400	KAIR-550	49505-2EA10	KAIL-500	49505-2EA50
4WD		AT	2000	200404	200406	KA-NSA48	49500-2E250	KAIR-250	49605-2EA50		49505-26A00
4WD		AT	2000	200406		KA-NSA48	49500-2E250	KAIR-250	49605-2EA50	KAIL-910	49505-2EJ10
4WD	CRDi	AT/MT	2000	200404		KA-NS2A48	49500-2E550	KAIR-550	49505-2EA10	KAIL-900	49505-2EA20
4WD	CRDi	MT	2000	200404		KA-NS2A48	49500-2E750	KAIR-750	49505-2EA30	KAIL-900	49505-2EA20
4WD	CRDi	MT	2000	200404	200410	KA-NS2A48	49500-2E700	KAIR-750	49505-2EA30	KAIL-900	49505-2EA20
4WD	CRDi	MT	2000	200410		KA-NS2A48	49500-2E600	KAIR-750	49505-2EA60	KAIL-900	49505-2EA20
		AT/MT	2700	200404		KA-NS2A48	49500-2E950	KAIR-950	49505-2EJ50	KAIL-900	49505-2EA90
VERNA											
-	-	4AT	1500	199906		HY-12A44	49500-25510	HYIR-ACC	49505-25B00	HYIL-ACC	49505-25A00
-	-	5MT	1500	199906		HY-12	49500-25311	HYIR-ACC	49605-25B00	HYIL-ACC	49505-25A00

ISUZU

MODEL	ENGINE	AT/MT	CC	YEAR	YEAR	OUTER R/L	O.E No.R/L	INNER R	O.E No.IR	INNER L	O.E No.IL
ASKA											
JJ110	4ZB1	5MT	1800	198507	199005		8-94428-698-0				
JJ110	4ZB1	AT	1800	198507	199005		8-94428-700-0				
BCK	EJ18	5MT	1800	199006	199109	SB-08	28021-AA501				
BCK	EJ18	4AT	1800	199006	199109	SB-08	28021-AA551				
BCK	EJ18	5MT	1800	199110	199207	SB-07	28021-AA003				
BCK	EJ18	4AT	1800	199110	199309	SB-07	28021-AA541				
BCK	EJ18	5MT	1800	199208	199309		28021-AA481				
JJ120	4ZC1	5MT	2000	198507	199005		8-94428-698-0				
JJ120	4ZC1	AT	2000	198507	199005		8-94428-700-0				
JJ510	4FC1	MT	2000	198507	199005		8-94428-698-0				
JJ510	4FC1	AT	2000	198507	199005		8-94428-700-0				
BCL	EJ20	5MT	2000	199006	199105	SB-09	28021-AA530				
BCL	EJ20	4AT	2000	199006	199303	SB-09	28021-AA560				
BCM 4WD	EJ20	5MT	2000	199006	199109	SB-08	28021-AA511				
BCM 4WD	EJ20	4AT	2000	199006	199309	SB-07	28021-AA541				
BCM 4WD	EJ20	5MT	2000	199110	199309	SB-07	28021-AA491				
BCL	EJ20	4AT	2000	199304	199309	SB-08	28021-AA551				
CJ1	F20B	4AT	2000	199403			5-86001 -036-0				
CJ1	F20B	4AT	2000	199403			5-86007-812-0				
CJ1	F20B	4AT	2000	199403			5-86007-661-0				
BIG HORN/TROOPER											
UBS13	G200	MT	2000	198401	198501	ISZ-01	8-94259-812-0				
UBS12	4ZC1	MT/HMM	2000	198501	198801	ISZ-01	8-94247-650-0				
UBS12	4ZC1	MT	2000	198701	198801	ISZ-05	8-94426-401-3				
UBS52	C223	MT	2300	198101	198601	ISZ-01	8-94124-628-0				
UBS52	C223	MT	2300	198101	198701	ISZ-01	8-94124-628-0				
UBS52	C223-T	MT	2300	198701	198801	ISZ-05	8-94423-037-1				
UBS52	C223	MT	2300	198701	198801	ISZ-05	8-94423-037-1				
UBS52	C223	MT	2300	198809	198912	ISZ-04	8-94173-304-3	ISIR-1004	8-94312-676-0	ISIL-1004	8-94313-103-0
UBS52	C223-T	MT	2300	198909	198912	ISZ-04	8-94173-304-3	ISIR-1004	8-94312-676-0	ISIL-1004	8-94313-103-0
UBS17	4ZE1	MT	2600	198701	199112	ISZ-05	8-94426-401-3				
UBS17	4ZE1	AT	2600	198801	198901	ISZ-04	8-94173-304-3	ISIR-1004	8-94312-676-0	ISIL-1004	8-94313-103-0
UBS17	4ZE1	4AT	2600	198811	199112		8-97120-778-0				
UBS16	4ZD1	MT	2800	198601		ISZ-01	8-94259-812-0				
UBS16	4ZD1	MT	2800	198701		ISZ-05	8-94426-401-3				
UBS55	4JB1	MT	2800	198701	199112	ISZ-04	8-94173-304-3	ISIR-1004	8-94312-676-0	ISIL-1004	8-94313-103-0
UBS55	4BD1-T	MT	2800	198701	199112	ISZ-04	8-94173-304-3	ISIR-1004	8-94312-676-0	ISIL-1004	8-94313-103-0
UBS55	4JB1-T	MT	2800	198701	199112	ISZ-04	8-94173-304-3	ISIR-1004	8-94312-676-0	ISIL-1004	8-94313-103-0
UBS55	4ZB1	MT	2800	198701	199112	ISZ-05	8-94426-401-3				
UBS55	4JB1 TBO	MT/AT	2800	198710	199112		8-97120-778-0				
UBS73	4JX1	MT/AT	3000	199805	200106	ISZ-06	8-97183-948-0				
UBS73	4JX1	MT/AT	3000	199805	200106	ISZ-06	8-97183-946-0				
UBS73	4JX1	MT/AT	3000	199805	200106	ISZ-06	8-97200-101-0				
UBS73	4JX1	MT/AT	3000	199805	200106	ISZ-06	8-97200-102-0				
UBS69	4JG2 TBO	MT/AT	3100	199112	199301	ISZ-04	8-94374-779-1	ISIR-1004	8-94312-676-0	ISIL-1004	8-94313-103-0
UBS69	4JG2 TBO	MT/AT	3100	199112	199805	ISZ-04	8-97063-622-0	ISIR-1004	8-94312-676-0	ISIL-1004	8-94313-103-0
UBS69	4JG2 TBO	MT/AT	3100	199112	199805	ISZ-04	8-97063-620-0	ISIR-1004	8-94312-676-0	ISIL-1004	8-94313-103-0
UBS69	4JG2 TBO	MT/AT	3100	199112	199301	ISZ-04	8-97063-621-0	ISIR-1004	8-94312-676-0	ISIL-1004	8-94313-103-0
UBS69	4JG2 TBO	MT/AT	3100	199302	199410	ISZ-04	8-97016-098-0	ISIR-1004	8-94312-676-0	ISIL-1004	8-94313-103-0
UBS69	4JG2 TBO	MT/AT	3100	199302	199311		8-97065-119-0				
UBS69	4JG2 TBO	MT/AT	3100	199312	199410	ISZ-04	8-97109-762-0	ISIR-1004	8-94312-676-0	ISIL-1004	8-94313-103-0
UBS69	4JG2 TBO	MT/AT	3100	199411	199504		8-97116-332-0				
UBS69	4JG2 TBO	MT/AT	3100	199411	199805	ISZ-06	8-97117-215-0				
UBS69	4JG2 TBO	MT/AT	3100	199505	199805		8-97116-332-0				
UBS69	4JG2 TBO	MT/AT	3100	199505	199805		8-97116-334-0				
UBS69	4JG2 TBO	MT/AT	3100	199505	199805		8-97116-334-0				
UBS69	4JG2 TBO	MT/AT	3100	199506	199805	ISZ-06	8-97117-244-0				
UBS25	6VD1	MT/AT	3200	199112	199301	ISZ-04	8-94374-779-1	ISIR-1004	8-94312-676-0	ISIL-1004	8-94313-103-0
UBS25	6VD1	MT/AT	3200	199112	199805	ISZ-04	8-97063-622-0	ISIR-1004	8-94312-676-0	ISIL-1004	8-94313-103-0
UBS25	6VD1	MT/AT	3200	199112	199805	ISZ-04	8-97063-620-0	ISIR-1004	8-94312-676-0	ISIL-1004	8-94313-103-0
UBS25	6VD1	4AT	3200	199112	199301	ISZ-04	8-97063-620-0	ISIR-1004	8-94312-676-0	ISIL-1004	8-94313-103-0
UBS25	6VD1	MT/AT	3200	199302	199410		8-97016-098-0				
UBS25	6VD1	4AT	3200	199302	199311	ISZ-04	8-97065-119-0	ISIR-1004	8-94312-676-0	ISIL-1004	8-94313-103-0
UBS25	6VD1	4AT	3200	199312	199410	ISZ-04	8-97109-762-0	ISIR-1004	8-94312-676-0	ISIL-1004	8-94313-103-0
UBS25	6VD1	MT/AT	3200	199411	199504		8-97116-332-0				
UBS25	6VD1	4AT	3200	199411	199805	ISZ-06	8-97117-215-0				
UBS25	6VD1	MT/AT	3200	199505			8-97116-332-0				
UBS25	6VD1	MT/AT	3200	199505			8-97116-334-0				
UBS25	6VD1	MT/AT	3200	199505			8-97116-334-0				
UBS26	6VE1	MT/AT	3500	199805	200106	ISZ-06	8-97183-948-0				
UBS26	6VE1	MT/AT	3500	199805	200106	ISZ-06	8-97183-946-0				
UBS26	6VE1	MT/AT	3500	199805	200106	ISZ-06	8-97200-101-0				
UBS26	6VE1	MT/AT	3500	199805	200106	ISZ-06	8-97200-102-0				
UBS26	6VE1	MT/AT	3500	199805	200106	ISZ-06	8-97200-101-0				
UBS26	6VE1	MT/AT	3500	199805	200106	ISZ-06	8-97200-102-0				
FASTER RODEO											
TFSIS 4WD	C223	5MT	2200	198806		ISZ-05	8-94423-037-1				
GEMINETT											
AP8	EA71	MT/AT	1600	198809	199403	SB-06	23221-GA234				
AP8	EA71	MT/AT	1600	198809	199403	SB-05	23221-GA244				
AP9 4WD	EA71	5MT	1600	198809	199403	SB-06	23221-GA234				
AP9 4WD	EA71	5MT	1600	198809	199403	SB-05	23221-GA244				
GEMINI											
JT190	4XC1	MT	1500	198501	198901	ISZ-03/ISZ-02	8-94158-130-2 /8-94108-634-3				
JT150	4XEC	MT	1500	198501	198901	ISZ-03/ISZ-02	8-94467-669-0 /8-94467-664-0				
JT190	4XC1	AT	1500	198501	198901	ISZ-03/ISZ-02	8-94158-131-2 /8-94108-635-3				
JT150	4XEC	AT	1500	198501	198901	ISZ-03/ISZ-02	8-94467-671-0 /8-94467-667-0				
JT600	4EC1	MT	1500	198501	198701	ISZ-03/ISZ-02	8-94405-227-2 /8-94108-634-3				

ISUZU

MODEL	ENGINE	AT/MT	CC	YEAR	YEAR	OUTER R/L	O.E No.R/L	INNER R	O.E No.IR	INNER L	O.E No.IL
JT600	4EC1	AT	1500	198501	198701	ISZ-03/ISZ-02	8-94405-228-2 /8-64108-635-3				
JT600	4EC1 TBO	MT	1500	198501	198701		8-94153-949-4				
JT600	4EC1 TBO	AT	1500	198501	198701		8-94153-951-4				
JT600	4EC1 TBO	AT	1500	198501	198701		8-94153-951-4				
JT150	4XC1	5MT	1500	198505	198704	ISZ-03/ISZ-02	8-94158-130-2 /8-94108-634-3				
JT150	4XC1	3AT	1500	198505	198704	ISZ-03/ISZ-02	8-94158-131-2 /8-94108-635-3				
JT600	4EC1	5MT	1500	198511	198704	ISZ-03/ISZ-02	8-94405-227-2 /8-94108-634-3				
JT600	4EC1	3AT	1500	198511	198704	ISZ-03/ISZ-02	8-94405-228-2 /8-64108-635-3				
JT600	4EC1 TBO	5MT	1500	198511	198704		8-94153-949-4				
JT600	4EC1 TBO	3AT	1500	198511	198704		8-94153-951-4				
JT150	4XC1 TBO	5MT	1500	198606	198702		8-94158-057-0				
JT150	4XC1 TBO	3AT	1500	198606	198702		8-94405-456-2				
NAVI5	4EC1	MT	1500	198701	198801	ISZ-03/ISZ-02	8-94467-670-0 /8-94467-664-0				
JT600	4EC1	AT	1500	198701	198801	ISZ-03/ISZ-02	8-94467-672-0 /8-94467-667-0				
NAVI5	4EC1	MT	1500	198701			8-94467-674-0				
NAVI5	4EC1	MT	1500	198701			8-94467-674-0				
JT600	4EC1 TBO	AT	1500	198701			8-94467-676-0				
JT150	4XC1 TBO	5MT	1500	198703	199002		8-94467-678-0				
JT150	4XC1 TBO	3AT	1500	198703	199002		8-94467-680-0				
JT150	4XC1	5MT	1500	198705	199002	ISZ-03/ISZ-02	8-94467-669-0 /8-94467-664-0				
JT150	4XC1	3AT	1500	198705	199002	ISZ-03/ISZ-02	8-94467-671-0 /8-94467-667-0				
JT600	4EC1	5MT	1500	198705	199002	ISZ-03/ISZ-02	8-94467-670-0 /8-94467-664-0				
JT600	4EC1	3AT	1500	198705	199002	ISZ-03/ISZ-02	8-94467-672-0 /8-94467-667-0				
JT600	4EC1 TBO	5MT	1500	198705	199002		8-94467-674-1				
JT600	4EC1 TBO	3AT	1500	198705	199002		8-94467-676-1				
NAVI5	4EC1	MT	1500	198801		ISZ-03/ISZ-02	8-94467-669-0 /8-94467-664-0				
JT600	4EC1	AT	1500	198801		ISZ-03/ISZ-02	8-94467-671-0 /8-94467-667-0				
JT151	4XC1	MT/AT	1500	199002	199309		8-94469-966-5				
JT151	4XC1	MT/AT	1500	199002	199309		8-94318-462-5				
MJ3	D15B	MT/AT	1500	199502	199510		8-86005-202-0				
MJ3	D15B	MT/AT	1500	199510			8-86009-186-0				
JT190	4XE1	5MT	1600	198803	199002	ISZ-03/ISZ-02	8-94467-669-0 /8-94467-664-0				
JT190	4XC1	3AT	1600	198803	199002	ISZ-03/ISZ-02	8-94467-671-0 /8-94467-667-0				
JT191	4XE1	5MT	1600	199002	199309		8-94466-437-3				
JT191	4XE1	5MT	1600	199002	199309		8-94479-624-3				
JT191	4XE1	4AT	1600	199002	199309		8-94386-027-2				
JT191	4XE1	4AT	1600	199002	199309		8-94386-028-2				
JT191 4WD	4XE1 TBO	5MT	1600	199002	199309		8-97039-505-0				
JT191 4WD	4XE1 TBO	5MT	1600	199002	199309		8-97039-506-0				
MJ1	ZC	MT/AT	1600	199309	199402		5-86005-201-0				
MJ1	ZC	MT/AT	1600	199309	199402		5-86005-203-0				
MJ2 4WD	ZC	MT/AT	1600	199309			5-86005-199-0				
MJ2 4WD	ZC	MT/AT	1600	199309			5-86005-200-0				
MJ1	ZC	MT/AT	1600	199402	199510		5-86005-202-0				
MJ1	ZC	MT/AT	1600	199402	199510		5-86005-204-0				
MJ1	ZC	MT/AT	1600	199510			5-86009-187-0				
MJ1	ZC	MT/AT	1600	199510			5-86009-188-0				
JT641	4EE1 TBO	MT/AT	1700	199002	199309		8-94386-027-2				
JT641	4EE1 TBO	MT/AT	1700	199002	199309		8-94386-028-2				
JT641	4EE1 TBO	4AT	1700	199101	199309		8-94386-027-2				
JT641	4EE1 TBO	MT/AT	1700	199101	199309		8-94386-028-2				
JT641 4WD	4EE1 TBO	5MT	1700	199109	199309		8-97039-506-0				
MU AMIGO											
UCS17D	4ZE1	5MT	2600	198904	199310	ISZ-04	8-94173-304-3	ISIR-1004	8-94312-676-0	ISIL-1004	8-94313-103-0
UCS55	4JB1	MT/AT	2800	199007	199510	ISZ-04	8-94173-304-3	ISIR-1004	8-94312-676-0	ISIL-1004	8-94313-103-0
UCS69	4JG2 TBO	MT/AT	3100	199310	199510	ISZ-04	8-94173-304-3	ISIR-1004	8-94312-676-0	ISIL-1004	8-94313-103-0
UCS69	4JG2 TBO	MT/AT	3100	199506	199510		8-97120-776-0				
UCS69	4JG2 TBO	MT/AT	3100	199511	199806		8-97120-776-0				
UCS69	4JG2 TBO	MT/AT	3100	199511	199806		8-97120-776-0				
UCS69	4JG2 TBO	MT/AT	3100	199511	199806		8-97120-776-0				
UCS69	4JG2	MT/AT	3100	199512	199806		8-97120-776-0				
MU WIZARD/RODEO											
USE73	4JX1	MT/AT	3000	199806	200209		8-97125-447-2				
UES25	6VD1	4AT	3200	199806	200209		8-97125-447-2				
PA NERO											
JT151F	4XC1	MT/AT	1500	199111	199309		8-94469-966-5				
JT151F	4XC1	MT/AT	1500	199111	199309		8-94318-462-5				
JT191	4XE1	5MT	1600	199004	199309		8-94466-437-3				
JT191	4XE1	5MT	1600	199004	199309		8-94479-624-3				
JT191	4XE1	4AT	1600	199004	199309		8-94386-027-2				
JT191	4XE1	4AT	1600	199004	199309		8-94386-208-2				
JT191	4XE1	4AT	1600	199004	199309		8-94386-028-2				
JT191 4WD	4XE1 TBO	5MT	1600	199103	199210		8-94466-437-3				
JT191 4WD	4XE1 TBO	5MT	1600	199103	199210		8-94479-624-3				
JT191	4XE1	4AT	1600	199111	199309		8-94386-027-2				
JT191 4WD	4XE1 TBO	5MT	1600	199111	199210		8-94469-966-5				
JT191 4WD	4XE1 TBO	5MT	1600	199111	199210		8-94318-462-5				
PIAZZA											
JT221	4XF1	5MT	1800	199107	199309		8-94466-437-3				
JT221	4XF1	5MT	1800	199107	199309		8-94479-624-3				
JT221	4XF1	4AT	1800	199107	199309		8-94386-027-2				

ISUZU

MODEL	ENGINE	AT/MT	CC	YEAR	YEAR	OUTER R/L	O.E No.R/L	INNER R	O.E No.IR	INNER L	O.E No.IL
JT221	4XF1	4AT	1800	199107	199309		8-94386-028-2				
VEHI CROSS											
UGS25	6VD1	4AT	3200	199703		ISZ-07	8-97139-093-0				
UGS25	6VD1	4AT	3200	199703		ISZ-07	8-97136-888-0				

KIA

MODEL	ENGINE	AT/MT	CC	YEAR	YEAR	OUTER	O.E No.R	INNER RH	O.E No.IR	INNER LH	O.E No.IL
AVELLA											
K36		MT	1300	199806	200001	MZ-01	KK370-22-510				
K36		MT	1500	199806	200001	MZ-04	KK388-22-510				
CLARUS											
K9BA	TE	MT/AT	1800	199601		MZ-101	0K9A4-25-500				
K9BA	FE	MT/AT	2000	199601		MZ-101	0K9B3-22-510				
		MT/AT	1800	200101	200312	KA-12					
CARNIVAL											
K55D	2.5 V6	MT/AT	2500	199901	200101	KA-16	0K552-C225-10A				
K55D	2.5 V6	MT/AT	2500	200101	200312	KA-16	0K552-C225-10A				
K55F	-	MT/AT	2900	199908	200010	KA-16A54	0K552-25-50XA				
K55F	2.9 TD	MT/AT	2900	199901	200101	KA-16	0K552-22-510				
K55F	2.9 CRDI	MT/AT	2900	200101	200312	KA-16	0K552-22-510A				
CERATO											
I	G4ED	MT	1600	200402		KA-CRTA44	49591-2F010		49592-2F000		49592-2F000
FESTIVA											
		MT	1300	199001	199312	MZ-16	B005-25-400				
OPTIMA											
-	-	MT/AT	2000	199901		KA-09	49510-38200				
		MT/AT	2000	200101		KA-11	49510-38500				
		MT/AT	2000	200101		KA-11A47					
PRIDE											
B3		MT	1100	199101		MZ-14	B002-25-400B				
B3		MT	1300	199101		MZ-14	B002-25-400B				
		MT	1300	199801		MZ-16	B005-25-600				
RIO											
K36		MT	1300	200001		MZ-04	0K30A-22-510				
K36		MT	1500	200001		MZ-04	KK388-22-510				
SEPHIA											
K28	-	MT/AT	1500	199502	199707	MZ-09A44	0K202-22-510				
K2A	-	MT/AT	1500	199901		MZ-09	0K203-22-510				
K2A		MT/AT	1500	199901		MZ-09	0K254-25-400				
K2A	-	MT/AT	1500	199901		MZ-09	0K203-22-520				
K20	-	MT/AT	1600	199301	199601	MZ-09	0K203-22-510				
K2A		MT/AT	1600	199901		MZ-09	0K216-25-40X				
		MT	1600	199811	200402	MZ-11	0K2N1-25-600				
		AT	1600	199811	200402	MZ-11	0K2N2-25-600				
		MT	1600	199811	200402	MZ-38	0K2N3-25-60X				
		MT	1600	199811	200402	MZ-38A44	0K2N3-25-60X				
		AT	1600	199811	200402	MZ-38	0K2N4-25-60X				
		AT	1600	199811	200402	MZ-38A44	0K2N4-25-60X				
		MT/AT	1800	199501		MZ-09A44	OK24T-25500				
SHUMA											
		MT	1600	199811	200402	MZ-11	0K2N1-25-600				
		AT	1600	199811	200402	MZ-11	0K2N2-25-600				
		MT	1600	199811	200402	MZ-38A44	0K2N3-25-60X				
		MT	1600	199811	200402	MZ-38	0K2N3-25-60X				
		AT	1600	199811	200402	MZ-38A44	0K2N4-25-60X				
		AT	1600	199811	200402	MZ-38	0K2N4-25-60X				
SORENTO											
FYWDT66	2,4L MPI	MT	2400	200205		KA-SR	49591-3E000	KAIR-SR	49592-3E110	KAIL-SR	49592-3E000
FYWD58E	D4CB TCI	AT/MT	2500	200205		KA-SR	49591-3E000	KAIR-SR	49592-3E110	KAIL-SR	49592-3E000
FYWDW6E	3,5L MPI	AT/MT	3500	200205		KA-SR	49591-3E000	KAIR-SR	49592-3E110	KAIL-SR	49592-3E000
SPECTRA											
BFD		AT	1500	199101		MZ-11	0K2N2-25-400				
BFD		AT	1500	199101		MZ-11	0K2N4-25-40X				
-	-	MT	1500			MZ-09	0K2A1-25-600				
		MT	1600	199811	200402	MZ-11	0K2N1-25-600				
		AT	1600	199811	200402	MZ-11	0K2N2-25-600				
		MT	1600	199811	200402	MZ-38A44	0K2N3-25-60X				
		MT	1600	199811	200402	MZ-38	0K2N3-25-60X				
		AT	1600	199811	200402	MZ-38A44	0K2N4-25-60X				
		AT	1600	199811	200402	MZ-38	0K2N4-25-60X				
SPORTAGE											
RUS		MT	2000	200001		MZ-807		MZID-5022	0K011-22-520	MZIP-5021	0K011-22-620
KOREA		MT	2000		200001	CVK-001		MZID-5022	0K011-22-520	MZIP-5021	0K011-22-620
TIMOR											
		MT/AT	1500	199602		MZ-09	0K2A1-25-600				
		MT/AT	1600	199501		MZ-09	0K2A1-25-600				
		MT/AT	1800	199501		MZ-09	0K2A1-25-600				
NEW SPORTAGE											
FQWDS8C 4WD		AT	2000	200408		KA-NSA48	49591-1F210	KAIR-50S	49592-1F500	KAIL-20S	49592-1F200
FQWDS86 4WD	TCI	MT	2000	200408		KA-NSA48	49591-1F210	KAIR-50S	49592-1F500	KAIL-20S	49592-1F200
FQWDS65 2WD		MT	2000	200408		KA-NS2A48	49591-1F410	KAIR-950	49592-1F800	KAIL-900	49592-1F400
FQWDS85 2WD	TCI	MT	2000	200408		KA-NS2A48	49591-1F410			KAIL-900	49592-1F400
FQWDH6C 4WD		AT	2700	200408		KA-NS2A48	49591-1F800	KAIR-950	49592-1F800	KAIL-900	49592-1F400
MAGENTIS											
GD	G6BW	AT	2500	200011		HY-SNTA47	49506-38640				

LAND ROVER

MODEL	ENGINE	AT/MT	CC	YEAR	YEAR	ASVA No.R	O.E No.R	ASVA No.L	O.E No.L
DEFENDER 90									
DEFENDER 90	2.5	MT	2495	198506	199706	LR-10A60	TDJ000010	LR-10A60	TDJ000010
DEFENDER 90	2.5 TDi	MT	2495	199006	199606	LR-10A60	TDJ000010	LR-10A60	TDJ000010
DEFENDER 90	2.5 TD5	MT	2495	199906		LR-10A60	TDJ000010	LR-10A60	TDJ000010
DEFENDER 90	2.5 D	MT	2495	198406	199006	LR-10A60	TDJ000010	LR-10A60	TDJ000010
DEFENDER 90	2.5 TDi	MT	2496	199606	199906	LR-10A60	TDJ000010	LR-10A60	TDJ000010
DEFENDER 90	3.5 V8	MT	3528	198506	199806	LR-10A60	TDJ000010	LR-10A60	TDJ000010
DEFENDER 90	4.0 i V8	MT	3974	199006		LR-10A60	TDJ000010	LR-10A60	TDJ000010
DEFENDER 110									
DEFENDER 110	2.5	MT	2495	198506		LR-10A60	TDJ000010	LR-10A60	TDJ000010
DEFENDER 110	2.5 TDi	MT	2495	199006		LR-10A60	TDJ000010	LR-10A60	TDJ000010
DEFENDER 110	2.5 TD5	MT	2495	199906		LR-10A60	TDJ000010	LR-10A60	TDJ000010
DEFENDER 110	2.5 D	MT	2495	198506		LR-10A60	TDJ000010	LR-10A60	TDJ000010
DEFENDER 110	2.5 TDi	MT	2496	199506	199806	LR-10A60	TDJ000010	LR-10A60	TDJ000010
DEFENDER 110	3.5 V8	MT	3528	198506		LR-10A60	TDJ000010	LR-10A60	TDJ000010
DEFENDER 130									
DEFENDER 130	2.5 TDi	MT	2495	199006		LR-10A60	TDJ000010	LR-10A60	TDJ000010
DEFENDER 130	2.5 TD5	MT	2495	199906		LR-10A60	TDJ000010	LR-10A60	TDJ000010
DISCOVERY I									
DISCOVERY I	2.5 TDi (3 dr)	AT/MT	2494	198906	199806	LR-10A60	TDJ000010	LR-10A60	TDJ000010
DISCOVERY I	2.5 TDi (5 dr)	AT/MT	2494	199006	199806	LR-10A60	TDJ000010	LR-10A60	TDJ000010
DISCOVERY I	3.5 i V8 (5 dr)	AT/MT	3532	199006	199806	LR-10A60	TDJ000010	LR-10A60	TDJ000010
DISCOVERY I	3.5 i V8 (3 dr)	AT/MT	3532	198906	199806	LR-10A60	TDJ000010	LR-10A60	TDJ000010
DISCOVERY I	3.5 i V8 (3 dr)	AT/MT	3532	198906	199806	LR-10A60	TDJ000010	LR-10A60	TDJ000010
DISCOVERY I	3.5 i V8 (5 dr)	AT/MT	3532	199006	199806	LR-10A60	TDJ000010	LR-10A60	TDJ000010
DISCOVERY I	3.9 i V8 (5 dr)	AT/MT	3947	199406	199806	LR-10A60	TDJ000010	LR-10A60	TDJ000010
RANGE ROVER									
RANGE ROVER	2.4 Diesel	MT	2400	198606	199006	LR-08A60	RTC6811	LR-08A60	RTC6811
RANGE ROVER	3.5 Vogue	MT	3532	198106	199006	LR-08A60	RTC6811	LR-08A60	RTC6811
RANGE ROVER	3.5 Vogue	MT	3532	198506	199006	LR-08A60	RTC6811	LR-08A60	RTC6811
RANGE ROVER	3.5	MT	3532	198706	199006	LR-08A60	RTC6811	LR-08A60	RTC6811
RANGE ROVER	3.9	MT	3947	198806	199406	LR-10A60	TDJ000010	LR-10A60	TDJ000010
RANGE ROVER	3.9 KAT	MT	3947	198806	199406	LR-10A60	TDJ000010	LR-10A60	TDJ000010
RANGE ROVER	3.9 Vogue SEI	MT	3947	198806	199406	LR-10A60	TDJ000010	LR-10A60	TDJ000010
RANGE ROVER	3.9	MT	3947	198806	199406	LR-08A60	RTC6811	LR-08A60	RTC6811
RANGE ROVER	3.9 KAT	MT	3947	198806	199406	LR-08A60	RTC6811	LR-08A60	RTC6811
RANGE ROVER	3.9 Vogue SEI	MT	3947	198806	199406	LR-08A60	RTC6811	LR-08A60	RTC6811
RANGE ROVER	3.9 V8	MT	3947	199106	199406	LR-10A60	TDJ000010	LR-10A60	TDJ000010
RANGE ROVER	3.9 V8	MT	3947	199106	199406	LR-08A60	RTC6811	LR-08A60	RTC6811
RANGE ROVER	4.3 Vogue LSE	MT	4273	199206	199406	LR-10A60	TDJ000010	LR-10A60	TDJ000010
RANGE ROVER	4.3 Vogue LSE	MT	4273	199206	199406	LR-08A60	RTC6811	LR-08A60	RTC6811
ROVER 800									
ROVER 800	820 TI TURBO	AT/MT	2000	199002	199903	LR-800A60	GCV1036	LR-800A60	GCV 1037

MAZDA

MODEL	ENGINE	AT/MT	CC	YEAR	YEAR	OUTER	O.E No.R	INNER R	O.E No.IR	INNER L	O.E No.IL
ATENZA/MAZDA 6											
GG		MT	1800	200205	200610	MZ-44A44	GD62-25-50X	MZIR-GG	GD38-22-520	MZIL-GG	GD36-22-620
GG		MT	1800	200610	200701	MZ-44A44	GD62-25-50XA	MZIR-GG	GD62-22-520	MZIL-GG	GD36-22-620A
GG		MT	1800	200701	200712	MZ-44A44	GD62-25-50XA	MZIR-GG	GD62-22-520A	MZIL-GG	GD36-22-620A
GG	LF-DE	MT	2000	200205	200610	MZ-44A44	GD62-25-50X	MZIR-GG	GD38-22-520	MZIL-GG	GD36-22-620
GG	LF-DE	MT	2000	200610	200701	MZ-44A44	GD62-25-50XA	MZIR-GG	GD62-22-520	MZIL-GG	GD36-22-620A
GG	LF-DE	MT	2000	200701	200712	MZ-44A44	GD62-25-50XA	MZIR-GG	GD62-22-520A	MZIL-GG	GD36-22-620A
GGEP	LF-DE	4AT/F	2000	200205	200712	MZ-44A44	GF09-25-50X	MZIR-M6A	GF09-22-520	MZIL-M6A	GF09-22-620
GGEP	LF-DE	4AT/F	2000	200205	200712	MZ-44A44	GP18-25-50XA	MZIR-M6A	GF09-22-520	MZIL-M6A	GF09-22-620
GGES	LF-DE	4AT/F	2000	200205	200712	MZ-44A44	GF09-25-50X		GP06-22-520	MZIL-M6A2	GP06-22-620
GGES	LF-DE	4AT/F	2000	200205	200712	MZ-44A44	GP18-25-50XA		GP06-22-520	MZIL-M6A2	GP06-22-620B
GG	L3-VE	MT	2300	200205	200712	MZ-44A44	GD62-25-50XA	MZIR-GG	GD62-22-520A	MZIL-GG	GD36-22-620A
GG3P	L3-VE	4AT/F	2300	200205	200712	MZ-44A44	GF09-25-50X	MZIR-M6A	GF09-22-520	MZIL-M6A	GF09-22-620
GG3P	L3-VE	4AT/F	2300	200307	200712	MZ-44A44	GP18-25-50XA		GP06-22-520	MZIL-M6A2	GP06-22-620
GG3P	L3-VE	4AT/F	2300	200307	200712	MZ-44A44	GF09-25-50X		GP06-22-520	MZIL-M6A2	GP06-22-620B
GG3P	L3-VE	4AT/F	2300	200205	200712	MZ-44A44	GP18-25-50XA	MZIR-M6A	GF09-22-520	MZIL-M6A	GF09-22-620
ATENZA SPORT											
GYEW	LF-DE	4AT/F	2000	200206		MZ-44A44	GF09-25-50X	MZIR-M6A	GF09-22-520	MZIL-M6A	GF09-22-620
GYEW	LF-DE	4AT/F	2000	200206		MZ-44A44	GP18-25-50XA	MZIR-M6A	GF09-22-520	MZIL-M6A	GF09-22-620
GY3W	L3-VE	4AT/F	2300	200206		MZ-44A44	GF09-25-50X	MZIR-M6A	GF09-22-520	MZIL-M6A	GF09-22-620
GY3W	L3-VE	4AT/F	2300	200206		MZ-44A44	GP18-25-50XA	MZIR-M6A	GF09-22-520	MZIL-M6A	GF09-22-620
GY3W 4WD	L3-VE	5AT/F	2300	200208		MZ-44A44	GF09-25-50X	MZIR-M6A	GF09-22-520	MZIL-M6A	GF09-22-620
GY3W 4WD	L3-VE	5AT/F	2300	200208		MZ-44A44	GP18-25-50XA	MZIR-M6A	GF09-22-520	MZIL-M6A	GF09-22-620
AZ OFFROAD											
JM23W4WD	K6A TBO	MT/AT	660	199810			1A00-33-111				
AZ WAGON											
CY21S	F6A	AT	660	199407	199806	SZ-10	1A61-25-400				
CY21S	F6A	AT	660	199407	199806	SZ-03	1A63-25-400				
CY21S	F6A	MT	660	199407	199806	SZ-07	1A60-25-400				
CY21S	F6A	MT	660	199407	199806	SZ-10	1A60-25-400				
CY21S	F6A	MT	660	199407	199806	SZ-14	A083-25-020				
CY21S	F6A	MT	660	199407	199806	SZ-03	A083-25-020				
CZ21S4WD	F6A	AT	660	199407	199806	SZ-07	A033-25-020				
CZ21S4WD	F6A	AT	660	199407	199806	SZ-15	A051-25-500A				
CZ21S4WD	F6A	MT	660	199407	199806	SZ-03	A011-25-020C				
CZ21S4WD	F6A	MT	660	199407	199806	SZ-14	A027-25-020				
CZ21S4WD	F6A	MT	660	199407	199806	SZ-14	A027-25-020				
CZ21S4WD	F6A	MT	660	199407	199806	SZ-14	A092-25-020				
CY21S	F6A TBO	AT	660	199510	199806	SZ-07	A033-25-020				
CY21S	F6A TBO	AT	660	199510	199806	SZ-15	A051-25-500A				
CY21S	F6A TBO	MT	660	199510	199806	SZ-01	A065-25-020				
CY21S	F6A TBO	MT	660	199510	199806	SZ-15	A089-25-020				
CZ21S4WD	F6A TBO	AT	660	199510	199806	SZ-07	A033-25-020				
CZ21S4WD	F6A TBO	AT	660	199510	199806	SZ-15	A051-25-500A				
CZ21S4WD	F6A TBO	MT	660	199510	199806	SZ-01	A065-25-020A				
CZ21S4WD	F6A TBO	MT	660	199510	199806	SZ-15	A089-25-020				
CY51S	K6A	AT	660	199704	199809	SZ-03	1A63-25-400A				
CY51S	K6A	MT	660	199704	199809	SZ-14	A083-25-020A				
CY51S	K6A	MT	660	199704	199809	SZ-03	A083-25-020A				
CY51S	K6A TBO	AT	660	199704	199809	SZ-07	A033-25-020A				
CY51S	K6A TBO	AT	660	199704	199809	SZ-07	A051-25-500A				
CY51S	K6A TBO	AT	660	199704	199809	SZ-15	A051-25-500A				
CY51S	K6A	MT	660	199704	199809	SZ-01	A065-25-020A				
CY51S	K6A TBO	MT	660	199704	199809	SZ-01	A089-25-020				
CY51S	K6A TBO	MT	660	199704	199809	SZ-15	A089-25-020				
CZ51S4WD	K6A	AT	660	199704	199809	SZ-07	A033-25-020A				
CZ51S4WD	K6A	AT	660	199704	199809	SZ-07	A051-25-500A				
CZ51S4WD	K6A	AT	660	199704	199809	SZ-15	A051-25-500A				
CZ51S4WD	K6A	MT	660	199704	199809	SZ-14	A092-25-020				
CZ51S4WD	K6A TBO	AT	660	199704	199809	SZ-07	A033-25-020A				
CZ51S4WD	K6A TBO	AT	660	199704	199809	SZ-07	A051-25-500A				
CZ51S4WD	K6A TBO	AT	660	199704	199809	SZ-07	A051-25-500A				
CZ51S4WD	K6A TBO	AT	660	199704	199809	SZ-15	A051-25-500A				
CZ51S4WD	K6A TBO	MT	660	199704	199809	SZ-01	A065-25-020				
CZ51S4WD	K6A TBO	MT	660	199704	199809	SZ-01	A089-25-020				
CZ51S4WD	K6A TBO	MT	660	199704	199809	SZ-15	A089-25-020				
AZ-3											
EC5SA	B5	MT/AT	1500	199106	199801	MZ-24	F025-25-400B	MZIU-507	F024-22-520	MZIU-507	F024-22-520
EC5SA	B5	5MT	1500	199106	199801		F030-25-400B	MZIU-507	F024-22-520	MZIU-507	F024-22-520
EC5SA	B5	4AT	1500	199106	199801	MZ-24A44	F029-25-400A	MZIU-507	F024-22-520	MZIU-507	F024-22-520
ECPSA	K8	5MT	1800	199309	199801	MZ-26	GA06-25-500				
ECPSA	K8	5MT	1800	199309	199801	MZ-26	GA07-25-50X				
ECPSA	K8	4AT	1800	199309	199801	MZ-26	FF01-25-500				
ECPSA	K8	4AT	1800	199309	199801	MZ-26	FF02-25-50X				
B2200											
UF 4WD		MT/AT	2200	199603		FD-115	MD09-22-510				
UN 4WD		MT/AT	2200	199902		FD-115	MD09-22-510				
B2500											
UF 4WD		MT/AT	2200	199603		FD-115	MD09-22-510				
UN 4WD		MT/AT	2200	199902		FD-115	MD09-22-510				
B2600											
UF 4WD		MT/AT	2200	199603		FD-115	MD09-22-510				
UN 4WD		MT/AT	2200	199902		FD-115	MD09-22-510				
BONGO BRAWNY TRUCK											

MAZDA

MODEL	ENGINE	AT/MT	CC	YEAR	YEAR	OUTER	O.E No.R	INNER R	O.E No.IR	INNER L	O.E No.IL
SK2 4 WD	R2	5MT	2200	199907		MZ-35	MD15-25-500A				
SK5 4 WD	WL	5MT	2500	199907		MZ-35	MD15-25-500A				
BONGO BRAWNY VAN											
SK5 4 WD	WL	MT/AT	2500	199907		MZ-35A44	MD16-25-50XA				
SK5 4 WD	WL	MT/AT	2500	199907		MZ-35	MD15-25-500A				
BONGO FRIENDEE/FREEDA											
SGL5 4WD	WL	MT/AT	2500	199505	199611	MZ-FRDA44	MD04-25-500A				
SGLR 4WD	WL	MT/AT	2500	199505	199611	MZ-FRDA44	MD04-25-500A				
BONGO J80/BONGO J100											
SS88M 4WD	F8	5MT	1800	198410	199703	MZ-35	M025-25-500A				
SE88M 4WD	F8	5MT	1800	198509	199703	MZ-35	M025-25-500A				
SS88M 4WD	F8	5MT	1800	199508	199703	MZ-35	M025-25-500B				
SSE8R 4WD	FE	5MT	2000	198611	199509	MZ-35	M025-25-500A				
SSF8R 4WD	RF TBO	MT/AT	2000	198901	199508	MZ-35	M025-25-500A				
SSF8R 4WD	RF	MT/AT	2000	199508	199703	MZ-35	M025-25-500B				
SS28 4WD	R2	5MT	2200	198508	199703	MZ-35	M025-25-500B				
SS28 4WD	R2	MT/AT	2200	198611	199508	MZ-35	MD25-25-500A				
SE28 4WD	R2	5MT	2200	198709	199508	MZ-35	M025-25-500A				
SR2AM 4WD	R2	5MT	2200	198709	199703	MZ-35	M025-25-500A				
SD29M 4WD	R2	5MT	2200	198709	199703	MZ-35	M025-25-500A				
SD2AM 4WD	R2	5MT	2200	199008	199703	MZ-35	M025-25-500A				
SD29M 4WD	R2	5MT	2200	199704	199703	MZ-35	MD10-25-500				
SD2AM 4WD	R2	5MT	2200	199704	199703	MZ-35	MD10-25-500				
SD5 4WD	WL	5MT	2500	199704	199907	MZ-35	MD10-25-500				
BONGO TRUCK											
SK82 4WD	F8-E	5MT	1800	199906		MZ-35	MD13-25-500A				
SK22 4WD	R2	MT/AT	2200	199906		MZ-35	MD13-25-500A				
BONGO VAN											
SK82 4WD	F8-E	MT/AT	1600	199906		MZ-35A44	MD14-25-50XA				
SK82 4WD	F8-E	MT/AT	1600	199906		MZ-35	MD13-25-500A				
SK22 4WD	R2	MT/AT	2200	199906		MZ-35A44	MD14-25-50XA				
SK22 4WD	R2	MT/AT	2200	199906		MZ-35	MD13-25-500A				
626											
GF		MT/AT	1900	199705		MZ-38A44	GD15-22-510				
GD	FE 12V	MT/AT	2000	198707	199205	MZ-10A44	G064-25-600A				
GD	FE 16V	MT/AT	2000	198707	199205	MZ-10A44	G064-25-600A				
GD	D RF-N	MT/AT	2000	198707	199205	MZ-10A44	G064-25-600A				
GD	F2 12V	MT/AT	2200	198707	199205	MZ-10A44	G064-25-600A				
GE	KL 24V	MT/AT	2500	199108	199704	MZ-10A44	G064-25-600A				
ALL TURBO	V6	MT/AT	3000	199006	199206	MZ-10A90	G570-22-510B				
CAPELLA/626/TELSTER											
GC6P	F6	MT/AT	1600	198201	198301	MZ-02	G001-25-500A/B				
GC6P	F6	AT	1600	198301	198701	MZ-02	G021-25-500A				
GD6P	B6	MT/AT	1600	198701	199101	MZ-05	G013-25-500				
GD6P	B6	AT	1600	198701	199110	MZ-07	G024-25-500				
GD6P	B6	5MT	1600	198707	199110	MZ-05	GO13-25-500A				
GC8P	F8	MT/AT	1800	198201	198701	MZ-02	G005-25-500				
GC8P	F8	MT/AT	1800	198201	198701	MZ-02	G011-25-500				
GC8P	F8	AT	1800	198301	198701	MZ-02	G021-25-500A				
GD8PS	F8	AT	1800	198701	199101	MZ-07	G024-25-500				
GD8PS	F8	5MT	1800	198705	199110	MZ-05	G013-25-500A				
GD8PS	F8	5MT	1800	198705	199110	MZ-06A90	G034-25-500A				
GD8PS	F8	4AT	1800	198705	199110	MZ-07	G023-25-500				
GD8PS	F8	4AT	1800	198705	199110	MZ-06A90	G044-25-500				
GD8A B 4WS	F8	5MT	1800	198802	199110	MZ-05	G013-25-500A				
GD8A B 4WS	F8	5MT	1800	198802	199110	MZ-06A90	G034-25-500A				
GD8A B 4WS	F8	4AT	1800	198802	199110	MZ-07	G023-25-500				
GD8A B 4WS	F8	4AT	1800	198802	199110	MZ-06A90	G044-25-500				
GD8R 4WD	F8	5MT	1800	198904	199110	MZ-08	G072-25-500				
GD8R 4WD	F8	5MT	1800	198904	199110	MZ-20	G074-25-500				
GD8R 4WD	F8	5MT	1800	198904	199110		G073-25-50X				
GD8R 4WD	F8	4AT	1800	198904	199110	MZ-20	G074-25-500				
GD8R 4WD	F8	4AT	1800	198904	199110	MZ-20	G075-25-50X				
GE8P	K8	MT	1800	199110		MZ-18	G568-25-500A	MZ-IPMT-03	G568-22-520	MZ-IDMT-02	G568-22-620
GE8P	K8	AT	1800	199110		MZ-18	G560-25-500A	MZ-IPAT-01	G560-22-520	MZ-IDAT-04	G560-22-620
CG2PP	FP	MT/AT	1800	199407	199708	MZ-18	G037-25-500				
CG2PP	FP	5MT	1800	199407	199708	MZ-18	G568-25-500B	MZ-IPMT-03	G568-22-520	MZ-IDMT-02	G568-22-620
CG2PP	FP	MT/AT	1800	199407	199708	MZ-18A44	G037-25-50X				
CG2PP	FP	5MT	1800	199407	199708	MZ-18A44	G568-25-50XA	MZ-IPMT-03	G568-22-520	MZ-IDMT-02	G568-22-620
CG2PP	FP	4AT	1800	199407	199708	MZ-18	G047-25-500	MZ-IPAT-01	G560-22-520	MZ-IDAT-04	G560-22-620
CG2PP	FP	4AT	1800	199407	199708	MZ-18A44	G047-25-50X	MZ-IPAT-01	G560-22-520	MZ-IDAT-04	G560-22-620
CG2PP	FP	5MT	1800	199408	199708	MZ-18A44	G047-25-50XA	MZ-IPMT-03	G568-22-520	MZ-IDMT-02	G568-22-620
CG2PP	FP	5MT	1800	199408	199708	MZ-18A44	G047-22-510A	MZ-IPMT-03	G568-22-520	MZ-IDMT-02	G568-22-620
CG2PP	FP	5MT	1800	199408	199708	MZ-18	G047-25-500A	MZ-IPMT-03	G568-22-520	MZ-IDMT-02	G568-22-620
CG2PP	FP	4AT	1800	199408	199708	MZ-18A44	G037-22-510	MZ-IPAT-01	G560-22-520	MZ-IDAT-04	G560-22-620
GF8P	FP	5MT	1800	199708	199908		GD15-25-50X				
GF8P	FP	4AT	1800	199708	199908	MZ-39A44	GG01-25-50X				
GF8P	FP-DE	5MT	1800	199708	199812	MZ-37A44	GD17-25-50XB	MZIR-GF	GD17-22-520	MZIL-GF	GD17-22-620
GF8P	FP-DE	4AT	1800	199708	199909	MZ-39A44	GG09-25-50XD				
GF	GE9E	MT/AT	1800	199801	200205	MZ-37	GD17-25-500	MZIR-GF	GD17-22-520	MZIL-GF	GD17-22-620
GF	GE9E	MT/AT	1800	199801	200205	MZ-37	GD17-25-500A	MZIR-GF	GD17-22-520	MZIL-GF	GD17-22-620
GF	GE9E	MT/AT	1800	199801	200205	MZ-37	GD17-25-500B	MZIR-GF	GD17-22-520	MZIL-GF	GD17-22-620
GF8P	FP-DE	MT/AT	1800	199801	200205	MZ-37A44	GD17-25-50X	MZIR-GF	GD17-22-520	MZIL-GF	GD17-22-620
GF8P	FP-DE	MT/AT	1800	199801	200205	MZ-37A44	GD17-25-50XA	MZIR-GF	GD17-22-520	MZIL-GF	GD17-22-620

MAZDA

MODEL	ENGINE	AT/MT	CC	YEAR	YEAR	OUTER	O.E No.R	INNER R	O.E No.IR	INNER L	O.E No.IL
GF8P	FP-DE	MT/AT	1800	199801	200205	MZ-37A44	GD17-25-50XB	MZIR-GF	GD17-22-520	MZIL-GF	GD17-22-620
GF8P	FP-DE	5MT	1800	199812	200205	MZ-37A44	GD17-25-50XB	MZIR-GF	GD17-22-520	MZIL-GF	GD17-22-620
GF8P	FP-DE	4AT	1800	200001	200205	MZ-39A44	GG09-25-50XE				
GCEP	FE	MT/AT	2000	198201	198701	MZ-03	G002-25-500A				
GCEP	FE	MT/AT	2000	198201	198701	MZ-03	G002-25-500B				
GCEP	FE	MT/AT	2000	198201	198701	MZ-03	G006-25-500				
GCEP	FE	MT/AT	2000	198201	198701	MZ-03	G012-25-500A				
GCEP	FE	MT/AT	2000	198201	198701	MZ-03	G012-25-500B				
GCEP	FE	MT/AT	2000	198201	198701	MZ-03	G022-25-500A				
GCEP	FE	MT/AT	2000	198201	198701	MZ-03	G022-25-500B				
GCF	RF	MT/AT	2000	198201	198701	MZ-03	G002-25-500A				
GCF	RF	MT/AT	2000	198201	198701	MZ-03	G002-25-500B				
GCF	RF	MT/AT	2000	198201	198701	MZ-03	G006-25-500				
GCF	RF	MT/AT	2000	198201	198701	MZ-03	G012-25-500A				
GCF	RF	MT/AT	2000	198201	198701	MZ-03	G012-25-500B				
GCF	RF	MT/AT	2000	198201	198701	MZ-03	G022-25-500A				
GCF	RF	MT/AT	2000	198201	198701	MZ-03	G022-25-500B				
GDEPS	FE	MT	2000	198701	199101	MZ-06	G033-25-500	MZIP-503	G013-22-520	MZID-504	G013-22-620
GDEPS	FE	MT	2000	198701	199110	MZ-06A90	G034-25-500A				
GDEPS	FE	MT	2000	198701	199110	MZ-06A90	G034-25-500A				
GDEPS	FE	MT	2000	198701	199110	MZ-06A90	G034-25-500A				
GDEPS	FE	AT	2000	198701	199101	MZ-06	G043-25-500				
GDEPS	FE	MT/AT	2000	198705	199110	MZ-06A90	GA44-25-500A	MZIP-511	G023-22-520	MZID-512	G023-22620
GDEPS	FE	4AT	2000	198705	199110	MZ-06	G044-25-500A				
GDEAB 4WS	FE	5MT	2000	198705	199110	MZ-06	G034-25-500				
GDEAB 4WS	FE	4AT	2000	198705	199110	MZ-06	G044-25-500A				
GDEAB 4WS	FE	MT/AT	2000	198705	199110	MZ-06A90	GA44-25-500A				
GDEPS	FE	5MT	2000	198705	199110	MZ-06	G034-25-500	MZIP-503	G013-22-520	MZID-504	G013-22-620
GDFP	RF	5MT	2000	198707	199110	MZ-06	G034-25-500	MZIP-503	G013-22-520	MZID-504	G013-22-620
GDFP	RF	5MT	2000	198707	199110	MZ-06	G044-25-500	MZIP-503	G013-22-520	MZID-504	G013-22-620
GDER 4WD	FE	5MT	2000	198904	199110		G071-25-500A				
GDER 4WD	FE	5MT	2000	198904	199110	MZ-20	G074-25-500				
GDER 4WD	FE	5MT	2000	198904	199110		G073-25-50X				
GDEPS	FE	4AT	2000	198904	199110	MZ-20	G074-25-500				
GDER 4WD	FE	4AT	2000	198904	199110	MZ-20	G075-25-50X				
GDER 4WD	FE	4AT	2000	198904	199110	MZ-20	G074-25-500				
GEEP	KF	MT	2000	199110		MZ-18	G568-25-500A	MZ-IPMT-03	G568-22-520	MZ-IDMT-02	G568-22-620
GEEP	KF	AT	2000	199110		MZ-18	G560-25-500A	MZ-IPAT-01	G560-22-520	MZ-IDAT-04	G560-22-620
GESR 4WD	FS	4AT	2000	199110	199407	MZ-31	G077-25-50X				
GESR 4WD	FS	4AT	2000	199110	199407	MZ-31	G076-25-500				
GEFP	RF	5MT	2000	199204	199407	MZ-18	G572-25-500	MZ-IPMT-03	G568-22-520	MZ-IDMT-02	G568-22-620
GEFP	RF	5MT	2000	199204	199407	MZ-18A44	G572-25-50X	MZ-IPMT-03	G568-22-520	MZ-IDMT-02	G568-22-620
GEFP	RF	4AT	2000	199204	199510	MZ-18	G576-25-500	MZ-IPAT-01	G560-22-520	MZ-IDAT-04	G560-22-620
GEFP	RF	4AT	2000	199204	199510	MZ-18A44	G576-25-50X	MZ-IPAT-01	G560-22-520	MZ-IDAT-04	G560-22-620
CG2SP	FS	MT/AT	2000	199407	199708	MZ-18	G037-25-500				
CG2SP	FS	5MT	2000	199407	199708	MZ-18	G568-25-500B				
CG2SP	FS	MT/AT	2000	199407	199708	MZ-18A44	G037-25-50X				
CG2SP	FS	5MT	2000	199407	199708	MZ-18A44	G568-25-50XA				
CG2SP	FS	4AT	2000	199407	199708	MZ-18	G047-25-500				
CG2SP	FS	4AT	2000	199407	199708	MZ-18A44	G047-25-50X				
ACG2SR 4WD	FS	5MT	2000	199407	199708	MZ-31	G076-25-500				
ACG2SR 4WD	FS	5MT	2000	199407	199708	MZ-31	G077-25-50X				
ACG2SR 4WD	FS	4AT	2000	199407	199708	MZ-31	G076-25-500				
ACG2SR 4WD	FS	4AT	2000	199407	199708	MZ-31	G077-25-50X				
CG2SP	FS	5MT	2000	199408	199708	MZ-18A44	G047-25-50XA				
CG2SP	FS	5MT	2000	199408	199708	MZ-18	G047-25-500A				
CG2SP	FS-DE	5MT	2000	199408	199708	MZ-18A44	G047-22-510A				
CG2SP	FS-DE	5MT	2000	199408	199708	MZ-18A44	G037-22-510				
ACG2SR 4WD	FS-DE	5MT	2000	199408	199708	MZ-31	G077-25-50XB				
CG2SR 4WD	FS-DE	5MT	2000	199408	199708	MZ-31	G077-22-510A				
CG2SR 4WD	FS-DE	5MT	2000	199408	199708	MZ-31	G076-25-500				
CG2SR 4WD	FS-DE	5MT	2000	199408	199708	MZ-31	G076-22-510A				
CG2SR 4WD	FS-DE	4AT	2000	199408	199708	MZ-31	G077-25-50XB				
CG2SR 4WD	FS-DE	4AT	2000	199408	199708	MZ-31	G077-22-510A				
CG2SR 4WD	FS-DE	4AT	2000	199408	199708	MZ-31	G076-25-500C				
CG2SR 4WD	FS-DE	4AT	2000	199408	199708	MZ-31	G076-22-510A				
CG2 4WD	FS-DE	5MT	2000	199408	199708	MZ-31	G077-25-50XB				
CG2SR 4WD	FS-DE	4AT	2000	199408	199708	MZ-31	G076-25-500C				
CG2SR 4WD	FS-DE	4AT	2000	199408	199708	MZ-31	G076-22-510A				
GFEP	FS	5MT	2000	199708	199908	MZ-37A44	GD17-25-50X	MZIR-GF	GD17-22-520	MZIL-GF	GD17-22-620
GFEP	FS	4AT	2000	199708	199908	MZ-18A44	GJ01-25-50X				
GFER 4WD	FS	MT/AT	2000	199708	199908	MZ-38A44	GD21-25-50X				
GFEP	FS-ZE	5MT	2000	199708	199909	MZ-37A44	GD17-25-50XB	MZIR-GF	GD17-22-520	MZIL-GF	GD17-22-620
GFEP	FS-ZE	4AT	2000	199708	199909	MZ-18A44	GA14-25-50XA				
GFER 4WD	FS-DE	5MT	2000	199708	199909	MZ-38A44	GD21-25-50X				
GFER 4WD	FS-DE	4AT	2000	199708	200205	MZ-38A44	GD21-25-50X				
GFEP	FS-ZE	4AT	2000	199909	200205	MZ-39A44	GG09-25-50XE				
626 USA		AT	2500	199206		MZ-056A44	G572-22-510				

CAPELLA/TELSTER CARGO/TELSTER WAGON

GV6V	B6	5MT	1600	198801		MZ-22	G016-25-500C				
GV6V	B6	4AT	1600	198801		MZ-22	G026-25-500C				
GV8W	F8	5MT	1800	198801	199207	MZ-05	G013-25-500				
GV8W	F8	5MT	1800	198801		MZ-06	G034-25-50X				
GV8W	F8	4AT	1800	198801	199207	MZ-07	G023-25-500				
GV8W	F8	4AT	1800	198801		MZ-06	G044-25-50X				
GV8W	F8	5MT	1800	199208	199410	MZ-06	G034-25-500				

MAZDA

MODEL	ENGINE	AT/MT	CC	YEAR	YEAR	OUTER	O.E No.R	INNER R	O.E No.IR	INNER L	O.E No.IL
GV8W	F8	4AT	1800	199208	199410	MZ-06	G044-25-500				
GW8W	FP-DE	5MT	1800	199710	200205	MZ-37A44	GD17-25-50X	MZIR-GF	GD17-22-520	MZIL-GF	GD17-22-620
GW8W	FP-DE	4AT	1800	199710	200205	MZ-39A44	GG01-25-50X				
GVFV	RF	5MT	2000	198801		MZ-22	G016-25-500C				
GVFW	RF	5MT	2000	198905	199410	MZ-06	G034-25-500				
GVFW	RF	5MT	2000	198905	199410	MZ-06	G034-25-50X				
GVFW	RF	4AT	2000	198905	199410	MZ-06	G044-25-500				
GVFW	RF	4AT	2000	198905	199410	MZ-06	G044-25-50X				
GVER 4WD	FE	5MT	2000	199008	199410	MZ-08	G072-25-500				
GVER 4WD	FE	5MT	2000	199008	199410		G073-25-50X				
GVER 4WD	FE	4AT	2000	199008	199410	MZ-20	G075-25-50X				
GVER 4WD	FE	4AT	2000	199008	199410	MZ-20	G074-25-500				
GVFR 4WD	RFDSC	4AT	2000	199208	199410	MZ-20	G074-25-500				
GVFR 4WD	RFDSC	4AT	2000	199208	199410	MZ-20	G075-25-50X				
GWEW	FS-DE	4AT	2000	199710	199908	MZ-18A44	GJ01-25-50XA				
GWER 4WD	FS-DE	MT/AT	2000	199710	199908	MZ-38A44	GD21-25-50X				
GFFP	RF	4AT	2000	199807	199909	MZ-18A44	GA14-25-50XA				
GW5R 4WD	KL-ZE	MT/AT	2500	199711	200205	MZ-38A44	GD21-25-50X				
CAPELLA/626/TELSTER											
GE5PF	KL	4AT	2500	199204	199601	MZ-10	G564-25-500A				
GE5P	KL	4AT	2500	199204	199601	MZ-10A44	G564-25-50X				
CAROL											
AA5PA	F5B	AT	550	198910	199002	SZ-03	A007-25-020				
AA5RA 4WD	F5B	MT	550	198910	199002	SZ-03	A011-25-020				
AA5PA	F5B	MT	550	198912	199002	SZ-07	A001-25-020				
AA5PA	F5B	MT	550	198912	199002	SZ-10	A001-25-020				
AA6PA	F6A	AT	660	199002	199510	SZ-03	A007-25-020B				
AA6PA	F6A	AT	660	199002	199510	SZ-14	A023-25-020A				
AA6PA	F6A	MT	660	199002	199510	SZ-07	A001-25-020B				
AA6PA	F6A	MT	660	199002	199510	SZ-14	A083-25-020				
AA6RA 4WD	F6A	MT	660	199002	199510	SZ-03	A011-25-020B				
AA6RA 4WD	F6A	MT	660	199002	199510	SZ-14	A027-25-020				
AA6PA	F6A TBO	AT	660	199101	199510	SZ-07	A033-25-020				
AA6PA	F6A TBO	MT	660	199101	199510	SZ-01	A013-25-020				
AA6RA 4WD	F6A	AT	660	199103	199510	SZ-07	A033-25-020				
AC6P	F6A	AT	660	199510	199809	SZ-14	A023-25-020				
AC6P	F6A	MT	660	199510	199809	SZ-14	A083-25-020				
BC6P	F6A TBO	AT	660	199510	199809	SZ-07	A033-25-020				
AC6P	F6A TBO	MT	660	199510	199809	SZ-01	A065-25-020				
AC6R 4WD	F6A	AT	660	199510	199809	SZ-07	A033-25-020				
AC6R 4WD	F6A	MT	660	199510	199809	SZ-14	A027-25-020				
AC6R 4WD	F6A	MT	660	199510	199809	SZ-14	A092-25-020				
CLEF											
GEEPA	KF	4AT	2000	199204		MZ-18	G560-25-500A	MZ-IPAT-01	G560-22-520	MZ-IDAT-04	G560-22-620
GESRA 4WD	FS	4AT	2000	199204		MZ-31	G077-25-50X				
GESRA 4WD	FS	4AT	2000	199204		MZ-31	G076-25-500				
GE5PA	KL	4AT	2500	199204		MZ-10	G564-25-500A				
CRONOS											
GE8P	K8	5MT	1800	199109	199407	MZ-18	G568-25-500A	MZ-IPMT-03	G568-22-520	MZ-IDMT-02	G568-22-620
GE8P	K8	5MT	1800	199109	199407	MZ-18A44	G568-25-50X	MZ-IPMT-03	G568-22-520	MZ-IDMT-02	G568-22-620
GE8P	K8	4AT	1800	199109	199407	MZ-18	G560-25-500A	MZ-IPAT-01	G560-22-520	MZ-IDAT-04	G560-22-620
GE8P	K8	4AT	1800	199109	199407	MZ-18A44	G560-25-50X	MZ-IPAT-01	G560-22-520	MZ-IDAT-04	G560-22-620
GEEP	KF	5MT	2000	199109	199604	MZ-18	G568-25-500A	MZ-IPMT-03	G568-22-520	MZ-IDMT-02	G568-22-620
GEEP	KF	5MT	2000	199109	199604	MZ-18A44	G568-25-50X	MZ-IPMT-03	G568-22-520	MZ-IDMT-02	G568-22-620
GEEP	KF	4AT	2000	199109	199604	MZ-18	G560-25-500A	MZ-IPAT-01	G560-22-520	MZ-IDAT-04	G560-22-620
GEEP	KF	4AT	2000	199109	199604	MZ-18A44	G560-25-50X	MZ-IPAT-01	G560-22-520	MZ-IDAT-04	G560-22-620
GESR 4WD	FS	5MT	2000	199111	199604	MZ-31	G076-25-500				
GESR 4WD	FS	5MT	2000	199111	199604	MZ-31	G077-25-50X				
GESR 4WD	FS	4AT	2000	199111	199604	MZ-31	G076-25-500				
GESR 4WD	FS	4AT	2000	199111	199604	MZ-31	G077-25-50X				
GESR 4WD	FS	5MT	2000	199111	199604	MZ-31	G076-25-500				
GEFP	RF	5MT	2000	199204	199604	MZ-18	G572-25-500	MZ-IPMT-03	G568-22-520	MZ-IDMT-02	G568-22-620
GEFP	RF	5MT	2000	199204	199604	MZ-18A44	G572-25-50X	MZ-IPMT-03	G568-22-520	MZ-IDMT-02	G568-22-620
GEFP	RF	4AT	2000	199204	199604	MZ-18	G576-25-500	MZ-IPAT-01	G560-22-520	MZ-IDAT-04	G560-22-620
GEFP	RF	4AT	2000	199204	199604	MZ-18A44	G576-25-50X	MZ-IPAT-01	G560-22-520	MZ-IDAT-04	G560-22-620
GE5P	KL	4AT	2500	199204	199604	MZ-10	G564-25-500A				
GE5P	KL	4AT	2500	199204	199604	MZ-10	G564-25-50X				
DEMIO											
DW3W	B3	5MT	1300	199608	200208	MZ-14	FA30-25-400				
DW3W	B3	5MT	1300	199608	200208	MZ-14	FA30-22-510				
DW3W	B3	3AT	1300	199608	200208	MZ-14	FA32-25-400				
DW3W	B3	3AT	1300	199608	200208	MZ-14	FS20-22-510				
DY3W	B3	AT	1300	200206		MZ-DY3	GG11-22-510A				
DW5W	B5	5MT	1500	199608	200208	MZ-14	FA36-25-400				
DW5W	B5	5MT	1500	199608	200208	MZ-14	FA36-22-510				
DW5W	B5	5MT	1500	199608	200208	MZ-14	FA30-22-510				
DW5W	B5	4AT	1500	199608	200208	MZ-14	FA37-25-400A				
DW5W	B5	4AT	1500	199608	200208	MZ-14	FA37-22-510A				
DW5W	B5	4AT	1500	199608	200208	MZ-14	FA34-25-400A				
DW5W	B5	4AT	1500	199608	200208	MZ-14	FA34-22-510A				
ETUDE											
BFSP	B5	5MT	1500	198802	199008	MZ-01	F003-25-400E				
BFSP	B5	3AT	1500	198802	199008	MZ-01	F005-25-400D				
BFMP	B6	5MT	1600	198701	199008	MZ-12	F004-25-500D				
BFMP	B6	4AT	1600	198701	199008	MZ-01	F005-25-400D				

MAZDA

MODEL	ENGINE	AT/MT	CC	YEAR	YEAR	OUTER	O.E No.R	INNER R	O.E No.IR	INNER L	O.E No.IL
EUNOS 100											
BG5PE	B5	MT/AT	1500	198910	199406	MZ-09	F024-25-400D				
BG8PE	BP	5MT	1800	198910	199406	MZ-26A44	F037-25-500A				
BG8PE	BP	4AT	1800	198910	199406	MZ-26	F037-25-500A				
BG8PE	BP	4AT	1800	198910	199406	MZ-26	F037-25-500A				
EUNOS 300											
MA8PE	F8	MT/AT	1800	198911	199201	MZ-05	GA23-25-500A				
MAEPE	FE	MT/AT	2000	198911	199201	MZ-06	GA44-25-500				
EUNOS 500											
CA8P	K8	5MT	1800	199112	199402	MZ-18	G037-25-500	MZ-IPMT-03	G568-22-520	MZ-IDMT-02	G568-22-620
CA8P	K8	5MT	1800	199112	199402	MZ-18A44	G037-25-50X	MZ-IPMT-03	G568-22-520	MZ-IDMT-02	G568-22-620
CA8P	K8	4AT	1800	199112	199403	MZ-18	G047-25-500	MZ-IPAT-01	G560-22-520	MZ-IDAT-04	G560-22-620
CA8P	K8	4AT	1800	199112	199403	MZ-18A44	G047-25-50X	MZ-IPAT-01	G560-22-520	MZ-IDAT-04	G560-22-620
CAPP	FP	5MT	1800	199402	199512	MZ-18	G037-25-500B	MZ-IPMT-03	G568-22-520	MZ-IDMT-02	G568-22-620
CAPP	FP	5MT	1800	199402	199512	MZ-18	G568-25-500	MZ-IPMT-03	G568-22-520	MZ-IDMT-02	G568-22-620
CAPP	FP	5MT	1800	199402	199512	MZ-18A44	G037-25-50X	MZ-IPMT-03	G568-22-520	MZ-IDMT-02	G568-22-620
CAPP	FP	5MT	1800	199402	199512	MZ-18A44	G568-25-50X	MZ-IPMT-03	G568-22-520	MZ-IDMT-02	G568-22-620
CAPP	FP	4AT	1800	199402	199512	MZ-18	G047-25-500	MZ-IPAT-01	G560-22-520	MZ-IDAT-04	G560-22-620
CAPP	FP	4AT	1800	199402	199512	MZ-18A44	G047-25-50X	MZ-IPAT-01	G560-22-520	MZ-IDAT-04	G560-22-620
CAEP	KF	5MT	2000	199112	199512	MZ-18	G037-25-500	MZ-IPMT-03	G568-22-520	MZ-IDMT-02	G568-22-620
CAEP	KF	5MT	2000	199112	199512	MZ-18A44	G037-25-50X	MZ-IPMT-03	G568-22-520	MZ-IDMT-02	G568-22-620
CAEP	KF	4AT	2000	199112	199403	MZ-18	G047-25-500	MZ-IPAT-01	G560-22-520	MZ-IDAT-04	G560-22-620
CAEP	KF	4AT	2000	199112	199403	MZ-18A44	G047-25-50X	MZ-IPAT-01	G560-22-520	MZ-IDAT-04	G560-22-620
CAEP	KF	5MT	2000	199403	199512	MZ-18	G568-25-500	MZ-IPMT-03	G568-22-520	MZ-IDMT-02	G568-22-620
CAEP	KF	5MT	2000	199403	199512	MZ-18A44	G568-25-50X	MZ-IPMT-03	G568-22-520	MZ-IDMT-02	G568-22-620
EUNOS 800											
TA3	KJ SPC	4AT	2300	199309	199604		GF05-25-500				
TA3	KJ SPC	4AT	2300	199309	199604		GF05-25-50XA				
TA3	KJ	4AT	2300	199604	200007		GR05-25-500				
TA3	KJ	4AT	2300	199604	200007		GR05-25-50XA				
TA5	KL	4AT	2500	199309	199604	MZ-10	GR01 -25-500				
TA5	KL	4AT	2500	199309	199604	MZ-10A90	GR01-25-50X				
TA5	KL	4AT	2500	199604	200007	MZ-10	GU01 -25-500				
TA5	KL	4AT	2500	199604	200007	MZ-10A90	GU01-25-50XA				
EUNOS PRESSO											
EC5S	B5	MT/AT	1500	199309	199801	MZ-24	F025-25-400B				
EC5S	B5	MT/AT	1500	199309	199801	MZ-24A44	F030-25-400B				
EC8S	K8	5MT	1800	199104	199310	MZ-26	F036-25-500				
EC8S	K8	5MT	1800	199104	199310	MZ-26	F035-25-50X				
EC8S	K8	4AT	1800	199104	199310	MZ-26	F016-25-500				
EC8S	K8	4AT	1800	199104	199310	MZ-26	F015-25-50X				
EC8S	K8	5MT	1800	199310	199801	MZ-26	GA06-25-500				
EC8S	K8	5MT	1800	199310	199801	MZ-26	GA07-25-50X				
EC8S	K8	4AT	1800	199310	199801	MZ-26	FF01-25-500				
EC8S	K8	4AT	1800	199310	199801	MZ-26	FF02-25-50X				
ESCAPE											
EPEWF	YF	4AT	2000	200012		MZ-41A44	GG06-25-50XD				
EPEWF	YF	4AT	2000	200012		MZ-41A44	GG36-25-50X				
EPEWF 4WD	YF	4AT	2000	200012		MZ-41A44	GG06-25-50XD				
EPEWF 4WD	YF	4AT	2000	200012		MZ-41A44	GG36-25-50X				
EPFWF	AJ	4AT	3000	200012		MZ-41A44	GG06-25-50XD				
EPFWF	AJ	4AT	3000	200012		MZ-41A44	GG36-25-50X				
EPFWF 4WD	AJ	4AT	3000	200012		MZ-41A44	GG06-25-50XD				
EPFWF 4WD	AJ	4AT	3000	200012		MZ-41A44	GG36-25-50X				
FAMILIA/323/LASER											
BD	E3	MT/AT	1300	198001	198501	MZ-01	F001-25-400A				
BF3TP	B3	MT	1300	198401	198901	MZ-04	F006-25-400A				
BF3TP	B3	MT	1300	198401	198901	MZ-04	F006-25-400B				
BF3TP	B3	MT	1300	198401	198901	MZ-04	F006-25-400C				
BF3P	E3	AT	1300	198401	198701	MZ-01	F005-25-400A				
BF3P	E3	AT	1300	198401	198701	MZ-01	F005-25-400B				
BF3P	E3	AT	1300	198401	198701	MZ-01	F005-25-400C				
BF3TP	B3	AT	1300	198701	198901	MZ-01	F005-25-400A				
BF3TP	B3	AT	1300	198701	198901	MZ-01	F005-25-400B				
BF3TP	B3	AT	1300	198701	198901	MZ-01	F005-25-400C				
BG3PS	B3	MT/AT	1300	198902	199601	MZ-08	F023-25-400D				
BG3PS	B3	MT/AT	1300	198902	199601	MZ-08	F023-25-400D				
323 Mk V	B3 16V		1300	199408	199809	MZ-24A44	F079-22-610A				
BHA3PS	B3	5MT	1300	199610	199905	MZ-24	FA01-25-40XC				
BHA3PS	B3	MT/AT	1300	199610	199905	MZ-24	FZ02-25-40X				
BHA3PS	B3	3AT	1300	199610	199905	MZ-24	FZ01-25-40XC				
BHA3PS	B3	3AT	1300	199610	199905	MZ-24	FZ01-25-40XC				
BJ3P	B3-ME	4AT	1300	199806		MZ-34	FD50-25-40XA				
BJ3P	B3-ME	5MT	1300	199806		MZ-34	FA60-25-40X				
BD	E5	MT/AT	1500	198001	198501	MZ-01	F001-25-400 B				
BF5PS	E5	AT	1500	198501	198701	MZ-01	F005-25-400A				
BF5PS	E5	AT	1500	198501	198701	MZ-01	F005-25-400B				
BF5PS	E5	AT	1500	198501	198701	MZ-01	F005-25-400C				
BF5PS	E5 TBO	MT	1500	198501	198701	MZ-12	F004-25-500A				
BF5PS	E5 TBO	MT	1500	198501	198701	MZ-12	F004-25-500B				
BF5PS	E5 TBO	MT	1500	198501	198701	MZ-12	F004-25-500C				
BF5SP	B5	AT	1500	198701	198901	MZ-01	F005-25-400A				
BF5SP	B5	AT	1500	198701	198901	MZ-01	F005-25-400B				
BF5SP	B5	AT	1500	198701	198901	MZ-01	F005-25-400C				

MAZDA

MODEL	ENGINE	AT/MT	CC	YEAR	YEAR	OUTER	O.E No.R	INNER R	O.E No.IR	INNER L	O.E No.IL
BF5SP	B5	MT	1500	198701	198901	MZ-01	F003-25-400A				
BF5SP	B5	MT	1500	198701	198901	MZ-01	F003-25-400B				
BG5SP	B5	MT/AT	1500	198902	199404	MZ-08	F023-25-400D				
BG5SP	B5	MT/AT	1500	198902	199404	MZ-08	F023-25-400D				
BG5SP	B5	MT/AT	1500	198902	199404	MZ-09	F024-25-400D	MZIU-507	F024-22-520	MZIU-507	F024-22-520
BG5SP	B5	MT/AT	1500	198902	199404	MZ-09	F028-25-400	MZIU-507	F024-22-520	MZIU-507	F024-22-520
BHA5PS	B5	5MT	1500	199405		MZ-24	FA01-25-40X	MZIU-507	F024-22-520	MZIU-507	F024-22-520
BHA5PS	B5	MT/AT	1500	199405		MZ-24	FA01-25-40X	MZIU-507	F024-22-520	MZIU-507	F024-22-520
BHA5PS	B5	5MT	1500	199405	199507	MZ-24	FA02-25-40X	MZIU-507	F024-22-520	MZIU-507	F024-22-520
BHA5PS	B5	4AT	1500	199405	199507	MZ-24	FA01-25-40X	MZIU-507	F024-22-520	MZIU-507	F024-22-520
BHA5PS	B5	4AT	1500	199405	199507	MZ-24	FA02-25-40X	MZIU-507	F024-22-520	MZIU-507	F024-22-520
BHALPS	Z5	5MT	1500	199405	199610	MZ-24	FA01-25-40X	MZIU-507	F024-22-520	MZIU-507	F024-22-520
BHALPS	Z5	5MT	1500	199405	199610	MZ-24	FA01-25-40X	MZIU-507	F024-22-520	MZIU-507	F024-22-520
BHALPS	Z5	5MT	1500	199405	199608	MZ-24	FA02-25-40X	MZIU-507	F024-22-520	MZIU-507	F024-22-520
BHALPS	Z5	MT/AT	1500	199405	199610	MZ-24	FZ02-25-40X	MZIU-507	F024-22-520	MZIU-507	F024-22-520
BHALPS	Z5	4AT	1500	199405	199608	MZ-24	FA01-25-40X	MZIU-507	F024-22-520	MZIU-507	F024-22-520
BHALPS	Z5	4AT	1500	199405	199608	MZ-24	FA02-25-40X	MZIU-507	F024-22-520	MZIU-507	F024-22-520
BHALPS	Z5	5MT	1500	199405	199610	MZ-24	FA01-25-40X	MZIU-507	F024-22-520	MZIU-507	F024-22-520
BHALPS	Z5	5MT	1500	199406	199610	MZ-24	FA01-25-40XB	MZIU-507	F024-22-520	MZIU-507	F024-22-520
BHALPS	Z5	5MT	1500	199406	199610	MZ-24	FA01 -22-510E	MZIU-507	F024-22-520	MZIU-507	F024-22-520
BHALPS	Z5	5MT	1500	199406	199610	MZ-24	F069-25-600B	MZIU-507	F024-22-520	MZIU-507	F024-22-520
BHALPS	Z5	5MT	1500	199406	199610	MZ-24	FA01-25-40XC	MZIU-507	F024-22-520	MZIU-507	F024-22-520
BHALPS	Z5	5MT	1500	199406	199610	MZ-24	FA01 -22-510E	MZIU-507	F024-22-520	MZIU-507	F024-22-520
BHALPS	Z5	5MT	1500	199406	199610	MZ-24	FA02-25-40XE	MZIU-507	F024-22-520	MZIU-507	F024-22-520
BHALPS	Z5	5MT	1500	199406	199610	MZ-24	FA02-22-510E	MZIU-507	F024-22-520	MZIU-507	F024-22-520
BHALPS	Z5	5MT	1500	199406	199610	MZ-24	F069-25-60XB	MZIU-507	F024-22-520	MZIU-507	F024-22-520
BHALPS	Z5	MT/AT	1500	199406	199610	MZ-24	FZ02-25-40XC	MZIU-507	F024-22-520	MZIU-507	F024-22-520
BHALPS	Z5	5MT	1500	199406	199610	MZ-24	FA02-22-510E	MZIU-507	F024-22-520	MZIU-507	F024-22-520
BHALPS	Z5	4AT	1500	199406	199610	MZ-24	FA01-25-40XB	MZIU-507	F024-22-520	MZIU-507	F024-22-520
BHALPS	Z5	4AT	1500	199406	199610	MZ-24	FA01 -22-510E	MZIU-507	F024-22-520	MZIU-507	F024-22-520
BHALPS	Z5	4AT	1500	199406	199610	MZ-24	FZ01-25-40XC	MZIU-507	F024-22-520	MZIU-507	F024-22-520
BHALPS	Z5	4AT	1500	199406	199610	MZ-24	FA02-25-40XE	MZIU-507	F024-22-520	MZIU-507	F024-22-520
BHALPS	Z5	4AT	1500	199406	199610	MZ-24	FA02-22-510C	MZIU-507	F024-22-520	MZIU-507	F024-22-520
BHALPS	Z5	4AT	1500	199406	199610	MZ-24	FA02-25-510C	MZIU-507	F024-22-520	MZIU-507	F024-22-520
BHA5PS	B5	5MT	1500	199406	199610	MZ-24	FA02-25-40XE	MZIU-507	F024-22-520	MZIU-507	F024-22-520
BHA5PS	B5	5MT	1500	199406	199610	MZ-24	FA02-25-40XC	MZIU-507	F024-22-520	MZIU-507	F024-22-520
BHA5PS	B5	5MT	1500	199406	199610	MZ-24	FA01-25-40XB	MZIU-507	F024-22-520	MZIU-507	F024-22-520
BHA5PS	B5	5MT	1500	199406	199610	MZ-24	FA01-25-40XB	MZIU-507	F024-22-520	MZIU-507	F024-22-520
BHA5PS	B5	4AT	1500	199406	199610	MZ-24	FA02-25-40XE	MZIU-507	F024-22-520	MZIU-507	F024-22-520
BHA5PS	B5	4AT	1500	199406		MZ-24	FA01-25-40XB	MZIU-507	F024-22-520	MZIU-507	F024-22-520
BHA5PS	B5	4AT	1500	199406		MZ-24	FZ01-25-40XC	MZIU-507	F024-22-520	MZIU-507	F024-22-520
323 Mk V	Z5-DE		1500	199408	199809	MZ-24A44	F079-22-610A	MZIU-507	F024-22-520	MZIU-507	F024-22-520
BHALPS	Z5	MT/AT	1500	199409	199610	MZ-24	F063-25-500C	MZIU-507	F024-22-520	MZIU-507	F024-22-520
BHALPS	Z5	MT/AT	1500	199409	199610	MZ-24	F063-25-500C	MZIU-507	F024-22-520	MZIU-507	F024-22-520
BHALPS	Z5	MT/AT	1500	199409	199610	MZ-24	FZ02-25-40XA	MZIU-507	F024-22-520	MZIU-507	F024-22-520
BHALPS	Z5	5MT	1500	199409	199610	MZ-24	FA13-25-50X	MZIU-507	F024-22-520	MZIU-507	F024-22-520
BHALPS	Z5	MT/AT	1500	199409	199610	MZ-24	FA08-25-50XB	MZIU-507	F024-22-520	MZIU-507	F024-22-520
BHALPS	Z5	MT/AT	1500	199409	199610	MZ-24	FA08-25-50XC	MZIU-507	F024-22-520	MZIU-507	F024-22-520
BHALPS	Z5	4AT	1500	199409	199610	MZ-24	FA08-25-50XB	MZIU-507	F024-22-520	MZIU-507	F024-22-520
BHALPS	Z5	4AT	1500	199409	199610	MZ-24	FA08-25-50XC	MZIU-507	F024-22-520	MZIU-507	F024-22-520
BHA5PS	B5	MT/AT	1500	199507	199610	MZ-24	FA02-25-40X	MZIU-507	F024-22-520	MZIU-507	F024-22-520
BHALPS	Z5	4AT	1500	199608	199905	MZ-24A44	FZ01-25-40X	MZIU-507	F024-22-520	MZIU-507	F024-22-520
BHALPS	Z5	5MT	1500	199608	199905	MZ-24	FZ02-25-40X	MZIU-507	F024-22-520	MZIU-507	F024-22-520
BHALPS	Z5	4AT	1500	199608	199905	MZ-24A44	FZ01-25-40X	MZIU-507	F024-22-520	MZIU-507	F024-22-520
BJ5P 4WD	ZL-DE	5MT	1500	199806			FD62-25-50XA				
BJ5P 4WD	ZL-DE	4AT	1500	199806			FD53-25-50XA				
BJ5P	ZL-DE	5MT	1500	199806		MZ-34	FA60-25-40X				
BJ5P	ZL-DE	4AT	1500	199806		MZ-34	FA50-25-40XA				
BJ5P	ZL-VE	5MT	1500	199806		MZ-34	FA58-25-50X				
BJ5P	ZL-VE	4AT	1500	199806		MZ-34	FA52-25-50X				
BFMP	B6	AT	1600	198501	198901	MZ-01	F005-25-400A				
BFMP	B6	AT	1600	198501	198901	MZ-01	F005-25-400B				
BFMP	B6	AT	1600	198501	198901	MZ-01	F005-25-400C				
BFMP	B6	MT	1600	198501	198901	MZ-12	F004-25-500A				
BFMP	B6	MT	1600	198501	198901	MZ-12	F004-25-500B				
BFMP	B6	MT	1600	198501	198901	MZ-12	F004-25-500C				
BG6SP	B6	MT/AT	1600	198902	199101	MZ-09	F024-25-400D	MZIU-507	F024-22-520	MZIU-507	F024-22-520
BG6RZ 4WD	B6	5MT	1600	198908	199601		F051-25-500				
BG6RZ 4WD	B6	4AT	1600	198908	199601		F059-25-500				
323 Mk V	4EE1-T TD		1600	199408	199809	MZ-24A44	F079-22-610A				
BHA6R 4WD	B6	5MT	1600	199409	199806	MZ-23	GD01 -25-500				
BHA6R 4WD	B6	5MT	1600	199409	199806	MZ-23	GD02-25-50XA				
BHA6R 4WD	B6	4AT	1600	199409	199806	MZ-23	GD01 -25-500				
BHA6R 4WD	B6	4AT	1600	199409	199806	MZ-23	GD02-25-50XA				
BHA6R 4WD	B6	5MT	1600	199410		MZ-23	GD01-25-500C				
BHA6R 4WD	B6	5MT	1600	199410		MZ-23	GD01-25-500C				
BHA6R 4WD	B6	5MT	1600	199410		MZ-23	GD01-25-500C				
BHA6R 4WD	B6	MT/AT	1600	199410		MZ-23	GD02-25-50XC				
BHA6R 4WD	B6	MT/AT	1600	199410		MZ-23	GD02-25-50XC				
BHA6R 4WD	B6	4AT	1600	199410		MZ-23	GD01-25-500C				
BF7P	PN	MT	1700	198701	198901	MZ-01	F003-25-400A				
BF7P	PN	MT	1700	198701	198901	MZ-01	F003-25-400B				
BG7P	PN	MT/AT	1700	198901	199406	MZ-08	F023-25-400				
BG7P	PN	MT/AT	1700	198902	199403	MZ-08	F023-25-400D				
BHA7P	4EE1 TBO	5MT	1700	199409	199507	MZ-26	FA14-25-50X				
BHA7P	4EE1 TBO	5MT	1700	199409	199507	MZ-26	F066-25-500				

MAZDA

MODEL	ENGINE	AT/MT	CC	YEAR	YEAR	OUTER	O.E No.R	INNER R	O.E No.IR	INNER L	O.E No.IL
BHA7P	4EE1 TBO	5MT	1700	199409	199507	MZ-24	FA15-25-50X				
BHA7P	4EE1 TBO	5MT	1700	199409	199507	MZ-24	F066-25-50X				
BHA7P	4EE1 TBO	4AT	1700	199409	199507	MZ-26	F066-25-500				
BHA7P	4EE1 TBO	4AT	1700	199409	199507	MZ-24	F066-25-50X				
BHA7R 4WD	4EE1 TBO	5MT	1700	199409	199806	MZ-23	GD01 -25-500				
BHA7R 4WD	4EE1 TBO	5MT	1700	199409	199806	MZ-23	GD02-25-50X				
BHA7P	4EE1 TBO	5MT	1700	199410		MZ-26	FA14-36-50XC				
BHA7P	4EE1 TBO	MT/AT	1700	199410		MZ-26	F066-25-500B				
BHA7P	4EE1 TBO	MT/AT	1700	199410		MZ-26	F066-25-500C				
BHA7P	4EE1 TBO	4AT	1700	199410		MZ-26	F066-25-500B				
BHA7P	4EE1 TBO	4AT	1700	199410		MZ-26	F066-25-500C				
BHA7P	4EE1 TBO	4AT	1700	199410		MZ-26	F066-25-500B				
BHA7P	4EE1 TBO	4AT	1700	199410		MZ-26	F066-25-500B				
BHA7P	4EE1 TBO	4AT	1700	199410		MZ-26	F066-25-500C				
BHA7P	4EE1 TBO	5MT	1700	199501	199608	MZ-26A44	FA20-25-500				
BHA7P	4EE1 TBO	5MT	1700	199501	199608	MZ-26A44	FA22-25-50X				
BHA7P	4EE1 TBO	4AT	1700	199501	199608	MZ-26A44	FA20-25-500				
BHA7P	4EE1 TBO	4AT	1700	199501	199608		FA22-25-50X				
BHA7P	4EE1 TBO	5MT	1700	199608	199806	MZ-26	F066-25-500				
BHA7P	4EE1 TBO	5MT	1700	199608	199806	MZ-24	F066-25-50X				
BHA7P	4EE1 TBO	4AT	1700	199608	199806	MZ-26	F066-25-500				
BHA7P	4EE1 TBO	4AT	1700	199608	199806	MZ-24	F066-25-50X				
BG8SP	BP	MT/AT	1800	198901		MZ-24	F025-25-400				
BG8RZ 4WD	BP TBO	5MT	1800	198908	199404		F051-25-500				
BG8RZ 4WD	BP TBO	5MT	1800	198908	199404		F059-25-500				
BG8RZ 4WD	BP TBO	5MT	1800	198908	199404		F053-25-50X				
BG8SP	BP	5MT	1800	199003	199011	MZ-26	F037-25-500A				
BG8SP	BP	5MT	1800	199011	199404	MZ-26	F039-25-50X				
BG8PSP	BP	4AT	1800	199011	199404	MZ-26	F039-25-50X				
BG8P	BP	MT/AT	1800	199011	199404	MZ-11	F062-22-510A				
BHA8PS	BP	5MT	1800	199405	199806	MZ-24	FA15-25-50X				
BHA8PS	BP	MT/AT	1800	199405	199806	MZ-24	F066-25-50X				
BHA8PS	BP	5MT	1800	199405	199507	MZ-26	FA14-25-50X				
BHA8PS	BP	5MT	1800	199405	199507	MZ-26A44	F066-25-500				
BHA8PS	BP	5MT	1800	199406	199806	MZ-26	FA14-25-50X				
BHA8PS	BP	MT/AT	1800	199406	199806	MZ-26	F066-25-500B				
BHA8PS	BP	MT/AT	1800	199406	199806	MZ-26	F066-25-500C				
BHA8PS	BP	5MT	1800	199406	199806	MZ-26	F066-25-500B				
BHA8PS	BP	5MT	1800	199406	199806	MZ-26	F066-25-500C				
BHA8PS	BP	MT/AT	1800	199406	199806	MZ-26	F066-25-500B				
BHA8PS	BP	MT/AT	1800	199406	199806	MZ-26	F066-25-500C				
BHA8PS	BP	5MT	1800	199406	199806	MZ-26	F066-25-500B				
BHA8PS	BP	5MT	1800	199406	199806	MZ-26	F066-25-500C				
BHA8PS	BP	5MT	1800	199406	199806	MZ-26	F066-25-500B				
BHA8PS	BP	5MT	1800	199406	199806	MZ-26	F066-25-500C				
BHA8PS	BP	5MT	1800	199507	199806	MZ-26	F066-25-500				
BHA8PS	BP	5MT	1800	199507	199806	MZ-26	F066-25-500				
BHA8PS	BP	5MT	1800	199507		MZ-24	FA15-25-50X				
BHA8PS	BP	5MT	1800	199507		MZ-26	FA14-25-50X				
BHA8PS	BP	5MT	1800	199507		MZ-24	FA15-25-50X				
BJEP	RF	MT/AT	2000	199806			FD51-25-50X				
BJEP	RF	5MT	2000	199806			FA61-25-50X				
BJEP	RF	4AT	2000	199806			FA51-25-50XA				
BJFW 4WD	FS-ZE	MT/AT	2000	199908	200208	MZ-34	FD55-22-510				
FAMILIA VAN/FAMILIA WAGON/LASER VAN											
1BF3V	E3	MT	1300	198511	199408	MZ-04	F006-25-400D				
2BW3W	E3	5MT	1300	198910	199408	MZ-04	F006-25-500E				
3BVY10	GA13DS E	5MT	1300	199408	199906	NS-13	1N00-25-500				
3BVY10	GA13DS E	4AT	1300	199408	199906	NS-13	1N02-25-500				
323 Mk V	B3 16V		1300	199408	199809	MZ-24A44	F079-22-610A				
BVY11	QG13DE	4AT	1300	199906			1N47-25-500				
BVY11	QG13DE	4AT	1300	199906			1N68-25-500				
BVY11	QG13DE	4AT	1300	199906			1N45-25-500				
BVY11	QG13DE	4AT	1300	199906			1N65-25-500				
BVY11	QG13DE	5MT	1300	199906			1N46-25-500				
BVY11	QG13DE	5MT	1300	199906			1N67-25-500				
BVY11	QG13DE	5MT	1300	199906			1N44-25-500				
BVY11	QG13DE	5MT	1300	199906			1N64-25-500				
BF5VW	E5	MT	1500	198511	199408	MZ-01	F003-25-400E				
BF5VW	E5	3AT	1500	198511	199408	MZ-01	F005-25-400D				
BW5W	E5	5MT	1500	198511	199408	MZ-01	F033-25-400E				
BW5W	E5	3AT	1500	198511	199408	MZ-01	F005-25-400D				
BVFY10	GA15DS E	5MT	1500	199408	199906		1N20-25-500				
BVFY10	GA15DS E	5MT	1500	199408	199906		1N15-25-500				
BVFY10	GA15DS E	4AT	1500	199408	199906	NS-13	1N02-25-500				
BVFY10	GA15DS E	4AT	1500	199408	199906	NS-13	1N03-25-500				
BVFNY10 4WD	GA15DS E	5MT	1500	199408	199906		1N18-25-500				
BWFY10	GA15DS E	5MT	1500	199408	199506	NS-13	1N00-25-500				
BWFY10	GA15DS E	4AT	1500	199408	199506	NS-13	1N02-25-500				
BWFNY10 4WD	GA15DS E	5MT	1500	199408	199906		1N18-25-500				
BWFNY10 4WD	GA15DS E	5MT	1500	199408	199906		1N19-25-500				
BWFNY10 4WD	GA15DS E	4AT	1500	199408	199906		1N18-25-500				
BWFNY10 4WD	GA15DS E	4AT	1500	199408	199906		1N19-25-500				
323 Mk V	Z5-DE		1500	199408	199809	MZ-24A44	F079-22-610A				
BWFY10	GA15DS E	5MT	1500	199506	199906	NS-13	1N01-25-500				
BWFY10	GA15DS E	4AT	1500	199506	199906		1N25-25-500				

MAZDA

MODEL	ENGINE	AT/MT	CC	YEAR	YEAR	OUTER	O.E No.R	INNER R	O.E No.IR	INNER L	O.E No.IL
BWFY10	GA15DS E	4AT	1500	199506	199906		1N26-25-500				
BVF/BWF Y11	QG15DE	4AT	1500	199906			1N47-25-500				
BVF/BWF Y11	QG15DE	4AT	1500	199906			1N68-25-500				
BVF/BWF Y11	QG15DE	4AT	1500	199906			1 N45-25-500				
BVF/BWF Y11	QG15DE	4AT	1500	199906			1N65-25-500				
BVF/BWF Y11	QG15DE	5MT	1500	199906			1N52-25-500				
BVF/BWF Y11	QG15DE	5MT	1500	199906			1N63-25-500				
BVF/BWF Y11	QG15DE	5MT	1500	199906			1N50-25-500				
BVF/BWF Y11	QG15DE	5MT	1500	199906			1N62-25-500				
BWMR 4WD	B6	5MT	1600	198704	199408		F011-25-500				
BWMR 4WD	B6	4AT	1600	198704	199408		F011-25-500				
BF6M 4WD	B6	5MT	1600	198910	199408		F011-25-500				
323 Mk V	4EE1-T TD		1600	199408	199809	MZ-24A44	F079-22-610A				
1BF7V	PN	5MT	1700	198511	199408	MZ-01	F003-25-400E				
2BW7W	PN	5MT	1700	198910	199408	MZ-01	F003-25-400E				
3BVSY10	CD17	5MT	1700	199408	199906	NS-13	1N04-25-500				
3BVSY10	CD17	5MT	1700	199408	199906	NS-13	1N05-25-500				
3BVSY10	CD17	4AT	1700	199408	199906	NS-13	1N06-25-500				
3BVSY10	CD17	4AT	1700	199408	199906	NS-13	1N07-25-500				
4BVSNY10 4WD	CD17	5MT	1700	199408	099906		1N17-25-500				
BJ8W 4WD	FP	5MT	1800	199806	200010		FD55-25-50X				
BJ8W 4WD	FP	4AT	1800	199806	200010	MZ-34	FD55-25-50X				
BVHNY11 4WD	QG18DE	4AT	1800	199906			1N49-25-500				
BVHNY11 4WD	QG18DE	4AT	1800	199906			1N61-25-500				
BVHNY11 4WD	QG18DE	4AT	1800	199906			1N48-25-500				
BVHNY11 4WD	QG18DE	4AT	1800	199906			1N60-25-500				
BVHNY11 4WD	QG18DE	5MT	1800	199906			1N49-25-500				
BVHNY11 4WD	QG18DE	5MT	1800	199906			1N61-25-500				
BVHNY11 4WD	QG18DE	5MT	1800	199906			1N48-25-500				
BVHNY11 4WD	QG18DE	5MT	1800	199906			1N60-25-500				
BWE/BVEY10	CD20	5MT	2000	199408	199506		1N21-25-500				
BWE/BVEY10	CD20	4AT	2000	199408	199506	NS-13	1N06-25-500				
BWE/BVEY10	CD20	5MT	2000	199506	199906		1N23-25-500				
BWE/BVEY10	CD20	4AT	2000	199506	199906	NS-13	1N07-25-500				
BVEY11	YD22DD	4AT	2200	199906			1N41-25-500				
BVEY11	YD22DD	4AT	2200	199906			1N39-25-500				
BVEY11	YD22DD	5MT	2200	199906			1N40-25-500				
BVEY11	YD22DD	5MT	2200	199906			1N38-25-500				
BVEY11 4WD	YD22DD	5MT	2200	199906			1N43-25-500				
BVEY11 4WD	YD22DD	5MT	2200	199906			1N42-25-500				
FESTIVA											
DA1PF	B1	4MT	1100	198510	199301	MZ-14	B002-25-500A				
DA1PF	B1	4MT	1100	198510	199301	MZ-14	B002-25-500B				
DA1PF	B1	4MT	1100	198510	199301	MZ-14	B002-25-500				
DA1PF	B1	4MT	1100	198510	199301	MZ-14	B001-22-510A				
DA3PF	B3	MT	1300	198510	199301	MZ-14	B002-25-400A				
DA3PF	B3	3AT	1300	198510	199301	MZ-14	B003-25-400D				
DA3PF	B3	5MT	1300	198510	199301	MZ-14	B002-25-400B				
DA3PF	B3	5MT	1300	198510	199301	MZ-14	B001-22-510A				
DA3PF	B3	AT	1300	198510	199301	MZ-14	B003-22-510				
DAJPF	BJ	5MT	1300	198610	199301	MZ-04	B004-25-400				
DA3PF	B3	4MT	1300	198611	199301	MZ-14	B002-25-400B				
DA3PF	B3	4MT	1300	198611	199301	MZ-14	B001-22-510A				
DAJPF	BJ	5MT	1300	198805	199301	MZ-04	B004-25-400A				
DAJPF	BJ	5MT	1300	198805	199301	MZ-04	B004-25-510				
DAJPF	BJ	5MT	1300	198805	199301	MZ-04	B004-22-510				
DA242	B3	5MT	1300	198904	199112	MZ-14	B002-25-400A				
DA242	B3	3AT	1300	198904	199405	MZ-14	B003-25-400C				
D23PF	B3	5MT	1300	199211	199710	MZ-04	BS05-25-400				
D23PF	B3	4AT	1300	199211	199511	MZ-04	FS18-25-400C				
D23PF	B3	4AT	1300	199511	199710	MZ-04	FS21-25-400A				
DW3WF	B3	5MT	1300	199608		MZ-14	FA30-25-400				
DW3WF	B3	5MT	1300	199608		MZ-14	FA30-22-510				
DW3WF	B3	3AT	1300	199608	199710	MZ-14	FA32-25-400				
DW3WF	B3	3AT	1300	199608	199710	MZ-14	FS20-22-510				
D25PF	B5	MT/AT	1500	199211	199409	MZ-04	FS18-25-400C				
D25PF	B5	4AT	1500	199211	199511	MZ-04	F098-25-400A				
D25PF	B5	4AT	1500	199211	199710	MZ-04	FZ98-25-400				
D25PF	B5	5MT	1500	199409	199710	MZ-04	FS21-25-400C				
D25PF	B5	MT/AT	1500	199511	199710		F099-25-400B				
D25PF	B5	4AT	1500	199511	199710	MZ-04	FZ98-25-400				
DW5WF	B5	4AT	1500	199608	199710	MZ-14	FA37-25-400				
DW5WF	B5	4AT	1500	199608	199710	MZ-14	FA37-22-510A				
DW5WF	B5	4AT	1500	199608	199710	MZ-14	FA34-25-400				
DW5WF	B5	4AT	1500	199608	199710	MZ-14	FA34-22-510A				
IXION											
CP8WF	FP-DE	4AT/C	1800	199,904	200412	MZ-45A44	FA51-25-50XB				
CP8WF	FP-DE	4AT/C	1800	199,904	200412	MZ-45A44	FA51-25-50XB				
CP8WF 4WD	FP-DE	4AT/C	1800	199,904	200412	MZ-34A44	FD55-25-50XA				
LANTIS											
CBA8P	BP	5MT	1800	199308	199706	MZ-26	F066-25-500				
CBA8P	BP	5MT	1800	199308	199706	MZ-24	F066-25-50X				
CBA8P	BP	MT/AT	1800	199308	199706	MZ-24	FA15-25-50X				
CBA8P	BP	4AT	1800	199308	199706	MZ-26	F066-25-500				
CBA8P	BP	MT/AT	1800	199308	199706	MZ-26	FA14-25-50X				

MAZDA

MODEL	ENGINE	AT/MT	CC	YEAR	YEAR	OUTER	O.E No.R	INNER R	O.E No.IR	INNER L	O.E No.IL
CBA8P	BP	4AT	1800	199308	199706	MZ-24	F066-25-50X				
CBA8P	BP	5MT	1800	199308	199706	MZ-24	FA15-25-50X				
CBAEP	KF	MT/AT	2000	199308	199706		GS01-25-500A				
CBAEP	KF	MT/AT	2000	199308	199706		GS02-25-50X				
LAPUTA											
HP11S	F6A TBO	3/4AT	660	199903	200009		1A10-25-020				
HP11S	F6A TBO	5MT	660	199903	200009		1A09-25-020				
HP21S	K6A TBO	4AT	660	199903	200009		1A10-25-020				
HP11S 4WD	F6A TBO	3/4AT	660	199903	200009		1A08-25-020				
HP11S 4WD	K6A TBO	5MT	660	199903	200009		1A08-25-020				
HP21S 4WD	K6A TBO	4AT	660	199903	200009		1A08-25-020				
LASER LIDEA WAGON											
BJ3PF	B3	5MT	1300	199812	200012	MZ-34	FA60-25-40X				
BJ3PF	B3	4AT	1300	199812	200012	MZ-34	FA50-25-40XB				
BJ5WF/PF	ZL S-VT	5MT	1500	199812	200012	MZ-34	FA58-25-50X				
BJ5WF/PF	ZL S-VT	4AT	1500	199812	200012	MZ-34	FA52-25-50X				
BJ5WF/PF	ZL	5MT	1500	199812	200012	MZ-34	FA60-25-40X				
BJ5WF/PF	ZL	4AT	1500	199812	200012	MZ-34	FA50-25-40XB				
BJ5PF 4WD	ZL	5MT	1500	199812	200012		FD62-25-50XA				
BJ5PF 4WD	ZL	4AT	1500	199812	200012		FD53-25-50XA				
BJ8WF 4WD	FP	5MT	1800	199812	200012		FD55-25-50XA				
BJ8WF 4WD	FP	4AT	1800	199812	200012	MZ-34	FD55-25-50XA				
BJEPF	RF	4AT	2000	199812	200012		FA51-25-50X				
MAZDA 3/AXELA											
BK5P	ZY-VE	4AT/F	1500	200309	200412	MZ-40	FR02-25-50X				
BK5P	ZY-VE	4AT/F	1500	200309	200412	MZ-40	FG02-25-500C	MZIR-M3	FG02-22-520	MZIL-M3	FG02-22-620
BK5P	ZY-VE	5MT/F	1500	200309	200413	MZ-40	FR01-25-50X				
BK5P	ZY-VE	5MT/F	1500	200309	200414	MZ-40	FG01-25-500D				
BK5P	ZY-VE	4AT/F	1500	200501		MZ-42	FG02-25-500D	MZIR-M3	FG02-22-520	MZIL-M3	FG02-22-620
BK5P	ZY-VE	4AT/F	1500	200501		MZ-42	FG02-25-500E	MZIR-M3	FG02-22-520A	MZIL-M3	FG02-22-620A
BK5P	MZR	MT	1600	200309		MZ-40	FG02-25-500C	MZIR-M3M1	FG01-22-520	MZIL-M3M1	FG01-22-620
BKEP	LF-DE	4AT/F	2000	200309	200414	MZ-40	GR25-25-50XB	MZIR-M3A2	GG25-22-520	MZIL-M3A2	GG25-22-620
BKEP	LF-DE	4AT/F	2000	200309	200414	MZ-40	GG25-25-500C	MZIR-M3A2	GG25-22-520	MZIL-M3A2	GG25-22-620
BKEP	LF-DE	MT	2000	200309		MZ-40	GG25-25-500C	MZIR-M3M2	GG28-25-600	MZIL-M3M2	GG28-22-620A
BK3P	L3-VE	4AT/F	2300	200309		MZ-43	GR27-25-50XB				
BK3P	L3-VE	4AT/F	2300	200309		MZ-43	GG27-25-500E				
BK3P	L3-VE	5MT/F	2300	200312		MZ-43	GR28-25-50X				
BK3P	L3-VE	5MT/F	2300	200312		MZ-43	GG28-25-500C				
MILLENIA											
TAFP	KF-ZE	4AT	2000	200007		MZ-10	GU01-25-50XC				
TA5P	KL-ZE	4AT	2500	200007		MZ-10	GU01-25-50XC				
MPV											
LWEW	FS	4AT	2000	199906		MZ-MPV	GA22-25-50X				
LWEW	FS	4AT	2000	199906		MZ-MPV	GA20-25-50XB				
LW		AT/MT	2300	200206		MZ-MP2	GD46-22-510A	MZIR-MP1	GD46-22-520A	MZIL-MP1	GD46-22-620A
LVLR 4WD	WL	4AT	2500	199510	199611		MD07-25-500				
LW5W /4WD	GY	4AT	2500	199906		MZ-MPV	GA22-25-50X				
LW5W /4WD	GY	4AT	2500	199906		MZ-MPV	GA20-25-50XB	MZIR-MP1	GD46-22-520A	MZIL-MP1	GD46-22-620A
LW		AT/MT	3000	200206				MZIR-MP2	FF05-22-520A	MZIL-MP2	FF05-22-620A
MS-6											
GE8P	K8	5MT	1800	199110	199407	MZ-18	G568-25-500A	MZ-IPMT-03	G568-22-520	MZ-IDMT-02	G568-22-620
GE8P	K8	5MT	1800	199110	199407	MZ-18A44	G568-25-50X	MZ-IPMT-03	G568-22-520	MZ-IDMT-02	G568-22-620
GE8P	K8	4AT	1800	199110	199407	MZ-18	G560-25-500A	MZ-IPAT-01	G560-22-520	MZ-IDAT-04	G560-22-620
GE8P	K8	4AT	1800	199110	199407	MZ-18A44	G560-25-50X	MZ-IPAT-01	G560-22-520	MZ-IDAT-04	G560-22-620
GEEP	KF	5MT	2000	199110	199407	MZ-18	G568-25-500A	MZ-IPMT-03	G568-22-520	MZ-IDMT-02	G568-22-620
GEEP	KF	5MT	2000	199110	199407	MZ-18A44	G568-25-50X	MZ-IPMT-03	G568-22-520	MZ-IDMT-02	G568-22-620
GEEP	KF	4AT	2000	199110	199407	MZ-18	G560-25-500A	MZ-IPAT-01	G560-22-520	MZ-IDAT-04	G560-22-620
GEEP	KF	4AT	2000	199110	199407	MZ-18A44	G560-25-50X	MZ-IPAT-01	G560-22-520	MZ-IDAT-04	G560-22-620
GESR 4WD	FS	MT/AT	2000	199204	199407	MZ-31	G076-25-500				
GESR 4WD	FS	MT/AT	2000	199204	199407	MZ-31	G077-25-50X				
GEFP	RF SPC	4AT	2000	199306	199407	MZ-18	G576-25-500	MZ-IPAT-01	G560-22-520	MZ-IDAT-04	G560-22-620
GEFP	RF SPC	4AT	2000	199306	199407	MZ-18A44	G576-25-50X	MZ-IPAT-01	G560-22-520	MZ-IDAT-04	G560-22-620
MS-8											
MBEP	KF	4AT	2000	199201	199405	MZ-18	G560-25-500A	MZ-IPAT-01	G560-22-520	MZ-IDAT-04	G560-22-620

MAZDA

MODEL	ENGINE	AT/MT	CC	YEAR	YEAR	OUTER	O.E No.R	INNER R	O.E No.IR	INNER L	O.E No.IL
MBEP	KF	4AT	2000	199201	199405	MZ-18A44	G560-25-50X	MZ-IPAT-01	G560-22-520	MZ-IDAT-04	G560-22-620
MB5A	KL	4AT	2500	199201	199405	MZ-10	G564-25-500A				
MB5A	KL	4AT	2500	199201	199405	MZ-10	G564-25-50X				
MX-6											
GEESB	KF	5MT	2000	199111	199601	MZ-18	G568-25-500A	MZ-IPMT-03	G568-22-520	MZ-IDMT-02	G568-22-620
GEESB	KF	5MT	2000	199111	199601	MZ-18A44	G568-25-50X	MZ-IPMT-03	G568-22-520	MZ-IDMT-02	G568-22-620
GEESB	KF	4AT	2000	199111	199601	MZ-18	G560-25-500A	MZ-IPAT-01	G560-22-520	MZ-IDAT-04	G560-22-620
GEESB	KF	4AT	2000	199111	199601	MZ-18A44	G560-25-50X	MZ-IPAT-01	G560-22-520	MZ-IDAT-04	G560-22-620
GE USA	KF	4AT	2000	199111	199601	MZ-056A44	G572-22-510	MZIP-555		MZID-554	
GE5SB	KL	5MT	2500	199111	199601	MZ-10A44	G570-25-500				
GE5SB	KL	5MT	2500	199111	199601	MZ-10A44	G570-25-50X				
GE5SB	KL	4AT	2500	199111	199601	MZ-10	G564-25-500A				
GE5SB	KL	4AT	2500	199111	199601	MZ-10	G564-25-50X				
GE USA	KL	4AT	2500	199111	199601	MZ-056A44	G572-22-510	MZIP-555		MZID-554	
PERSONA											
MA8P	F8	MT/AT	1800	198810	199203	MZ-05	GA23-25-500A				
MAEP	FE	MT/AT	2000	198810	199203	MZ-10A90	GA44-25-500A				
PREMACY											
CP8W	FP-DE	4AT/C	1800	199904	200412	MZ-45A44	FA51-25-50XB				
CP8W	FP-DE	4AT/C	1800	199904	200412	MZ-45A44	FA51-25-50XC				
CP8W	FP-DE	4AT/C	1800	199904	200412	MZ-45A44	FA51-25-50XB				
CP8W	FP-DE	4AT/C	1800	199904	200412	MZ-45A44	FF04-25-50X				
CP8W	FP-DE	4AT/C	1800	199904	200412	MZ-45A44	FF04-25-50X				
CP8W 4WD	FP-DE	4AT/C	1800	199904	200412	MZ-34A44	FD55-25-50XA				
CP8W 4WD	FP-DE	4AT/C	1800	199904	200412	MZ-34A44	FD55-25-50XA				
CPEW	FS-DE	4AT/C	2000	200106	200412	MZ-45A44	FF04-25-50X				
CPEW	FS-DE	4AT/C	2000	200106	200412	MZ-45A44	FF04-25-50XA				
PROCEED LEVANTE											
TJ11W	H20A	MT/AT	2000	199502	199609		1A50-25-500				
TF11W	H20A	MT/AT	2000	199502	199609		1A50-25-500				
TJ31W	RF	4AT	2000	199502	199711		1A50-25-500				
TF31W	RF	4AT	2000	199502	199711		1A50-25-500				
TJ52W	J20A	4AT	2000	199711			1A50-25-400				
TF52W	J20A	4AT	2000	199711			1A50-25-400				
UF66M	G6	5MT	2600	198911	199605	MZ-17	M070-25-500C				
UV66R 4WD	G6	MT/AT	2600	199012	199601	MZ-17	M070-25-500C				
UF66M	G6	MT/AT	2600	199602		MZ-17	MD09-25-500A				
REVUE											
DB3PA	B3	MT	1300	199008	199610	MZ-14	BS04-25-400				
DB3PA	B3	5MT	1300	199008	199610	MZ-04	BS05-25-400				
DB3PA	B3	4AT	1300	199008	199510	MZ-04	FS18-25-400C				
DB5PA	B5	MT/AT	1500	199001	199510	MZ-04	FS18-25-400				
DB5PA	B5	MT/AT	1500	199008	199510	MZ-04	FS21-25-400A				
SCRUM TRUCK											
DH52T	F6A TBO	5MT	660	199901	200205		1A00-25-500				
DH52T 4WD	F6A	MT/AT	660	199901	200205		1A00-25-500				
SCRUM VAN											
DH52V 4WD	F6A TBO	MT/AT	660	199901	199912		1A00-25-500				
DH52V 4WD	F6A	5MT	660	199901			1A00-25-500				
SCRUM WAGON											
DG52W 4WD	F6A TBO	MT/AT	660	200002			1A00-25-500				
SCRUM											
DH41T 4WD	F5B	MT	550	198905	199003		ZZSA-25-400				
DH41T 4WD	F5B	4MT	550	198905	199003		ZZS1-25-400A				
DH41V 4WD	F5B TBO	5MT	550	198905	199003		ZZSA-25-400				
DH41V 4WD	F5B	MT	550	198905	199003		ZZS1-25-400A				
DH51TV4WD	F6A	5MT	660	199002	199109		ZZSA-25-400				
DH51TV4WD	F6A	4MT	660	199002	199109		ZZS1-25-400A				
DK51TB4WD	F6A	MT/AT	660	199109			ZZS2-25-400				
DK51TB4WD	F6A	MT/AT	660	199109			1A00-25-020				
DK51TB4WD	F6A	MT/AT	660	199109			1A03-25-500				
DM51V 4WD	F6A	5MT	660	199109	199901		ZZS0-25-500				
DM51V 4WD	F6A	MT/AT	660	199109	199901		ZZS0-25-500				
DM51V 4WD	F6A	MT/AT	660	199109	199901		1A01-25-020				
DM51V 4WD	F6A	MT/AT	660	199109	199901		1A02-25-500				
TELSTER											
4GESR 4WD	FS	4AT	2000	199110	199407	MZ-31	G076-25-500				
TRIBUTE											
EPEW /4WD	YF	4AT	2000	200010			GG06-25-50XC				
EPEW	YF	4AT/C	2000	200010		MZ-41A44	GG06-25-50XD				
EPEW	YF	4AT/C	2000	200010		MZ-41A44	GG36-25-50X				
EPEW4WD	YF	4AT/C	2000	200010		MZ-41A44	GG06-25-50XD				
EPEW4WD	YF	4AT/C	2000	200010		MZ-41A44	GG36-25-50X				
EPFW /4WD	AJ	4AT	3000	200010			GG06-25-50XC				
EPFN	AJ	4AT/C	3000	200010		MZ-41A44	GG06-25-50XD				
EPFN	AJ	4AT/C	3000	200010		MZ-41A44	GG36-25-50X				
EPFW 4WD	AJ	4AT/C	3000	200010		MZ-41A44	GG06-25-50XD				
EPFW 4WD	AJ	4AT/C	3000	200010		MZ-41A44	GG36-25-50X				
XEDOS-6											
CA		MT/AT	1600	199401		MZ-11	F062-22-510				
CA		MT/AT	1600	199401		MZ-11	F062-22-510A				
CA		MT/AT	1600	199401		MZ-38A44	F061-22-510				
CA		MT/AT	1600	199401		MZ-38A44	F061-22-510A				

MERCEDES-BENZ

MODEL	ENGINE	AT/MT	CC	YEAR	YEAR	OUTER	O.E No.R	INNER R	O.E No.IR	INNER L	O.E No.IL
A-CLASS											
A140	1.4L	AT/MT	1400	199706		ME-168A48	168 360 19 72	MEIU-5001	1683603372	MEIU-5001	1683702272
A160	1.6L	AT/MT	1600	199706		ME-168A48	168 360 19 72	MEIU-5001	1683603372	MEIU-5001	1683702272
A160 CDI	1.6L	AT/MT	1600	199706		ME-168A48	168 360 19 72	MEIU-5001	1683603372	MEIU-5001	1683702272
A170 CDI	1.7L	AT/MT	1700	199706		ME-168A48	168 360 19 72	MEIU-5001	1683603372	MEIU-5001	1683702272
A190	1.9L	AT/MT	1900	199706		ME-168A48	168 360 19 72	MEIU-5001	1683603372	MEIU-5001	1683702272
E 190 (W201)											
2.0	102.921	AT/MT	2000	198210	199308	ME-124R	201 350 80 10	MEIU-124	201 350 08 13	MEIU-124	201 350 08 13
D 2.0	601.911	AT/MT	2000	198210	199308	ME-124R	201 350 80 10	MEIU-124	201 350 08 13	MEIU-124	201 350 08 13
D 2.5	602.911	AT/MT	2500	198210	199308	ME-124R	201 350 80 10	MEIU-124	201 350 08 13	MEIU-124	201 350 08 13
E 1.8	102.910	AT/MT	1800	198210	199308	ME-124R	201 350 80 10	MEIU-124	201 350 08 13	MEIU-124	201 350 08 13
E 2.0	102.961	AT/MT	2000	198210	199308	ME-124R	201 350 80 10	MEIU-124	201 350 08 13	MEIU-124	201 350 08 13
E 2.0	102.962	AT/MT	2000	198210	199308	ME-124R	201 350 80 10	MEIU-124	201 350 08 13	MEIU-124	201 350 08 13
E 2.3	102.985	AT/MT	2300	198210	199308	ME-124R	201 350 80 10	MEIU-124	201 350 08 13	MEIU-124	201 350 08 13
E-CLASS 124											
200	102.922	AT/MT	2000	198412	199306	ME-124R	124 350 88 10	MEIU-124	201 350 08 13	MEIU-124	201 350 08 13
200 D	601.912	AT/MT	2000	198412	199306	ME-124R	124 350 88 10	MEIU-124	201 350 08 13	MEIU-124	201 350 08 13
200 E	102.963	AT/MT	2000	198412	199306	ME-124R	124 350 88 10	MEIU-124	201 350 08 13	MEIU-124	201 350 08 13
200 T	102.922	AT/MT	2000	198509	199306	ME-124R	124 350 88 10	MEIU-124	201 350 08 13	MEIU-124	201 350 08 13
200 T D	601.912	AT/MT	2000	198509	199306	ME-124R	124 350 88 10	MEIU-124	201 350 08 13	MEIU-124	201 350 08 13
200 TE	102.962	AT/MT	2000	198509	199306	ME-124R	124 350 88 10	MEIU-124	201 350 08 13	MEIU-124	201 350 08 13
200 TE	102.963	AT/MT	2000	198509	199306	ME-124R	124 350 88 10	MEIU-124	201 350 08 13	MEIU-124	201 350 08 13
230 CE	102.982	AT/MT	2300	198703	199305	ME-124R	124 350 88 10	MEIU-124	201 350 08 13	MEIU-124	201 350 08 13
230 E	102.982	AT/MT	2300	198412	199306	ME-124R	124 350 88 10	MEIU-124	201 350 08 13	MEIU-124	201 350 08 13
230 TE	102.982	AT/MT	2300	198509	199306	ME-124R	124 350 88 10	MEIU-124	201 350 08 13	MEIU-124	201 350 08 13
250 D	602.912	AT/MT	2500	198412	199306	ME-124R	124 350 88 10	MEIU-124	201 350 08 13	MEIU-124	201 350 08 13
250 T D	602.912	AT/MT	2500	198509	199306	ME-124R	124 350 88 10	MEIU-124	201 350 08 13	MEIU-124	201 350 08 13
VIANO											
	1.8L	MT	1800	199602		ME-801A48	000 330 00 36	VWIU-5023	6383341734	VWIU-5023	6383341734
	2.4L	MT	2400	199612		ME-801A48	000 330 00 36	VWIU-5023	6383341734	VWIU-5023	6383341734
108 DIESEL	2.3L	MT	2300	199602		ME-801A48	000 330 00 36	VWIU-5023	6383341734	VWIU-5023	6383341734
V200	2.0L	AT/MT	2000	199602		ME-801A48	000 330 00 36	VWIU-5023	6383341734	VWIU-5023	6383341734
V220 CDI	2.2L TD	AT/MT	2200	199602		ME-802A48	000 330 18 85	MEIU-5002	6383342334	MEIU-5002	6383342334
V230	2.3L	AT/MT	2300	199602		ME-801A48	000 330 00 36	VWIU-5023	6383341734	VWIU-5023	6383341734
V230	2.3 TD	AT/MT	2300	199602		ME-801A48	000 330 00 36	VWIU-5023	6383341734	VWIU-5023	6383341734
VITO											
	1.8L	MT	1800	199602		ME-801A48	000 330 00 36	VWIU-5023	6383341734	VWIU-5023	6383341734
108 CDI	2.2L TD	AT/MT	2200	199602		ME-802A48	000 330 18 85	MEIU-5002	6383342334	MEIU-5002	6383342334
108 D	2.3L D	AT/MT	2300	199602		ME-801A48	000 330 00 36	VWIU-5023	6383341734	VWIU-5023	6383341734
110 CDI	2.2L TD	AT/MT	2200	199602		ME-801A48	000 330 00 36	VWIU-5023	6383341734	VWIU-5023	6383341734
110 D	2.3 TD	AT/MT	2300	199602		ME-801A48	000 330 00 36	VWIU-5023	6383341734	VWIU-5023	6383341734
112 CDI	2.2L TD	AT/MT	2200	199602		ME-802A48	000 330 18 85	MEIU-5002	6383342334	MEIU-5002	6383342334
113	2.0L	AT/MT	2000	199602		ME-801A48	000 330 00 36	VWIU-5023	6383341734	VWIU-5023	6383341734
114	2.3L	AT/MT	2300	199602		ME-801A48	000 330 00 36	VWIU-5023	6383341734	VWIU-5023	6383341734
ML (163)											
230	2.3L	AT/MT	2300	199806		ME-163A48	1633300501	MEIU-163	1633300501	MEIU-163	1633300401
230 CDI	2.3L CDI	AT/MT	2300	199906		ME-163A48	1633300501	MEIU-163	1633300501	MEIU-163	1633300401
320	3.2L	AT/MT	3200	199806		ME-163A48	1633300501	MEIU-163	1633300501	MEIU-163	1633300401
430	4.3L	AT/MT	4300	199906		ME-163A48	1633300501	MEIU-163	1633300501	MEIU-163	1633300401
G463											
G 230	2.3L	AT/MT	2300	199106	199406	ME-460A54	C006015034				
250 GD	2.5L	AT/MT	2500	199106	199206	ME-460A54	C006015034				
G 300	3.0L	AT/MT	3000	199006	199406	ME-460A54	C006015034				
G 300 D	3.0L	AT/MT	3000	199006	199406	ME-460A54	C006015034				
G 300 TD	3.0L	AT/MT	3000	199606		ME-460A54	C006015034				
G 320	3.2L	AT/MT	3200	199706		ME-460A54	C006015034				
G 350 TD	3.5L	AT/MT	3500	199206	199606	ME-460A54	C006015034				

MITSUBISHI

MODEL	ENGINE	AT/MT	CC	YEAR	YEAR	OUTER	O.E No.R	INNER R	O.E No.IR	INNER L	O.E No.IL
AIRTREK											
CU2W	4G63	4AT/I	2000	200103	200204	MT-44A43	MR498974				
CU2W	4G63	4AT/I	2000	200103	200204	MT-44A43	MR580850				
CU2W	4G63	4AT/I	2000	200205	200302	MT-44A43	MN156464				
CU2W	4G63	4AT/I	2000	200205	200302	MT-44A43	MN156464				
CU2W	4G63	4AT/I	2000	200303	200306	MT-44A43	MN156464				
CU2W	4G63	4AT/I	2000	200303	200306	MT-44A43	MN156464				
CU2W	4G63	4AT/I	2000	200307		MT-44A43	MR580850				
CU2W 4WD	4G63	5AT/I	2000	200205	200302	MT-38A43	MN156498				
CU2W 4WD	4G63	5AT/I	2000	200205	200302	MT-38A43	MR580864				
CU2W 4WD	4G63	4AT/I	2000	200103	200204	MT-38A43	MR581558				
CU2W 4WD	4G63	4AT/I	2000	200205	200302	MT-38A43	MR581558				
CU2W 4WD	4G63	4AT/I	2000	200303		MT-38A43	MN156466				
CU2W 4WD	4G63 TBO	5AT/I	2000	200303	200312	MT-38A43	MN156498				
CU2W 4WD	4G63 TBO	5AT/I	2000	200303	200312	MT-38A43	MR580864				
CU2W 4WD	4G63 TBO	5AT/I	2000	200401		MT-38A43	MR580864				
CU4W	4G64	4AT/I	2400	200212	200302	MT-44A43	MN147042				
CU4W	4G64	4AT/I	2400	200212	200302	MT-44A43	MR580470				
CU4W	4G64	4AT/I	2400	200303		MT-44A43	MN156490				
CU4W	4G64	4AT/I	2400	200303		MT-44A43	MR580470				
CU4W	4G64	4AT/I	2400	200103	200204	MT-44A43	MR498974				
CU4W	4G64	4AT/I	2400	200205	200302	MT-44A43	MR498974				
CU4W	4G64	4AT/I	2400	200205	200302	MT-44A43	MR498974				
CU4W	4G64	4AT/I	2400	200303		MT-44A43	MN156464				
CU4W 4WD	4G64	4AT/I	2400	200103	200204	MT-38A43	MR581558				
CU4W 4WD	4G64	4AT/I	2400	200205	200302	MT-38A43	MR581558				
CU4W 4WD	4G64	4AT/I	2400	200303		MT-38A43	MN156466				
CU4W 4WD	4G64	4AT/I	2400	200212	200302	MT-38A43	MR581558				
CU4W 4WD	4G64	4AT/I	2400	200212	200302	MT-38A43	MR580862				
CU4W 4WD	4G64	4AT/I	2400	200212	200302	MT-38A43	MR580778				
CU4W 4WD	4G64	4AT/I	2400	200212	200302	MT-38A43	MR580896				
CU4W 4WD	4G64	4AT/I	2400	200303		MT-38A43	MN580862				
CU4W 4WD	4G64	4AT/I	2400	200303		MT-38A43	MR580862				
CU4W 4WD	4G64	4AT/I	2400	200303		MT-38A43	MR580896				
CU5W	4G69	4AT/I	2400	200401		MT-44A43	MR580850				
CU5W 4WD	4G69	4AT/I	2400	200401		MT-38A43	MN180244				
BRAVO											
U 42 4WD	3G83	MT/AT	660	199012			MR166028				
CARISMA											
DA1A	4G92	MT	1600	199507	200612	MT-801A43	MR110029	MTIR-DA1	MR911574	MTIL-DA1	MR911575
DA1A	4G92	MT	1600	199903	200006	MT-10A43	MR377296	MTIR-DA1	MR911574	MTIL-DA1	MR911575
DA2A	4G93	MT	1800	199507	200612	MT-801A43	MR110029	MTIR-DA1	MR911574	MTIL-DA1	MR911575
DA2A	4G93	MT	1800	199507	200612	MT-801A43	MR110029	MTIR-DA1	MR911574	MTIL-DA1	MR911575
DA2A GDI	4G93	MT	1600	199711	199905	MT-801A43	MR910298	MTIU-DAG	MR911163	MTIU-DAG	MR911163
DA6A	4G13	MT	1300	199507	200612	MT-10A43	MR377296	MTIR-DA1	MR911574	MTIL-DA1	MR911575
DA1A	4G92	AT	1600	199507	200612	MT-801A43	MR110029	MTIU-DAG	MR911163	MTIU-DAG	MR911163
DA1A	4G92	AT	1600	199903	200006	MT-10A43	MR377296	MTIU-DAG	MR911163	MTIU-DAG	MR911163
DA2A	4G93	AT	1800	199507	200612	MT-801A43	MR110029	MTIU-DAG	MR911163	MTIU-DAG	MR911163
DA2A	4G93	AT	1800	199507	200612	MT-801A43	MR110029	MTIU-DAG	MR911163	MTIU-DAG	MR911163
DA2A GDI	4G93	AT	1600	199711	199905	MT-801A43	MR110032	MTIU-DAG	MR911163	MTIU-DAG	MR911163
CHALLENGER/PAJERO SPORT/MONTERO SPORT											
K94 4WD	4D56	MT/AT	2500	199606		MT-13	MR276870				
K97 4WD	4M40	5MT	2800	199606			MB620256				
K97 4WD	4M40	4AT	2800	199606		MT-13	MR276870				
K96 4WD	6G72	4AT	3000	199606		MT-13	MR276860				
K99 4WD	6G74	4AT	3500	199606		MT-14	MR276860				
CHARIOT/GRANDIS/SPACE WAGON											
N84W	4G64	4AT	2400	199710		MT-N84A43	MR357126	MTIU-EA5A	MN171196	MTIL-N84	MN171195
N84W	4G64	MT	2400	199710		MT-N84A43	MR357122	MTIR-N84M	MR483336	MTIL-N84	MN171195
N84W	4G64	4AT	2400	199710		MT-N84A43	MR357122	MTIU-EA5A	MR399371	MTIU-EA5A	MR399371
N84W	4G64	MT	2400	199710		MT-N84A43	MR357122	MTIR-GRM	MN171194	MTIU-EA5A	MR399371
N84W	4G64	4AT	2400	199807		MT-N84A43	MR453992				
N84W	4G64	4AT	2400	199807		MT-N84A43	MR453994				
N84W	4G64	4AT	2400	200212		MT-N84A43	MN110632				
N94W 4WD	4G64	4AT	2400	199710		MT-N94A43	MR290408	MTIU-N94	MR336596	MTIU-N94	MR336596
N94W 4WD	4G64	MT	2400	199710		MT-N94A43	MR336084	MTIU-N94	MR336596	MTIU-N94	MR336596
N94W 4WD	4G64	4AT	2400	199710		MT-N94A43	MR336084	MTIU-N94	MR336596	MTIU-N94	MR336596
CHARIOT/SPACE WAGON											
D02W	G32B	MT	1600	198301	198405	MT-04	MB176865				
D02W	G32B	MT	1600	198406	198608	MT-04	MB297662				
D02W	G32B	MT	1600	198406	198608	MT-04	MB297662				
D03W	G62B	MT/AT	1800	198301	198405	MT-04	MB176867				
D03W	G62BTBO	MT/AT	1800	198406	198608	MT-06	MB297678				
D05W	G37B	MT/AT	1800	198609	199103	MT-04	MB297692				
D09W	4D65	MT	1800	198609	199103	MT-05	MB526533				
D05W	G37B	MT/AT	1800	198401	198601	MT-04	MB297662				
D05W	G37B	MT/AT	1800	198601	199101	MT-04	MB297662				
D09W	4D65	MT/AT	1800	198401	198601	MT-05	MB176872				
D09W	4D65	MT/AT	1800	198609	199103	MT-05	MB526533				

MITSUBISHI

MODEL	ENGINE	AT/MT	CC	YEAR	YEAR	OUTER	O.E No.R	INNER R	O.E No.IR	INNER L	O.E No.IL
D08W	G63B	MT/AT	2000	198609	199103		MB526445				
N33W	4G63	MT/AT	2000	199409	199604		MR110406	MTIU-5008	MB837166	MTIU-5008	MB837166
N33W	4G63	MT/AT	2000	199103	199604	MT-09	MB837426	MTIU-5008	MB837166	MTIU-5008	MB837166
N33W	4G63	MT/AT	2000	199308	199604	MT-09	MB837184	MTIU-5008	MB837166	MTIU-5008	MB837166
N33W	4G63	MT/AT	2000	199205	199404	MT-09	MB837184	MTIU-5008	MB837166	MTIU-5008	MB837166
N43W 4WD	4G63	MT/AT	2000	199105	199204	MT-09	MB837434				
N43W 4WD	4G63	MT/AT	2000	199204	199604	MT-09	MR110406				
N38W	4D68	MT/AT	2000	199206	199406		MR196872				
N38W	4D68	MT/AT	2000	199406	199604		MR196872				
N48W 4WD	4D68	MT/AT	2000	199206	199604		MR110212				
D08W 4WD	G63B	MT/AT	2000	198401	198601	MT-06	MB297699				
N33W	4G63	MT/AT	2000	199105	199205	MT-09	MB837426	MTIU-5008	MB837166	MTIU-5008	MB837166
N33W	4G63	MT/AT	2000	199206	199710	MT-09	MB837184	MTIU-5008	MB837166	MTIU-5008	MB837166
N33W	4G63	MT/AT	2000	199405	199710	MT-09	MR110406	MTIU-5008	MB837166	MTIU-5008	MB837166
N43W 4WD	4G63	MT/AT	2000	199105	199205	MT-09	MB837426				
N43W 4WD	4G63	MT/AT	2000	199206	199710	MT-09	MB837184				
N43W 4WD	4G63	MT/AT	2000	199206	199710	MT-09	MR110406				
N48W 4WD	4D68	MT/AT	2000	199206	199407		MR110208				
N48W 4WD	4D68	MT/AT	2000	199408	199710		MR196872				
N34W	4G64	AT	2400	199308	199604		MR232154				
N44W 4WD	4G64	AT	2400	199308	199604	MT-09	MR110406				
N34W	4G64	4AT	2400	199303	199710	MT-09	MR110402				
N44W 4WD	4G64	4AT	2400	199303	199710	MT-09	MR110402				

COLT

Z25A	4G19	CVT	1300	200210		MT-41	MR980744				
Z26A 4WD	4G19	CVT	1300	200211		MT-43	MR980746				
Z27A	4G15	CVT	1500	200210		MT-41	MR980744				
Z28A	4G15	CVT	1500	200211		MT-43	MR980746				
Z32	3A91	5MT	1100	200408	200604	MT-Z36	MR980748		3815A014		3815A014
Z32	3A91	5MT	1100	200604		MT-Z36	MR582022		3815A014		3815A014
Z34	4A90	5MT	1300	200404		MT-Z36	MR980748		3815A013		3815A013
Z34	4A90	6MT	1300	200404		MT-Z36	MR980748		3815A014		3815A014
Z36	4A91	5MT	1500	200603		MT-Z36	MR582022		3815A014		3815A014

CORDIA

A212	G32B	MT/AT	1600	198201	198401	MT-04	MB176865				
A212	G32B TBO	MT/AT	1600	198201	198401	MT-05	MB176872				
A212	G32B	MT/AT	1600	198401	198801	MT-04	MB297662				
A212	G32B	MT/AT	1600	198401	198801	MT-04	MB297662				
SE SX	G62B	MT/AT	1800	198201	198401	MT-04	MB176867				
A213	G62B TBO	MT/AT	1800	198301	198401	MT-05	MB297385				
A213	G62B TBO	MT/AT	1800	198401	198501	MT-06	MB297678				
A213	G62B TBO	MT/AT	1800	198401	198701	MT-04	MB297999				

DEBONAIR

S11A	6G71	AT	2000	198608	198908	MT-17	MB526404				
S11A	6G71	AT	2000	198909	199104	MT-17	MB620812				
S11A	6G71	AT	2000	199105	199207		MB886702				
S12A	6G72	AT	3000	198607	199207	MT-17	MB886846				
S12A	6G72	AT	3000	198607	199207	MT-16	MB620808				
S22A	6G72	AT	3000	199208	199508	MT-22	MB886260				
S22A	6G72	AT	3000	199208	199508	MT-16	MR110886				
S27A	6G74	AT	3500	199208	199508	MT-22	MR886260				
S27A	6G74	AT	3500	199208	199508	MT-16	MR110886				

DELICA/SPACEGEAR

PD4 4WD	4G64	AT	2400	199403	199508	MT-13	MB896948				
PD5 4WD	4D56	AT	2500	199403	199508	MT-13	MB896948				
PD5 4WD	4D56	MT	2500	199403	199508	MT-13	MB896952				
P25 4WD	4D56	5FMT	2500	199403	199510	MT-13	MB620252				
P25 4WD	4D56	5FMT	2500	199511	199708	MT-13	MR276874				
P25 4WD	4D56	5FMT	2500	199709		MT-13	MR276870				
PD8 4WD	4M40	AT	2800	199403	199508		MB896948				
PD8 4WD	4M40	MT	2800	199403	199508		MB896952				
PE8 4WD	4M40	AT	2800	199403	199508		MB896948				
PE8 4WD	4M40	MT	2800	199403	199508		MB896952				
PF8 4WD	4M40	AT	2800	199403	199508		MB896948				
PF8 4WD	4M40	MT	2800	199403	199508		MB896952				
PD6 4WD	6G72	AT	3000	199403	199508	MT-13	MB896948				
PF6 4WD	6G72	AT	3000	199403	199508	MT-13	MB896948				

DELICA CARGO

SK56M 4WD	WL	MT/AT	2500	199910			MQ901082				
SK56M 4WD	WL	MT/AT	2500	199910			MQ901079				

DELICA VAN/DELICA WAGON

P23 4WD	G63B	MT/AT	2000	198604	199406	MT-13	MB526145				
P23 4WD	G63B	MT/AT	2000	198604	199406	MT-13	MB526145				
P24 4WD	4G64	MT/AT	2400	198908	199406	MT-13	MB526145				
P25 4WD	4D56	MT/AT	2500	198604	199406	MT-13	MB526145				
P45 4WD	4D56	MT	2500	199008	199406	MT-13	MB526145				
P35 4WD	4D56	MT/AT	2500	198908	199406	MT-13	MB526145				
P25 4WD	4D56	MT/AT	2500	198604	199406	MT-13	MB526142				

DERICA TRUCK

MITSUBISHI

MODEL	ENGINE	AT/MT	CC	YEAR	YEAR	OUTER	O.E No.R	INNER R	O.E No.IR	INNER L	O.E No.IL
SK22L 4WD	R2	5MT	2200	199910			MQ901072				
DERICA VAN/DERICA WAGON											
SK22M 4WD	R2	MT/AT	2200	199910			MQ901074				
SK22M 4WD	R2	MT/AT	2200	199910			MQ901072				
DIAMANTE											
F11A	6G71	MT/AT	2000	199005	199109	MT-18	MB526522	MTIU-5023	MB837318		
F11A	6G71	MT/AT	2000	199110	199501	MT-18	MB886252	MTIU-5023	MB837318		
F12A	6A12	MT/AT	2000	199209	199501	MT-18	MB936700	MTIU-5023	MB837318		
F13A	6G73	AT	2500	199005	199109	MT-16	MB620752				
F13A	6G73	AT	2500	199110	199501	MT-18	MB886256				
F13A	6G73	AT	2500	199209	199309	MT-22	MB886260				
F13A	6G73	MT	2500	199005	199109	MT-18	MB620482				
F13A	6G73	MT	2500	199110	199501	MT-03A43	MB886254				
F15A 4WS	6G73	AT	2500	199005	199109	MT-22	MB620754				
F15A 4WS	6G73	AT	2500	199110	199311	MT-22	MB886260				
F25A 4WD	6G73	AT	2500	199005	199109	MT-23	MB620702				
F25A 4WD	6G73	AT	2500	199110	199501	MT-23	MB886266				
F31A	6G73	4AT	2500	199501			MR196412			MTIU-5022	MR246494
F31A	6G73	4AT	2500	199501			MR196416			MTIU-5022	MR246494
F31A	6G73	5AT	2500	199501			MR196412			MTIU-5022	MR246494
F31A	6G73	5AT	2500	199501			MR196416			MTIU-5022	MR246494
F41A 4WD	6G73	4AT	2500	199501			MR176914				
F41A 4WD	6G73	4AT	2500	199501			MR176916				
F41A 4WD	6G73	5AT	2500	199501			MR176920				
F17A	6G72	AT	3000	199005	199109	MT-16	MB620758				
F17A	6G72	AT	3000	199110	199501	MT-16	MR110886				
F27A 4WD	6G72	AT	3000	199005	199109	MT-23	MB620702				
F27A 4WD	6G72	AT	3000	199110	199501	MT-23	MB886266				
F36A	6G72	AT	3000	199501			MR176368				
F46A 4WD	6G72	AT	3000	199501			MR176920				
F47A 4WD	6G72	AT	3000	199501			MR176920				
DION											
CR9W	4G63	4AT	2000	200001			MR518372				
CR6W4WD	AG94	4AT	2000	200007			MR528074				
ECLIPSE											
D22A	4G63	MT/AT	2000	198909	199506	MT-03	MB297872				
D27A	4G63	AT	2000	198909	199506		MB620314				
D27A	4G63	MT	2000	198909	199506	MT-09	MB526438				
D32A	4G63	AT	2000	199506	199604		MR165592				
D32A	4G63	AT	2000	199506	199604		MR165594				
D32A	4G63	MT	2000	199506	199604		MR165588				
D32A	4G63	MT	2000	199506	199604		MR165590				
EMERAUDE/GALANT/ETERNA											
E52A	4G91	MT/AT	1800	199205	199610	MT-03	MB837698				
E52A	4G91	MT/AT	1800	199205	199610	MT-10A43	MB896218				
E53A	6A11	MT/AT	1800	199205	199610	MT-03	MB936772				
E53A	6A11	MT/AT	1800	199205	199610	MT-03A43	MB936774				
E72A 4WD	4G93	MT/AT	1800	199205	199610	MT-09	MB837708	MTIU-5008	MB837166		
E72A 4WD	4G93	MT/AT	1800	199205	199610	MT-09A43	MB896316	MTIU-5008	MB837166		
E54A	6A12	MT/AT	2000	199205	199402	MT-03	MB896788				
E54A	6A12	MT/AT	2000	199205	199402	MT-03A43	MB896790				
E54A	6A12	MT/AT	2000	199403	199610	MT-03	MB936772				
E54A	6A12	MT/AT	2000	199403	199610	MT-03A43	MB936774				
E64A 4WS	6A12	MT/AT	2000	199205	199610	MT-03	MB896788				
E64A 4WS	6A12	MT/AT	2000	199205	199610	MT-03A43	MB896790				
E74A 4WD	6A12	AT	2000	199302	199610	MT-09	MB936364	MTIU-5008	MB837166		
E74A 4WD	6A12	AT	2000	199302	199610	MT-09A43	MB936366	MTIU-5008	MB837166		
E74A 4WD	6A12	MT	2000	199302	199610	MT-09	MB936360				
E74A 4WD	6A12	MT	2000	199302	199610	MT-09A43	MB936362				
E84A 4WD	6A12	AT	2000	199205	199610	MT-09	MB936364	MTIU-5008	MB837166		
E84A 4WD	6A12	AT	2000	199205	199610	MT-09A43	MB936366	MTIU-5008	MB837166		
E84A 4WD	6A12	MT	2000	199205	199610	MT-09	MB936360				
E84A 4WD	6A12	MT	2000	199205	199610	MT-09A43	MB936362				
E57A	4D68	MT/AT	2000	199205	199610	MT-15	MB896214	MTIU-5032	MB937996	MTIU-5032	MB937996
E57A	4D68	MT/AT	2000	199205	199610	MT-15A43	MB896216	MTIU-5032	MB937996	MTIU-5032	MB937996
E77A 4WD	4D68	MT/AT	2000	199205	199610	MT-09	MB886436	MTIU-5008	MB837166		
E77A 4WD	4D68	MT/AT	2000	199205	199310	MT-09A43	MB936530	MTIU-5008	MB837166		
E77A 4WD	4D68	MT/AT	2000	199311	199610	MT-09A43	MB936530	MTIU-5008	MB837166		
E77A 4WD	4D68	MT/AT	2000	199311	199610	MT-09A43	MB936530	MTIU-5008	MB837166		
E77A 4WD	4D68	MT/AT	2000	199205	199310	MT-09A43	MB936530	MTIU-5008	MB837166		
FTO											
DE2A	4G93	MT/AT	1800	199410			MR196480				
DE2A	4G93	MT/AT	1800	199410			MR196482				
DE3A	6A12	AT	2000	199410			MR145814				
DE3A	6A12	AT	2000	199410			MR145820				
DE3A	6A12	MT	2000	199410			MR165064				
DE3A	6A12	MT	2000	199410			MR165068				
GALANT/ETERNA											
E11A	G32B	MT	1600	198402	198709	MT-04	MB526444				

MITSUBISHI

MODEL	ENGINE	AT/MT	CC	YEAR	YEAR	OUTER	O.E No.R	INNER R	O.E No.IR	INNER L	O.E No.IL
E31A	4G32	MT/AT	1600	198708	199209	MT-04	MB297874				
E31A	4G32	MT/AT	1600	198708	199209	MT-04	MB297874				
E12A	G37B	4AT	1800	198308	198512	MT-05	MB526454				
E12A	G37B	4AT	1800	198601	198904	MT-04	MB526444				
E12A	G37B	MT/AT	1800	198308	198904	MT-04	MB526444				
E13A	G62B	MT/AT	1800	198308	199012	MT-05	MB526454				
E32A	4G37	AT	1800	198708	199209	MT-12	MB526614				
E32A	4G37	MT	1800	198708	199209	MT-12	MB526558				
E32A	4G37 ECI	MT/AT	1800	198708	199209	MT-03	MB297992				
E35A	4G67	MT/AT	1800	198904	199209	MT-03	MB297872				
E37A	4G37	AT	1800	198809	199209		MB620314				
E14A	4D65	AT	1800	198403	198709	MT-05	MB297561				
E14A	4D65	MT	1800	198403	198709	MT-05	MB526455				
E34A	4D65 TBO	AT	1800	198802	199209	MT-11	MB297982				
E34A	4D65 TBO	MT	1800	198802	199209	MT-03	MB526012				
E34A	4D65	AT	1800	198802	199209	MT-11	MB297982				
E37A	4G37	MT	1800	198809	199209	MT-09	MB526438				
E37A	4G37	AT	1800	198809	199209	MT-09	MB526438	MTIU-5008	MB837166	MTIU-5008	MB837166
EA1A	4G93	5MT	1800	199608		MT-29	MR305772				
EA1A	4G93	5MT	1800	199608		MT-29	MR305772				
EA1A	4G93	4AT	1800	199608		MT-29	MR196750				
EA1A	4G93	4AT	1800	199608		MT-29	MR196750				
E15A	G63B	MT/AT	2000	198308	199011	MT-05	MB526454				
E15A	G63B TBO	MT/AT	2000	198405	199011	MT-06	MB526473				
E17A	6G71	MT/AT	2000	198610	199012	MT-17	MB526406				
E33A	4G63	MT/AT	2000	198708	199209	MT-03	MB297872				
E38A	4G63 TBO	MT	2000	198802	199209	MT-09	MB526438				
E39A	4G63	AT	2000	198709	199209	MT-09	MB620314	MTIU-5008	MB837166	MTIU-5008	MB837166
E39A	4G63	MT	2000	198709	199209	MT-09	MB526438				
E33A	4G63	MT/AT	2000	198701	199209	MT-10	MB526909				
E39A 4WD	4G63	MT	2000	198701	199209	MT-09	MB526914				
E55A	4G63	MT/AT	2000	199301	199712	MT-15	MB896526	MTIU-5032	MB937996	MTIU-5032	MB937996
E55A	4G63	MT/AT	2000	199301	199712	MT-15	MR111854	MTIU-5032	MB937996	MTIU-5032	MB937996
EA2A	4G63	MT/AT	2000	199609		MT-33A43	MR317132	MTIU-EA5A	MR336586	MTIU-EA5A	MR336586
EA2A	4G63	MT/AT	2000	199609		MT-33A43	MN156276	MTIU-EA5A	MR336586	MTIU-EA5A	MR336586
EA3A	4G64	MT/AT	2400	199609		MT-33A43	MN156276	MTIU-EA5A	MR336586	MTIU-EA5A	MR336586
EA3A	4G64	MT/AT	2400	199609		MT-33A43	MR317132	MTIU-EA5A	MR336586	MTIU-EA5A	MR336586
EA3A USA TYPE	4G64	AT	2400	199802	200307		MR196738	MTIU-USEA	MR470021	MTIU-USEA	MR470021
EA5A	6A13	MT/AT	2500	199609		MT-33A43	MR196758	MTIU-EA5A	MR336586	MTIU-EA5A	MR336586
EA5A	6A13	MT/AT	2500	199609		MT-33A43	MN156278	MTIU-EA5A	MR336586	MTIU-EA5A	MR336586
EC5A 4WD	6A13	MT/AT	2500	199608		MT-34A43	MR246170				
EC5A 4WD	6A13	MT/AT	2500	199608		MT-34A43	MR246170				
E18A	6G72	AT	3000	198905	199011	MT-17	MB526406				
L200											
KB4T	4D56 DI-D	AT/MT	2500	200512		MT-KB4A47	3815A182				
KB5T	4G64	5MT	2400	200608		MT-KB4A47	3815A182				
KB7T	4M40	5MT	2800	200708		MT-KB4A47	3815A182				
KB8T	4M41	AT/MT	3200	200505		MT-KB4A47	3815A182				
KB9T	6G74	AT/MT	3500	200603		MT-KB4A47	3815A182				
LANCER											
CY2A	4A91	MT	1500	200706		MT-CY2	3815A170		3815A170		3815A169
CY3A	4B10	MT	1800	200712		MT-CY3	3815A190		3815A190		3815A189
CY3A	4B10	AT	1800	200712		MT-CY3	3815A108		3815A108		3815A107
LANCER CEDIA WAGON											
CS2W	4G15	CVT	1500	200105		MT-37A43	MR528566				
CS5W	4G93	CVT	1800	200011		MT-35A43	MR528570				
CS5W	4G93	CVT	1800	200011		MT-35A43	MR953584				
CS5W	4G93 TBO	4AT	1800	200105		MT-38A43	MR567160				
CS5W 4WD	4G93	CVT	1800	200011		MT-36A43	MR553010	MTIU-808	MR331245	MTIU-808	MR331245
LANCER CEDIA											
CS1A	4G13	MT/AT	1300	200003	200212	MT-38	MR567002				
CS1A	4G13	MT/AT	1300	200003	200212	MT-38	MR580376				
CS2A	4G15	CVT	1500	200005		MT-37A43	MR528566				
CS2A	4G15	5MT	1500	200005		MT-37A43	MR567004				
CS2A 4WD	4G15	CVT	1500	200007		MT-38A43	MR498556				
CS5A	4G93	CVT	1800	200005		MT-35A43	MR528570				
CS5A 4WD	4G93	CVT	1800	200007		MT-36A43	MR553010	MTIU-808	MR331245	MTIU-808	MR331245
CS6A	4G94	AT	2000	200106		MT-808	MR580575	MTIU-808	MR331245	MTIU-808	MR331245
LEGNUM											
EA1W	4G93	5MT	1800	199608		MT-29	MR305772				
EA1W	4G93	5MT	1800	199608		MT-29	MR305772				
EA1W	4G93	4AT	1800	199608		MT-29	MR196750				
EA1W	4G93	4AT	1800	199608		MT-29	MR196750				
EA4W	6A12	MT/AT	2000	199608		MT-29	MR196750				
EA4W	6A12	MT/AT	2000	199608		MT-29	MR196750				
EC4W 4WD	6A12	MT/AT	2000	199608		MT-32A43	MR305602				
EC4W 4WD	6A12	MT/AT	2000	199608		MT-32A43	MR305602				
EA5W	6A13	MT/AT	2500	199608		MT-33A43	MR196758	MTIU-EA5A	MR336586	MTIU-EA5A	MR336586

MITSUBISHI

MODEL	ENGINE	AT/MT	CC	YEAR	YEAR	OUTER	O.E No.R	INNER R	O.E No.IR	INNER L	O.E No.IL
EC5W 4WD	6A13	MT/AT	2500	199608		MT-32A43	MR305602				
EC5W 4WD	6A13	5MT	2500	199608		MT-34A43	MR246170				
EC5W 4WD	6A13	5AT	2500	199608		MT-34A43	MR246170				
LIBERO/LIBERO CARGO											
CB1V	4G13	MT/AT	1300	199205	199508	MT-12	MB886540				
CB1V	4G13	MT/AT	1300	199205	199508	MT-12	MB837400				
CB1V	4G13	MT/AT	1300	199205	199508	MT-12A43	MB620394				
CB2	4G15	MT/AT	1500	199205	199508	MT-12	MB886540				
CB2	4G15	MT/AT	1500	199205	199508	MT-12	MB837400				
CB2	4G15	MT/AT	1500	199205	199508	MT-12A43	MB620394				
CD2 4WD	4G15	MT/AT	1500	199205	199508		MB837432				
CD2 4WD	4G15	MT/AT	1500	199205	199508		MB886240				
CB5W	4G93	MT/AT	1800	199205	199508	MT-09	MB837264				
CB5W	4G93	MT/AT	1800	199205	199508	MT-10A43	MB837262				
CD5W 4WD	4G93	MT/AT	1800	199205	199508	MT-09	MB837600				
CD5W 4WD	4G93	MT/AT	1800	199205	199508		MB886240				
CB8VW	4D68	AT	2000	199206	199508	MT-03	MB837266				
CB8VW	4D68	AT	2000	199206	199508	MT-03A43	MB837402				
CB8VW	4D68	MT	2000	199206	199508		MR110190				
CB8VW	4D68	MT	2000	199206	199508		MR110194				
CB8VW	4D68 TBO	AT	2000	199206	199508	MT-03	MR176640				
CB8VW	4D68 TBO	AT	2000	199206	199508	MT-03A43	MR176642				
CB8VW	4D68 TBO	MT	2000	199206	199508	MT-03	MR176648				
CB8VW	4D68 TBO	MT	2000	199206	199508	MT-03A43	MR176650				
CD8VW4WD	4D68	MT/AT	2000	199206	199508	MT-09	MB837600				
CD8VW4WD	4D68	MT/AT	2000	199206	199508		MB886240				
MINICA											
H21A	3G81	MT/AT	550	198901	199003	MT-19	MB620440				
H21A	3G81	MT/AT	550	198908	199009	MT-20	MB620442				
H21V	3G81	MT/AT	550	198901	199003	MT-19	MB620440				
H21V	3G81 TBO	MT	550	198901	198909	MT-20	MB620442				
H26AV4WD	3G81	MT/AT	550	198901	199003	MT-19	MB620440				
H26AV4WD	3G81	MT/AT	550	198908	199010	MT-20	MB620442				
H22A	3G83 TBO	MT/AT	660	199112	199201	MT-19	MB620440				
H22A	3G83 TBO	MT/AT	660	199006	199309	MT-21	MB620012				
H22V	3G83	MT/AT	660	199001	199309	MT-19	MB620440				
H27A 4WD	3G83	MT/AT	660	199002	199309	MT-19	MB620440				
H27A 4WD	3G83	MT/AT	660	199010	199309	MT-21	MB620012				
H27A 4WD	3G83 TBO	MT	660	199008	199309	MT-19	MB620440				
H27A 4WD	3G83 TBO	MT	660	199008	199309	MT-21	MB620012				
H27V 4WD	3G83	MT/AT	660	199002	199309	MT-19	MB620440				
H31A	4A30	MT/AT	660	199309	199508	MT-19	MB936786				
H31A	4A30 TBO	MT/AT	660	199309	199508	MT-21	MB896822				
H32AV	3G83	MT/AT	660	199309	199508	MT-19	MB936786				
H36A 4WD	4A30	MT/AT	660	199309	199508	MT-19	MB936786				
H36A 4WD	4A30 TBO	MT/AT	660	199309	199508	MT-21	MB896822				
H37V 4WD	3G83	MT/AT	660	199309		MT-19	MB936786				
H22A	3G83	MT/AT	660	199001	199309	MT-19	MB620440				
H42A	3G83	MT/AT	660	199810	199908		MR498692				
H47A	3G83	MT/AT	660	199810	199908		MR498692				
H42A	3G83	MT/AT	660	199909			MR534514				
H47A	3G83	MT/AT	660	199909			MR534514				
H42A	3G83	MT/AT	660	199810	199908		MR498690				
H47A	3G83	MT/AT	660	199810	199908		MR498690				
H42A	3G83	MT/AT	660	199909			MR534512				
H47A	3G83	MT/AT	660	199909			MR534512				
MINICAB TRUCK											
U62T 4WD	3G83	5MT	660	199901			MR498933				
U62T 4WD	3G83	5MT	660	199901			MR498931				
U62T 4WD	3G83	3/4AT	660	199901			MR498937				
U62T 4WD	3G83	3/4AT	660	199901			MR498935				
MINICAB VAN											
U 62 W 4 WD	3G83	5MT	660	199901			MR498091				
U 62 W 4 WD	3G83	5MT	660	199901			MR498089				
U 62V 4WD	3G83	3/4AT	660	199901			MR498095				
U 62V 4WD	3G83	3/4AT	660	199901			MR498093				
MINICAB											
U15V/T 4WD	3G81	MT/AT	550	198706	198912		MB620458				
U42V/T 4WD	3G83	MT	660	199012			MB620454				
MIRAGE/DINGO											
CQ1A	4G13	4AT	1300	200001			MR446822				
CQ1A	4G13	4AT	1300	200001		MT-37A43	MR567004				
CQ2A	4G15	4AT	1500	199812			MR446822				
CQ2A	4G15	4AT	1500	199812		MT-37A43	MR567004				
CQ2A 4WD	4G15	4AT	1500	199911			MR498478				
CQ5A	4G93	4AT	1800	200002			MR446024				
CQ5A	4G93	4AT	1800	200002			MR567008				
MIRAGE LANCER VAN/WAGON											
C11V	G13B	MT/AT	1300	198501	199203	MT-04	MB526064	MTIU-004	MB297341	MTIU-004	MB297341

MITSUBISHI

MODEL	ENGINE	AT/MT	CC	YEAR	YEAR	OUTER	O.E No.R	INNER R	O.E No.IR	INNER L	O.E No.IL
C11V	G13B	MT/AT	1300	198501	199203	MT-04	MB526064	MTIU-004	MB297341	MTIU-004	MB297341
C12VW	G15B	MT/AT	1500	198501	199203	MT-04	MB526064	MTIU-004	MB297341	MTIU-004	MB297341
C32V	G15B	MT	1500	198608	199203		MB526490				
C37W	G37B	MT	1800	198608	199010		MB526490				
C14VW	4D65	MT/AT	1800	198501	198805	MT-04	MB526067	MTIU-004	MB297341	MTIU-004	MB297341
C34VW	4D65	MT	1800	198608	199203		MB526490				
C14VW	4D65	MT/AT	1800	198301	198501	MT-04	MB297346	MTIU-004	MB297341	MTIU-004	MB297341
C14VW	4D65	MT/AT	1800	198806		MT-05	MB526350				
MIRAGE/LANCER											
C11A	G13B	AT	1300	198310	198512	MT-04	MB297344	MTIU-004	MB297341	MTIU-004	MB297341
C61A	4G13	MT/AT	1300	198801	199108	MT-04	MB526582	MTIU-004	MB297341	MTIU-004	MB297341
CB1A	4G13	MT/AT	1300	199108	199508	MT-12	MB886540				
CB1A	4G13	MT/AT	1300	199108	199508	MT-12	MB837400				
CB1A	4G13	MT/AT	1300	199108	199508	MT-12A43	MB620394				
C51A	4G13	MT/AT	1300	198710	199108	MT-04	MB526118	MTIU-004	MB297341	MTIU-004	MB297341
C51A	4G13	MT/AT	1300	198710	199108	MT-04	MB526582	MTIU-004	MB297341	MTIU-004	MB297341
CA1A	4G13	MT/AT	1300	199108	199508	MT-12	MB886540				
CA1A	4G13	MT/AT	1300	199108	199508	MT-12	MB837400				
CA1A	4G13	MT/AT	1300	199108	199508	MT-12A43	MB620394				
C11A	G13B	MT	1300	198301	198501	MT-04	MB297348	MTIU-004	MB297341	MTIU-004	MB297341
C11A	G13B	MT/AT	1300	198601	198801	MT-04	MB526067	MTIU-004	MB297341	MTIU-004	MB297341
C51A	4G13	MT/AT	1300	198701	199101	MT-04	MB526582	MTIU-004	MB297341	MTIU-004	MB297341
C61A	4G13	MT/AT	1300	198801	199108	MT-04	MB526118	MTIU-004	MB297341	MTIU-004	MB297341
CK1A	4G13	MT/AT	1300	199510	200007	MT-08	MR222052				
CK1A	4G13	MT/AT	1300	199510	200007		MR263948				
CK1A	4G13	MT/AT	1300	199510	200007	MT-39	MR222960				
CJ1A	4G13	MT/AT	1300	199510	200008		MR263948				
CJ1A	4G13	MT/AT	1300	199510	200008	MT-08	MR222052				
CJ1A	4G13	MT/AT	1300	199510	200008	MT-39	MR222960				
CK1	4G13	MT/AT	1300	199510	200004	MT-39	MR222960				
CK1	4G13	MT/AT	1300	199510	200004	MT-39	MR222962				
C12A	G15B	MT/AT	1500	198601	198806	MT-04	MB526067	MTIU-004	MB297341	MTIU-004	MB297341
C18A	G31B	MT/AT	1500	198604	198806	MT-04	MB526067	MTIU-004	MB297341	MTIU-004	MB297341
C62A	4G15	MT/AT	1500	198801	199108	MT-04	MB526118	MTIU-004	MB297341	MTIU-004	MB297341
C62A	4G15	MT/AT	1500	198801	199108	MT-04	MB526582	MTIU-004	MB297341	MTIU-004	MB297341
C72A 4WD	4G15	MT/AT	1500	198801	199108	MT-04	MB526548	MTIU-004	MB297341	MTIU-004	MB297341
CB2A	4G15	MT/AT	1500	199108	199508	MT-12	MB886540	MTIU-004	MB936148	MTIU-004	MB936148
CB2A	4G15	MT/AT	1500	199108	199508	MT-12	MB837400	MTIU-004	MB936148	MTIU-004	MB936148
CB2A	4G15	MT/AT	1500	199108	199508	MT-12A43	MB620394	MTIU-004	MB936148	MTIU-004	MB936148
CB3A	4G91	MT/AT	1500	199108	199508	MT-12	MB886540				
CB3A	4G91	MT/AT	1500	199108	199508	MT-12	MB837400				
CB3A	4G91	MT/AT	1500	199108	199508	MT-12A43	MB620394				
CD3A 4WD	4G91	MT/AT	1500	199108	199508	MT-12	MB837524				
CD3A 4WD	4G91	MT/AT	1500	199108	199508	MT-09	MB837264				
CD3A 4WD	4G91	MT/AT	1500	199108	199508	MT-09A43	MR165844				
C52A	4G15	MT/AT	1500	198710	199108	MT-04	MB526118	MTIU-004	MB297341	MTIU-004	MB297341
C52A	4G15	MT/AT	1500	198710	199108	MT-04	MB526582	MTIU-004	MB297341	MTIU-004	MB297341
C82A 4WD	4G15	AT	1500	198909	199108	MT-04	MB620770	MTIU-004	MB297341	MTIU-004	MB297341
C82A 4WD	4G15	MT	1500	198909	199108	MT-04	MB526548	MTIU-004	MB297341	MTIU-004	MB297341
CA2A	4G15	MT/AT	1500	199108	199508	MT-12	MB886540				
CA2A	4G15	MT/AT	1500	199108	199508	MT-12	MB837400				
CA2A	4G15	MT/AT	1500	199108	199508	MT-12A43	MB620394				
CA3A	4G91	MT/AT	1500	199108	199508	MT-12	MB886540				
CA3A	4G91	MT/AT	1500	199108	199508	MT-12	MB837400				
CA3A	4G91	MT/AT	1500	199108	199508	MT-12A43	MB620394				
CC3A 4WD	4G91	MT/AT	1500	199108	199508	MT-12	MB837524				
CC3A 4WD	4G91	MT/AT	1500	199108	199508	MT-09	MB837264				
CC3A 4WD	4G91	MT/AT	1500	199108	199508	MT-09A43	MR165844				
C12A	G15B	MT/AT	1500	198301	198501	MT-04	MB297344	MTIU-004	MB297341	MTIU-004	MB297341
C12A	G15B	MT/AT	1500	198601	198801	MT-04	MB526064	MTIU-004	MB297341	MTIU-004	MB297341
C52A	4G15	MT/AT	1500	198701	199101	MT-04	MB526853	MTIU-004	MB297341	MTIU-004	MB297341
C62A	4G15	MT/AT	1500	198701	199101	MT-04	MB526898	MTIU-004	MB297341	MTIU-004	MB297341
CK2A	4G15	MT/AT	1500	199510	200007	MT-08	MR222052				
CK2A	4G15	MT/AT	1500	199510	200007		MR263950				
CK2A	4G15	MT/AT	1500	199510	200007		MR222050				
CK2A	4G15	MT/AT	1500	199510	200007		MR263948				
CK2A	4G15	MT/AT	1500	199510	200007	MT-39	MR222960				
CM2A 4WD	4G15	MT/AT	1500	199510	200007		MR222964				
CM2A 4WD	4G15	MT/AT	1500	199510	200007		MR222966				
CJ2A	4G15	MT/AT	1500	199510	200008		MR263948				
CJ2A	4G15	MT/AT	1500	199510	200008	MT-08	MR222052				
CJ2A	4G15	MT/AT	1500	199510	200008		MR222050				
CJ2A	4G15	MT/AT	1500	199510	200008	MT-39	MR222960				
CJ2A	4G15	MT/AT	1500	199510	200008		MR263950				
CL2A 4WD	4G15	MT/AT	1500	199510	200008		MR222964				
CL2A 4WD	4G15	MT/AT	1500	199510	200008		MR222966				
C13A	G32B	MT/AT	1600	198310	198512	MT-05	MB297375				
C13A	G32B	MT/AT	1600	198310	198512	MT-05	MB297374				
C13A	G32B	MT/AT	1600	198606	198612	MT-05	MB526350				
C63A	4G61	MT	1600	198801	199108	MT-05	MB526666				
C73A 4WD	4G61	AT	1600	198801	199108		MB620614				

MITSUBISHI

MODEL	ENGINE	AT/MT	CC	YEAR	YEAR	OUTER	O.E No.R	INNER R	O.E No.IR	INNER L	O.E No.IL
C73A 4WD	4G61	MT	1600	198801	199108		MB526616				
CB4A	4G92	MT/AT	1600	199210	199410	MT-09	MB837642				
CB4A	4G92	MT/AT	1600	199410	199508	MT-09	MB837264				
CB4A	4G92	MT/AT	1600	199210	199410	MT-09A43	MB886230				
CB4A	4G92	MT/AT	1600	199410	199508	MT-10A43	MB837262				
CB6A	6A10	MT/AT	1600	199201	199508	MT-09	MB837264				
CB6A	6A10	MT/AT	1600	199201	199508	MT-10A43	MB837262				
C53A	4G61	AT	1600	198710	199108	MT-07	MB526544				
C53A	4G61	MT	1600	198710	199108	MT-05	MB526666				
C53A	4G61 TBO	MT	1600	198710	199108		MB526672				
C83A 4WD	4G61	AT	1600	198909	199108		MB620614				
C83A 4WD	4G61	MT	1600	198909	199108		MB526616				
CA4A	4G92	MT/AT	1600	199108	199408	MT-09	MB837642				
CA4A	4G92	MT/AT	1600	199408	199508	MT-09	MB837264				
CA4A	4G92	MT/AT	1600	199108	199408	MT-09A43	MB886230				
CA4A	4G92	MT/AT	1600	199408	199508	MT-10A43	MB837262				
CC4A 4WD	4G92	MT/AT	1600	199108	199508	MT-09	MR165842				
CC4A 4WD	4G92	MT/AT	1600	199108	199508	MT-09A43	MR165844				
A153	G32B	MT/AT	1600	197801	198301	MT-04	MB176161				
C63A	4G61	AT	1600	198701	199101	MT-07	MB526544				
CK4A	4G92	MT/AT	1600	199510		MT-29	MR246960				
CK4A	4G92	MT/AT	1600	199510		MT-29	MR246960				
CK4A	4G92	MT/AT	1600	199510			MR263952				
CK4A	4G92	MT/AT	1600	199510			MR246962				
CJ4A	4G92	MT/AT	1600	199510		MT-29	MR246960				
CJ4A	4G92	MT/AT	1600	199510			MR263952				
CJ4A	4G92	MT/AT	1600	199510			MR246962				
CS3A	4G92	MT	1600	200101		MT-808	MR953745	MTIU-808	MN147159	MTIU-808	MN147159
CS3A	4G92	AT	1600	200101		MT-808	MR953745	MTIR-088	MN147088	MTIU-808	MN147159
CD5A 4WD	4G93	MT/AT	1800	199110	199508	MT-09A43	MR165844				
C14A	4D65	MT	1800	198310	198512	MT-04	MB297346	MTIU-004	MB297341	MTIU-004	MB297341
C14A	4D65	MT	1800	198601	198806	MT-04	MB526067	MTIU-004	MB297341	MTIU-004	MB297341
C64A	4D65	MT/AT	1800	198805	199112	MT-04	MB526582	MTIU-004	MB297341	MTIU-004	MB297341
C74A 4WD	4D65	MT	1800	198805	199112	MT-04	MB526548				
CB7A	4D65	AT	1800	199110	199210	MT-03	MB837266				
CB7A	4D65	AT	1800	199110	199210	MT-03A43	MB837402				
CB7A	4D65	MT	1800	199110	199210	MT-09	MB837264				
CB7A	4D65	MT	1800	199110	199210	MT-10A43	MB837262				
CD7A 4WD	4D65	MT/AT	1800	199110	199210	MT-09	MR165842				
CD7A 4WD	4D65	MT/AT	1800	199110	199210	MT-09A43	MR165844				
CK6	6A11	4AT	1800	199510		MT-29	MR222056				
CK6	6A11	4AT	1800	199510		MT-29	MR222054				
CM5 4WD	4G93	5MT	1800	199510			MR195654				
CM5 4WD	4G93	4AT	1800	199510			MR195654				
CD5A 4WD	4G93	MT/AT	1800	199110	199508	MT-09	MR165842				
CS5AR	4G93	CVT	1800	200101		MT-808	MR953745	MTIU-808	MN147159	MTIU-808	MN147159
CD9A 4WD	4G63	MT/AT	2000	199210	199312	MT-09	MR165842				
CD9A 4WD	4G63	MT/AT	2000	199210	199312	MT-09A43	MR165844				
CS9A	4G63	MT	2000	200101		MT-808	MR953745	MTIR-CSM	MR581875	MTIL-CSM	MR581872
CB8A	4D68	AT	2000	199210	199508	MT-03	MR176640				
CB8A	4D68	AT	2000	199210	199508	MT-03A43	MR176642				
CB8A	4D68	MT	2000	199210	199508	MT-10	MR196868				
CB8A	4D68	MT	2000	199210	199508	MT-10A43	MR196870				
CD8A 4WD	4D68	MT/AT	2000	199210	199508	MT-09	MR165842				
CD8A 4WD	4D68	MT/AT	2000	199210	199508	MT-09A43	MR165844				
CK8A	4D68	MT/AT	2000	199510	200007		MR222094				
CK8A	4D68	MT/AT	2000	199510	200007		MR222096				
CM8A 4WD	4D68	5MT	2000	199510	200007		MR276010				
CM8A 4WD	4D68	5MT	2000	199510	200007		MR276012				
CM8A 4WD	4D68	4AT	2000	199510	200007		MR222964				
CM8A 4WD	4D68	4AT	2000	199510	200007		MR222966				
CS6A	4G94	AT/MT	2000	200101		MT-808	MR953745	MTIU-808	MN147159	MTIU-808	MN147159
OUTLANDER											
CU2W	4G63	5FM/T	2000	200302		MT-44A43	MR580470				
CU2W 4WD	4G63	5FM/T	2000	200302		MT-38A43	MR580474				
CW5W	4B12	5MT	2400	200706	200707	MT-CW5	3815A068		3815A068		3815A065
CW5W 4WD	4B12	CVT	2400	200706		MT-CW5	3815A068		3815A068		3815A065
PAJERO PININ/PAJERO IO											
H76	4G93	4AT	1800	199808		MT-PNA43	MR470226	MTIR-H76	MR470226	MTIL-H76	MR470225
H66	4G93	4AT	1800	199805		MT-PNA43	MR470226				
H76	4G93	5MT	1800	199805		MT-PNA43	MR470226	MTIR-H76	MR470226	MTIL-H76	MR470225
H66	4G93	5MT	1800	199805			MR367166				
H77	4G94	4AT	2000	200006		MT-PNA43	MR470226				
H67	4G94	4AT	2000	200006		MT-PNA43	MR470226				
H77	4G94	5MT	2000	200006		MT-H76A43	MR515192			MTIL-H77A	MR470227
H67	4G94	5MT	2000	200006			MR470228				
PAJERO JUNIOR											
H57A	4A31	MT/AT	1100	199510			MR232396				
PAJERO MINI											
H56A	4A30	MT/AT	660	199412	199607		MR166048				

MITSUBISHI

MODEL	ENGINE	AT/MT	CC	YEAR	YEAR	OUTER	O.E No.R	INNER R	O.E No.IR	INNER L	O.E No.IL
H56A	4A30	MT/AT	660	199412	199607		MR166046				
H58A	4A30 /TBO	5MT	660	199810			MR350178				
H58A	4A30 /TBO	5MT	660	199810			MR567829				
H58A	4A30 /TBO	5MT	660	199810			MR350174				
H58A	4A30 /TBO	5MT	660	199810			MR567825				
H58A	4A30 /TBO	4AT	660	199810			MR350180				
H58A	4A30 /TBO	4AT	660	199810			MR567831				
H58A	4A30 /TBO	4AT	660	199810			MR170176				
H58A	4A30 /TBO	4AT	660	199810			MR567827				
PAJERO											
L043	4D55	MT/AT	2500	198201	198601	MT-14	MB160654				
L044 L144	4D56	MT/AT	2500	198701	199101	MT-13	MB526271	MTIP-5004	MB526147	MTID-5003	MB526146
V34V	4D56	5MT	2500	199101	199307	MT-13	MB620252	MTIP-5004	MB526147	MTID-5003	MB526146
V34V	4D56	5MT	2500	199101	199307	MT-13	MB620252	MTIP-5004	MB526147	MTID-5003	MB526146
V34V	4D56	MT/AT	2500	199101	199307	MT-13	MB620252	MTIP-5004	MB526147	MTID-5003	MB526146
V44V	4D56	5MT	2500	199101	199307	MT-13	MB620252	MTIP-5004	MB526147	MTID-5003	MB526146
V44V	4D56	5MT	2500	199101	199307	MT-13	MB620252	MTIP-5004	MB526147	MTID-5003	MB526146
V44V	4D56	MT/AT	2500	199101	199307	MT-13	MB620252	MTIP-5004	MB526147	MTID-5003	MB526146
V14V	4D56	5MT	2500	199101	199306	MT-13	MB620252	MTIP-5004	MB526147	MTID-5003	MB526146
V14V	4D56	5MT	2500	199101	199306	MT-13	MB620252	MTIP-5004	MB526147	MTID-5003	MB526146
V14V	4D56	5MT	2500	199101	199306	MT-13	MB620252	MTIP-5004	MB526147	MTID-5003	MB526146
V14V	4D56	5MT	2500	199101	199306	MT-13	MB620252	MTIP-5004	MB526147	MTID-5003	MB526146
V24WV	4D56	5MT	2500	199101	199407	MT-13	MB620252	MTIP-5004	MB526147	MTID-5003	MB526146
V24WV	4D56	5MT	2500	199101	199407	MT-13	MB620252	MTIP-5004	MB526147	MTID-5003	MB526146
V24WV	4D56	MT/AT	2500	199101	199407	MT-13	MB620252	MTIP-5004	MB526147	MTID-5003	MB526146
V24WV	4D56	MT/AT	2500	199105	199603	MT-13	MB620252	MTIP-5004	MB526147	MTID-5003	MB526146
V34V	4D56	MT/AT	2500	199105	199307	MT-13	MB620252	MTIP-5004	MB526147	MTID-5003	MB526146
V44V	4D56	MT/AT	2500	199105	199307	MT-13	MB620252	MTIP-5004	MB526147	MTID-5003	MB526146
V26	4M40	5MT	2800	199307		MT-14	MB620256	MTIP-5005	MR350587	MTID-5002	MR350586
V26WG	4M40	AT	2800	199307	199603	MT-13	MB620834	MTIP-5005	MR350587	MTID-5002	MR350586
V26WG	4M40	MT	2800	199307	199603	MT-14	MB620256	MTIP-5005	MR350587	MTID-5002	MR350586
V46WV	4M40	AT	2800	199307	199603	MT-13	MB620834	MTIP-5005	MR350587	MTID-5002	MR350586
V46WV	4M40	MT	2800	199307	199603	MT-14	MB620256	MTIP-5005	MR350587	MTID-5002	MR350586
L041	G63B	MT/AT	3000	198201	198601	MT-14	MB160654				
L141/6	6G72	MT/AT	3000	198801	198901	MT-13	MB526271	MTIP-5004	MB526147	MTID-4001	MB526273
L146	6G72	MT/AT	3000	198901	199001	MT-14	MB620326	MTIP-5004	MB526147	MTID-4001	MB526273
V43W	6G72	AT	3000	199101	199603	MT-13	MB620252	MTIP-5004	MB526147	MTID-5003	MB526146
V43W	6G72	MT/AT	3000	199101	199603	MT-13	MB620834	MTIP-5004	MB526147	MTID-5003	MB526146
V43W	6G72	4AT	3000	199101		MT-13	MB620252	MTIP-5004	MB526147	MTID-5003	MB526146
V23WC	6G72	5MT	3000	199101		MT-13	MB620834	MTIP-5004	MB526147	MTID-5003	MB526146
V23WC	6G72	4AT	3000	199101		MT-13	MB620252	MTIP-5004	MB526147	MTID-5003	MB526146
V73W 4WD	6G72	AT/F	3000	199906	200207	MT-99A50	MR453384	MTIN-P01	MR528711	MTIN-D01	MR528710
V63W 4WD	6G72	AT/F	3000	200008	200207	MT-99A50	MR453384	MTIN-P01	MR528711	MTIN-D01	MR528710
V63W 4WD	6G72	AT/F	3000	200208		MT-99A50	MR580734	MTIN-P01	MR528711	MTIN-D01	MR528710
V73W 4WD	6G72	AT/F	3000	200208		MT-99A50	MR453384	MTIN-P01	MR528711	MTIN-D01	MR528710
V73W 4WD	6G72	AT/F	3000	200208		MT-99A50	MR580734	MTIN-P01	MR528711	MTIN-D01	MR528710
V68W 4WD	4M41	AT/F	3200	199906	200207	MT-99A50	MR453384	MTIN-P01	MR528711	MTIN-D01	MR528710
V78W 4WD	4M41	AT/F	3200	199906	200207	MT-99A50	MR453384	MTIN-P01	MR528711	MTIN-D01	MR528710
V68W/V78W	4M41	4/5MT	3200	199909		MT-99A50	MR453384	MTIN-P01	MR528711	MTIN-D01	MR528710
V68W 4WD	4M41	AT/F	3200	200208		MT-99A50	MR453384	MTIN-P01	MR528711	MTIN-D01	MR528710
V68W 4WD	4M41	AT/F	3200	200208		MT-99A50	MR580734	MTIN-P02	MR528714	MTIN-D01	MR528710
V78W 4WD	4M41	AT/F	3200	200208		MT-99A50	MR453384	MTIN-P01	MR528711	MTIN-D01	MR528710
V78W 4WD	4M41	AT/F	3200	200208		MT-99A50	MR580734	MTIN-P01	MR528711	MTIN-D01	MR528710
V25WC	6G74	MT/AT	3500	199307		MT-14	MB620256	MTIP-5005	MR350587	MTID-5002	MR350586
V45W	6G74	MT/AT	3500	199307	199603	MT-14	MB620256	MTIP-5005	MR350587	MTID-5002	MR350586
V65W 4WD	6G74	AT/F	3500	199906	200207	MT-99A50	MR453384	MTIN-P01	MR528711	MTIN-D01	MR528710
V75W 4WD	6G74	AT/F	3500	199906	200207	MT-99A50	MR453384	MTIN-P01	MR528711	MTIN-D01	MR528710
V65W/V75W	6G74	4/5MT	3500	199909		MT-99A50	MR453384	MTIN-P01	MR528711	MTIN-D01	MR528710
V65W 4WD	6G74	AT/F	3500	200208		MT-99A50	MR453384	MTIN-P01	MR528711	MTIN-D01	MR528710
V65W 4WD	6G74	AT/F	3500	200208		MT-99A50	MR580734	MTIN-P01	MR528711	MTIN-D01	MR528710
V75W 4WD	6G74	AT/F	3500	200208		MT-99A50	MR453384	MTIN-P01	MR528711	MTIN-D01	MR528710
V75W 4WD	6G74	AT/F	3500	200208		MT-99A50	MR580734	MTIN-P01	MR528711	MTIN-D01	MR528710
PROUDIA/DIGNITY											
S43A /S33A	8A80	5AT	4500	199912			MR453266				
PROUDIA											
S32A	6G74	5AT	3500	199912			MR453208				
RVR											
N11W	4G93	MT/AT	1800	199106	199207		MB837512				
N11W	4G93	MT/AT	1800	199207	199604		MB836526				
N21W 4WD	4G93	MT/AT	1800	199106	199207		MB837432				
N21W 4WD	4G93	MT/AT	1800	199207	199604		MB886242				
N21W 4WD	4G93	MT/AT	1800	199409	199604		MR195726				
N61W	4G93	4AT	1800	199711			MR290398				
N61W	4G93	4AT	1800	199711			MR389414				
N71W4WD	4G93	4AT	1800	199711			MR290404				
N71W4WD	4G93	4AT	1800	199711			MR331344				
N13W	4G63	MT/AT	2000	199101	199207	MT-09	MB837426	MTIU-5008	MB837166	MTIU-5008	MB837166
N13W	4G63	MT/AT	2000	199207	199302		MR232154	MTIU-5008	MB837166	MTIU-5008	MB837166
N13W	4G63	MT/AT	2000	199302	199604	MT-09	MB837184	MTIU-5008	MB837166	MTIU-5008	MB837166
N23W 4WD	4G63	MT/AT	2000	199101	199207	MT-09	MB837434	MTIU-5008	MB837166	MTIU-5008	MB837166

MITSUBISHI

MODEL	ENGINE	AT/MT	CC	YEAR	YEAR	OUTER	O.E No.R	INNER R	O.E No.IR	INNER L	O.E No.IL
N23W 4WD	4G63	MT/AT	2000	199207	199604	MT-09	MR110406	MTIU-5008	MB837166	MTIU-5008	MB837166
N23W 4WD	4G63	MT/AT	2000	199307	199604		MR232572	MTIU-5008	MB837166	MTIU-5008	MB837166
N23W 4WD	4G63	MT/AT	2000	199307	199604		MR176138	MTIU-5008	MB837166	MTIU-5008	MB837166
N28W/WG 4WD	4D68	MT/AT	2000	199209	199604		MR110212				
N28W/WG 4WD	4D68	MT/AT	2000	199209	199604		MR232572				
N73WG 4WD	4G63	5MT	2000	199711			MR410016				
N73WG 4WD	4G63	5MT	2000	199711			MR453612				
N73WG 4WD	4G63	4AT	2000	199711			MR377124				
N64WG	4G64	4AT	2400	199910			MR498150				
N74WG 4WD	4G64	4AT	2400	199711			MR290408				
N74WG 4WD	4G64	4AT	2400	199711			MR498156				
N74WG 4WD	4G64	4AT	2400	199711			MR336084				
SIGMA											
F11A	6G71	MT/AT	2000	199005	199109	MT-18	MB526522	MTIU-5023	MB837318		
F11A	6G71	MT/AT	2000	199110	199209	MT-18	MB886252	MTIU-5023	MB837318		
F12A	6A12	MT/AT	2000	199210		MT-18	MB936700	MTIU-5023	MB837318		
F13A	6G73	AT	2500	199009	199109	MT-16	MB620752				
F13A	6G73	AT	2500	199110	199310	MT-18	MB886256				
F13A	6G73	MT	2500	199110	199310	MT-03A43	MB886254				
F13A	6G73	MT/AT	2500	199308		MT-22	MB886260				
F15A 4WS	6G73	AT	2500	199002	199109	MT-22	MB620754				
F15A 4WS	6G73	AT	2500	199110	199309	MT-22	MB886260				
F25A 4WD	6G73	AT	2500	199009	199109	MT-23	MB620702				
F25A 4WD	6G73	AT	2500	199110		MT-23	MB886266				
F13A	6G73	MT/AT	2500	199001	199109	MT-18	MB620482				
F17A 4WS	6G72	AT	3000	199009	199109	MT-16	MB620758				
F17A 4WS	6G72	AT	3000	199110		MT-16	MR110886				
F27A 4WD	6G72	AT	3000	199009	199109	MT-23	MB620702				
F27A 4WD	6G72	AT	3000	199110	199309	MT-23	MB886266				
STRADA											
K74	4D56	MT/AT	2500	199706			MR276874				
TOPPO BJ WIDE											
H43A	4A31	4AT	1100	199901			MR486338				
H43A	4A31	4AT	1100	199901			MR486336				
H48A 4WD	4A31	4AT	1100	199901			MR486338				
H48A 4WD	4A31	4AT	1100	199901			MR486336				
TOPPO BJ											
H41A	4A30	MT/AT	660	199810			MR486288				
H41A	4A30	MT/AT	660	199810			MR486286				
H42A	3G83	MT/AT	660	199810			MR486278				
H42A	3G83	MT/AT	660	199810			MR486276				
H46A 4WD	4A30	MT/AT	660	199810			MR486288				
H46A	4A30	MT/AT	660	199810			MR486286				
H47A 4WD	3G83	MT/AT	660	199810			MR486278				
H47A 4WD	3G83	MT/AT	660	199810			MR486276				
TOWN BOX											
U 62 W 4 WD	3G83	5MT	660	199901			MR498091				
U 62 W 4 WD	3G83	5MT	660	199901			MR498089				
U 62 W 4 WD	3G83	4AT	660	199901			MR498095				
U 62 W 4 WD	3G83	4AT	660	199901			MR498093				
U64W4WD	4A30 TBO	5MT	660	199901			MR498091				
U64W4WD	4A30 TBO	5MT	660	199901			MR498095				
U63W	4A30 TBO	4AT	660	199901			MR498093				
U64W4WD	4A30 TBO	4AT	660	199901			MR498095				
TREDIA											
A211	G12B	MT/AT	1400	198201	198401	MT-04	MB176865				
A212	G32B	AT	1600	198201	198401	MT-04	MB176865				
A212	G32B TBO	MT/AT	1600	198201	198401	MT-05	MB176872				
A212	G32B	MT/AT	1600	198401	198801	MT-04	MB297662				
A212	G32B	MT/AT	1600	198401	198801	MT-04	MB297662				
A213	G37B	MT/AT	1800	198401	198701	MT-04	MB176867				
A215	G62B	AT	1800	198201	198401	MT-04	MB297662				
A213	G62B TBO	MT/AT	1800	198301	198401	MT-05	MB297385				
A213	G62B	MT/AT	1800	198401	198501	MT-06	MB297678				
A215	G37B	MT	1800	198401	198701	MT-04	MB297999				

NISSAN

MODEL	ENGINE	AT/MT	CC	YEAR	YEAR	OUTER	O.E No.R	INNER R	O.E No.IR	INNER L	O.E No.IL
AD VAN/WINGROAD											
VY11	QG13DE	5MT	1300	199906		NS-60A42	39100-4M470				
VY11	QG13DE	5MT	1300	199906		NS-60	39100-4M400				
VY11	QG13DE	5MT	1300	199906		NS-60	39100-4M460				
VY11	QG13DE	4AT	1300	199906		NS-60	39100-4M465				
VFY11 ,WFY11	QG15DE	5MT	1500	199906			39100-4M771				
VFY ,WFY11	QG15DE	5MT	1500	199906			39100-4M700				
VFY ,WFY11	QG15DE	5MT	1500	199906			39100-4M761				
VFY11 ,WFY11	QG15DE	4AT	1500	199906		NS-60A42	39100-4M475				
VFY11 ,WFY11	QG15DE	4AT	1500	199906			39100-4M776				
VFY11 ,WFY11	QG15DE	4AT	1500	199906		NS-60	39100-4M465				
VFY11 ,WFY11	QG15DE	4AT	1500	199906			39100-4M766				
V/WHNY11 4WD	QG18DE	MT/AT	1800	199906		NS-61A42	39100-4M570	NSIU-Y11	39711-64E00		
WHY11	QG18DE	4AT	1800	199906		NS-61A42	39100-4M570				
V/WHNY11 4WD	QG18DE	5MT	1800	199906		NS-61	39100-4M500	NSIU-Y11	39711-64E00		
V/WHNY11 4WD	QG18DE	5MT	1800	199906		NS-61	39100-4M500	NSIU-Y11	39711-64E00		
V/WHNY11 4WD	QG18DE	4AT	1800	199906		NS-61	39100-4M500				
Y12 4WD	HR15DE	AT	1500	200511			39211-EN100	NSIU-XTR	39711-2U600	NSIU-XTR	39711-2U600
AD VAN/AD MAX WAGON											
VHB11	E15S	MT/AT	1500	198210	199009	NS-04	39100-13A00				
V/WFY10/FGY10	GA15DS	AT	1500	199010	199608	NS-13	39100-51Y00				
V/WFY10/FGY10	GA15DS	MT	1500	199010	199608	NS-13	39100-64R00				
VFN/WFNY10 4WD	GA15DS E	MT	1500	199010	199608	NS-13	39100-64R00	NSIU-Y11	39711-64E00		
V/WFY10/FGY10	GA15DS	AT	1500	199010	199506	NS-13A42	39100-51Y10				
V/WFY10/FGY10	GA15DS	MT	1500	199010	199605	NS-13	39100-50Y00				
V/WFY10/FGY10	GA15DS	MT	1500	199010	199605	NS-13A42	39100-50Y10				
VFN/WFNY10 4WD	GA15DS E	AT	1500	199010	199605	NS-17	39100-62Y05	NSIU-Y11	39711-64E00		
VFN/WFNY10 4WD	GA15DS E	AT	1500	199010	199605	NS-17A42	39100-62Y15	NSIU-Y11	39711-64E00		
VFN/WFNY10 4WD	GA15DS E	MT	1500	199010	199605	NS-17	39100-62Y05	NSIU-Y11	39711-64E00		
VFN/WFNY10 4WD	GA15DS E	MT	1500	199010	199605	NS-17A42	39100-62Y15	NSIU-Y11	39711-64E00		
VFN/WFNY10 4WD	GA15DS E	MT	1500	199010	199608	NS-17	39100-62Y00	NSIU-Y11	39711-64E00		
V/WFY10/FGY10	GA15DS	MT	1500	199204	199408	NS-13	39100-50Y00				
VHB11	E15S	MT/AT	1500	199210	199009	NS-04	39100-11M05				
V/WFY10/FGY10	GA15DS	AT	1500	199506	199906	NS-17	39100-60Y05				
V/WFY10/FGY10	GA15DS	HMM	1500	199506	199906	NS-17A42	39100-60Y15				
VSB11	CD17	MT/AT	1700	198210	199009	NS-04	39100-13A10				
VSB11	CD17	AT	1700	198805	199009	NS-04	39100-47A00				
V/WSY10.VSGY10	CD17	AT	1700	199010	199608	NS-13A42	39100-53Y00				
V/WSY10.VSGY10	CD17	MT	1700	199010	199608	NS-13A42	39100-52Y00				
VSNY10 4WD	CD17	AT	1700	199010	199608	NS-13A42	39100-53Y00	NSIU-Y11	39711-64E00		
VSNY10 4WD	CD17	MT	1700	199010	199608	NS-13A42	39100-52Y00	NSIU-Y11	39711-64E00		
VSNY10 4WD	CD17	MT/AT	1700	199010	199308	NS-17	39100-62Y00	NSIU-Y11	39711-64E00		
AD VAN/AD WAGON											
VB11	E13S	MT/AT	1300	198210	199009	NS-49	39100-01M15				
VY10.WY10	GA13DS	MT/AT	1300	199010	199608	NS-13	39100-50Y00				
VB11	E13S	MT/AT	1300	199210	199009	NS-49	39100-03A00				
WEY10	CD20	5MT	2000	199308	199605		39100-79R00				
WEY10	CD20	5MT	2000	199308	199605	NS-13	39100-79R10				
WEY10	CD20	4AT	2000	199308	199605	NS-13A42	39100-53Y00				
WEY10	CD20	4AT	2000	199308	199605	NS-13A42	39100-53Y10				
VEY11	YD22DD	5MT	2200	199906		NS-62A42	39100-WD210				
VEY11	YD22DD	5MT	2200	199906		NS-62	39100-WD200				
VEY11	YD22DD	4AT	2200	199906		NS-62A42	39100-WD215				
VEY11	YD22DD	4AT	2200	199906		NS-62	39100-WD205				
VENY11 4WD	YD22DD	5MT	2200	199906			39100-WD315				
ALMERA UKP											
N16	K9K	5MT	1500	200001	200612	NS-QG18A42	39211-BM726				
N16	QG15DE	5MT	1500	200001	200612	NS-N16A42	39100-BM510	NSIU-N16	39100-BM510	NSIU-N16	39101-BM510
N16	QG15DE	5MT	1500	200001	200612	NS-N16A42	39100-BM500	NSIU-N16	39100-BM510	NSIU-N16	39101-BM510
N16	QG15DE	5MT	1500	200001	200612	NS-N16A42	39100-BM520	NSIU-N16	39100-BM510	NSIU-N16	39101-BM510
N16	QG15DE	5MT	1500	200002	200304	NS-N16	39211-BM525	NSIU-N16	39100-BM500	NSIU-N16	39101-BM510
N16E	QG15DE	AT/MT	1500	200304			39101-BM560	NSIU-N16B	39204-BM527	NSIU-N16B	39205-BM525
N16	QG18DE	5MT	1800	200001	200612	NS-QG18A42	39211-BM726	NSIP-TN	39711-6J000	NSID-TN	39711-64J01
N16	QG18DE	4AT	1800	200001	200612	NS-QG18A42	39211-BM726	NSIP-TN	39711-6J000	NSID-TN	39711-64J01
N16E	QG18DE	4AT	1800	200302		NS-N16BA44	39211-BN815		39204-4M772		39205-4M772
AUSTER STANZA											
T12	CA16S	MT/AT	1600	198510	198801	NS-08	39100-02E02				
T12	CA16S	MT/AT	1600	198801	198912		39100-D4400				
PT12	CA18I	MT/AT	1800	198501	198801	NS-15	39100-16E02				
PT12	CA18I	MT	1800	198510	198801	NS-08	39100-02E02				
PT12	CA18ET	MT/AT	1800	198510	198801	NS-15	39100-10E02				
PT12	CA18DT	MT/AT	1800	198510	198801	NS-15	39100-16E02				
PT12	CA18I	AT	1800	198510	198801	NS-15	39100-10E02				
PT12	CA18I	AT	1800	198801	199006	NS-19	39100-D4000				
PT12	CA18I	MT	1800	198801	198912		39100-D3600				
PT12	CA18DT	MT/AT	1800	198801	198912	NS-16	39100-D5600				
PT12	CA18DE	MT/AT	1800	198801	199006	NS-16	39100-D5600				
PT12	CA18DE	MT/AT	1800	198801	199006	NS-16	39100-D5610				
AVENIR											
VEW10	GA16DS	AT	1600	199005	199301	NS-19	39100-71N05				
VEW10	GA16DS	AT	1600	199005	199301	NS-19A42	39100-71N15				
VEW10	GA16DS	MT	1600	199005	199301	NS-19	39100-70N00				
VEW10	GA16DS	MT	1600	199005	199301	NS-19A42	39100-70N10				
VENW10 4WD	GA16DS	MT	1600	199010	199301	NS-19	39100-74N00				
W10	SR18DI E	MT/AT	1800	199005	199301	NS-19	39100-80E00				
W10	SR18DI E	MT/AT	1800	199005	199301	NS-AV-A44	39100-80E15				
W11	QG18DE	5MT	1800	199808		NS-TN-A44	39100-WA112	NSIP-TN	39711-6J002	NSID-TN	39711-64J03
W11	QG18DE	4AT	1800	199808		NS-TN-A44	39100-WA012	NSIP-TN	39711-6J000	NSID-TN	39711-64J01
VSW10	CD20	MT	2000	199001	199301	NS-19	39100-71N00				
PW10	SR20DE	MT/AT	2000	199005	199301	NS-16	39100-73N00				

NISSAN

MODEL	ENGINE	AT/MT	CC	YEAR	YEAR	OUTER	O.E No.R	INNER R	O.E No.IR	INNER L	O.E No.IL
PW10	SR20DE	AT	2000	199005	199301	NS-AV-A44	39100-73N10				
PW10	SR20DE	MT	2000	199005	199301	NS-16	39100-73N00				
PW10	SR20DE	MT	2000	199005	199301	NS-AV-A44	39100-73N10				
VSW10	CD20	AT	2000	199005	199301	NS-19	39100-71N05				
VSW10	CD20	AT	2000	199005	199301	NS-19A42	39100-71N15				
VSW10	CD20	MT	2000	199005	199301	NS-19	39100-71N04				
VSW10	CD20	MT	2000	199005	199301	NS-AV-A44	39100-71N14				
PNW10 4WD	SR20DE	AT	2000	199010	199508	NS-19	39100-64E05				
PNW10 4WD	SR20DE	AT	2000	199010	199508	NS-34	39100-64E15				
SW10	CD20T	AT	2000	199301	199508	NS-16	39100-73N00				
SW10	CD20T	AT	2000	199301	199508	NS-AV-A44	39100-73N10				
PNW10 4WD	SR20DE	AT	2000	199508	199808	NS-AV-A44	39100-0 E600				
PNW10 4WD	SR20DE	AT	2000	199508	199808	NS-AV-A44	39100-0 E610				
SW11	CD20ET	4AT	2000	199808	200005	NS-W11A44	39100-WA010			NSIL-W11	39711-0E505
SW11	CD20ET	4AT	2000	199808	200005	NS-W11A44	39100-WA015			NSIL-W11	39711-0E505
PW11	SR20DE	CVT	2000	199808		NS-W11A44	39100-WA010			NSIL-W11	39711-0E505
PW11	SR20DE	CVT	2000	199808		NS-W11A44	39100-WA015			NSIL-W11	39711-0E505
PNW11 4WD	SR20DE	4AT	2000	199808		NS-W11A44	39100-WA210			NSIU-Y11	39711-64E00
PNW11 4WD	SR20DET	4AT	2000	199808		NS-W11A44	39100-WA210			NSIU-Y11	39711-64E00
SW11	CD20ET	4AT	2000	199808	200005	NS-W11A44	39100-WA015			NSIL-W11	39711-0E505
BASSARA											
JU30	KA24DE	4AT	2400	199911			39100-5V010				
JU30	KA24DE	4AT	2400	199911			39100-5V010				
JNU30 4WD	KA24DE	4AT	2400	199911			39100-AD315				
JVU30	YD25DDTI	4AT	2500	199911			39100-5V010				
VU30	YD25DDTI	4AT	2500	199911			39100-5V010				
JVU30	YD25DDTI	4AT	2500	199911			39100-AD315				
JHU30	VQ30DE	4AT	3000	199911			39100-AD115				
JHU30	VQ30DE	4AT	3000	199911			39100-AD115				
BE-1											
BK10	MA10S	AT	1000	198701	198805	NS-10	39100-01B15				
BK10	MA10S	MT	1000	198701	198805	NS-10	39100-01B60				
BLUEBIRD SYLPHY											
FG10	QG15DE	5MT	1500	200008		NS-60A42	39100-4M470				
G10	QG15DE	4AT/F	1500	200008		NS-60A42	39100-4M475				
G10	QG15DE	5MT/F	1500	200008		NS-60A42	39100-4M470				
QG10	QG18DE	4AT	1800	200008			39100-4M776				
QNG10 4WD	QG18DE	4AT	1800	200008		NS-61A42	39100-4M570			NSIU-Y11	39711-64E00
G10	QG18DE	4AT/F	1800	200008		NS-17A42	39100-4M776				
G10 4WD	QG18DE	4AT/F	1800	200008		NS-61A42	39100-4M570			NSIU-Y11	39711-64E00
TG10	QR20DD	CVT	2000	200008			39100-6N215				
G10	QR20DD	CVT/F	2000	200008		NS-17A42	39100-6N215				
G11 4WD	HR15DE	AT/MT	1500	200512			39211-EN100	NSIU-XTR	39711-2U600	NSIU-XTR	39711-2U600
BLUEBIRD VAN/BLUEBIRD WAGON											
VRU11	CA16S	MT/AT	1600	198310	198508	NS-08	39100-01E02				
VRU11	CA16S	MT/AT	1600	198508	198709	NS-08	39100-02E02				
VRU11	CA16S	MT/AT	1600	198709	199005		39100-D4400				
WU11	CA18S	3AT	1800	198310	198508	NS-08	39100-01E02				
WU11	CA18S	MT	1800	198310	198709	NS-08	39100-02E02				
WU11	CA18ET	MT/AT	1800	198310	198709	NS-15	39100-10E02				
WU11	CA18S	4AT	1800	198508	198709	NS-15	39100-10E02				
WU11	CA18S	4AT	1800	198709	199005	NS-19	39100-D4000				
WU11	CA18S	MT	1800	198710	199005		39100-D3600				
WU11	CA18ET	MT/AT	1800	198710	199005	NS-16	39100-D5610				
VEU11	LD20	MT	2000	198310	198709	NS-15	39100-05E02				
VEU11	LD20	MT	2000	198709	199005	NS-19	39100-D4600				
BLUEBIRD											
RU11	CA16S	MT/AT	1600	198301	198701	NS-08	39100-01E02				
RU11	CA16S	MT/AT	1600	198310	198709	NS-08	39100-02E02				
U12	CA16S	MT/AT	1600	198709	199109		39100-51E00				
U13	CA16DS	AT	1600	199109	199511	NS-29	39100-0E705				
U13	CA16DS	AT	1600	199109	199511	NS-29	39100-0E715				
U13	CA16DS	MT	1600	199109	199511	NS-29	39100-0E700				
U13	CA16DS	MT	1600	199109	199511	NS-29	39100-0E710				
U11	CA18I	MT/AT	1800	198301	198701	NS-15	39100-05E02				
U11	CA18I	MT/AT	1800	198301	198701	NS-15	39100-10E02				
U11	CA18	3AT	1800	198310	198508	NS-08	39100-01E02				
U11	CA18	MT	1800	198310	198709	NS-08	39100-02E02				
U11	CA18ET	MT/AT	1800	198310	198709	NS-15	39100-10E02				
U11	CA18S	AT	1800	198501	198801	NS-15	39100-10E02				
U11	CA18S	AT	1800	198501	198801	NS-15	39100-16E00				
U11	CA18S	MT	1800	198501	198801	NS-08	39100-01E02				
U11	CA18S	MT	1800	198501	198801	NS-08	39100-02E02				
U11	CA18	4AT	1800	198508	198709	NS-15	39100-10E02				
U11	CA18DET	MT/AT	1800	198508	198709	NS-15	39100-16E02				
U11	CA18S	AT	1800	198701		NS-19	39100-D4000				
RU12	CA18I	MT/AT	1800	198709	198910	NS-19	39100-62E00				
RU12	CA18I	MT/AT	1800	198709	198910	NS-19	39100-61E00				
RU12	CA18DE	MT/AT	1800	198709	198910	NS-16	39100-55E01				
RU12	CA18DE	MT/AT	1800	198709	198910	NS-AV-A44	39100-55E11				
RNU12 4WD	CA18	MT/AT	1800	198709	198910	NS-19	39100-64E00	NSIU-Y11	39711-64E00		
RU12	CA18	MT/AT	1800	198709	198910	NS-19A42	39100-64E10				
RNU12 4WD	CA18	MT/AT	1800	198709	198910	NS-19A42	39100-64E10	NSIU-Y11	39711-64E00		
EU12	SR18DI	MT/AT	1800	198901	199109	NS-19	39100-80E05				
EU12	SR18DI	AT	1800	198910	199109	NS-19	39100-80E05				
EU12	SR18DI	MT	1800	198910	199109	NS-19	39100-80E05				
EU12	SR18DI	MT/AT	1800	198910	199109		39100-80E15				
ENU12 4WD	SR18DI	MT/AT	1800	198910	199109	NS-19	39100-64E05	NSIU-Y11	39711-64E00		
ENU12 4WD	SR18DI	MT/AT	1800	198910	199109	NS-34	39100-64E15	NSIU-Y11	39711-64E00		
EU13	SR18DE	MT/AT	1800	199101	199601	NS-30	39100-0E500				

NISSAN

MODEL	ENGINE	AT/MT	CC	YEAR	YEAR	OUTER	O.E No.R	INNER R	O.E No.IR	INNER L	O.E No.IL
EU13	SR18DE	AT	1800	199101	199601	NS-29	39100-0E405				
EU13	SR18DE	MT	1800	199101	199601	NS-35	39100-0E510				
EU13	SR18DE	AT	1800	199101	199601	NS-34	39100-0E415				
EU13	SR18DE	AT	1800	199101	199601	NS-34	39100-0E415				
ENU13 4WD	SR18DE	AT	1800	199109	199511		39100-0 E600			NSIU-Y11	39711-64E00
ENU13 4WD	SR18DE	AT	1800	199109	199511		39100-0 E610			NSIU-Y11	39711-64E00
ENU13 4WD	SR18DE	MT	1800	199109	199511		39100-0 E600			NSIU-Y11	39711-64E00
ENU13 4WD	SR18DE	MT	1800	199109	199511		39100-0 E610			NSIU-Y11	39711-64E00
EU14	SR18DE	MT/AT	1800	199601		NS-29	39100-3J100				
EU14	SR18DE	MT/AT	1800	199601		NS-34	39100-3J110				
ENU14 4WD	SR18DE	AT	1800	199601		NS-19	39100-65J00	NSIU-Y11	39711-64E00		
ENU14 4WD	SR18DE	AT	1800	199601		NS-19A42	39100-65J10	NSIU-Y11	39711-64E00		
ENU14 4WD	SR18DE	MT	1800	199601			39100-3J200	NSIU-Y11	39711-64E00		
ENU14 4WD	SR18DE	MT	1800	199601		NS-19A42	39100-3J210	NSIU-Y11	39711-64E00		
EU14	SR18DE	MT/AT	1800	199601		NS-34A44	39100-3J110				
PU11	CA20S	AT	2000	198310	198508	NS-15	39100-10E02				
PU11	CA20S	MT	2000	198310	198508	NS-08	39100-04E02				
EU11	LD20	MT/AT	2000	198310	198709	NS-15	39100-05E02				
PU11	VG20E	MT/AT	2000	198410	198810	NS-15	39100-10E02				
PU11	VG20ET	MT/AT	2000	198410	198601	NS-15	39100-16E00				
PU11	VG20ET	MT/AT	2000	198601	198810	NS-15	39100-26E10				
EU11	LD20	MT	2000	198701		NS-19	39100-D4600				
SU12	LD20	MT/AT	2000	198709	199109	NS-19	39100-63E00				
HU12	SR20DE	MT/AT	2000	198910	199109	NS-16	39100-55E01				
HU12	SR20DE	MT/AT	2000	198910	199109	NS-AV-A44	39100-55E11				
HNU12 4WD	SR20DET	MT/AT	2000	198910	199109	NS-19	39100-64E05	NSIU-Y11	39711-64E00		
HNU12 4WD	SR20DET	MT/AT	2000	198910	199109	NS-34	39100-64E15	NSIU-Y11	39711-64E00		
HU13	SR20DE	AT	2000	199109	199511	NS-30	39100-0E505				
HU13	SR20DE	AT	2000	199109	199511	NS-35	39100-0E515				
HU13	SR20DE	MT	2000	199109	199511	NS-30	39100-0E500				
HU13	SR20DE	MT	2000	199109	199511	NS-35	39100-0E510			NSIU-Y11	39711-64E00
HNU13 4WD	SR20DE	AT	2000	199109	199511		39100-0 E600			NSIU-Y11	39711-64E00
HNU13 4WD	SR20DE	AT	2000	199109	199511		39100-0 E610			NSIU-Y11	39711-64E00
HNU13 4WD	SR20DE	MT	2000	199109	199511		39100-0 E600			NSIU-Y11	39711-64E00
HNU13 4WD	SR20DE	MT	2000	199109	199511		39100-0 E610			NSIU-Y11	39711-64E00
HNU13 4WD	SR20DET	AT	2000	199109	199511		39100-1 E000			NSIU-Y11	39711-64E00
HNU13 4WD	SR20DET	AT	2000	199109	199511		39100-1 E010			NSIU-Y11	39711-64E00
HNU13 4WD	SR20DET	MT	2000	199109	199511		39100-1 E000			NSIU-Y11	39711-64E00
HNU13 4WD	SR20DET	MT	2000	199109	199511		39100-1 E010			NSIU-Y11	39711-64E00
SU13	CD20	AT	2000	199109	199511	NS-29	39100-0E405				
SU13	CD20	AT	2000	199109	199511	NS-34	39100-0E415				
SU13	CD20	MT	2000	199109	199511	NS-29	39100-0E400				
SU13	CD20	MT	2000	199109	199511	NS-34	39100-0E410				
SNU13 4WD	CD20	AT	2000	199109	199511		39100-0 E602			NSIU-Y11	39711-64E00
SNU13 4WD	CD20	AT	2000	199109	199511		39100-0 E612			NSIU-Y11	39711-64E00
SNU13 4WD	CD20	MT	2000	199109	199511		39100-0 E602			NSIU-Y11	39711-64E00
SNU13 4WD	CD20	MT	2000	199109	199511		39100-0 E612			NSIU-Y11	39711-64E00
HU14	SR20DE	AT	2000	199601		NS-29	39100-2 J205				
HU14	SR20DE	AT	2000	199601		NS-65A44	39100-2J215				
HU14	SR20DE	MT	2000	199601		NS-45	39100-2J200				
HU14	SR20DE	MT	2000	199601		NS-65A44	39100-2 J210				
HNU14 4WD	SR20DE	AT	2000	199601		NS-19	39100-65J00	NSIU-Y11	39711-64E00		
HNU14 4WD	SR20DE	AT	2000	199601		NS-19A42	39100-65J10	NSIU-Y11	39711-64E00		
HNU14 4WD	SR20DE	MT	2000	199601			39100-3J200	NSIU-Y11	39711-64E00		
HNU14 4WD	SR20DE	MT	2000	199601		NS-19A42	39100-3J210	NSIU-Y11	39711-64E00		
U14	CD20	AT	2000	199601	200108	NS-29	39100-3J100				
U14	CD20	AT	2000	199601	200108	NS-34	39100-3J110				
U14	CD20	MT	2000	199601	200108		39100-8E100				
U14	CD20	MT	2000	199601	200108		39100-8E110				
PU13	KA24DE	AT	2400	199308	199511	NS-36	39100-2B015				
CALIFORNIA											
B11	E15	MT/AT	1500	198110	198509	NS-04	39100-13A00				
B11	E15	MT/AT	1500	198110	198509	NS-04	39100-11M05				
B12	E15S	MT/AT	1500	198509	198709	NS-07	39100-50A00				
B12 4WD	E15S	MT/AT	1500	198609	198709	NS-11	39100-51M00				
B12 4WD	E15S	MT/AT	1500	198609	198709	NS-11	39100-70A00				
B12	GA15S	MT/AT	1500	198709	199001	NS-07	39100-50A00				
B12	GA15S	4AT	1500	198709	198905	NS-07	39100-52A00				
B12 4WD	GA15	MT/AT	1500	198709	199009	NS-19	39100-70A10				
B12 4WD	GA15	MT/AT	1500	198709	199009	NS-19	39100-70A20				
B12	GA15S	4AT	1500	198905	199001	NS-07	39100-77A00				
Y10	GA15D	AT	1500	199010	199506	NS-13A42	39100-51Y10				
Y10	GA15D	MT	1500	199010	199605	NS-13	39100-50Y00				
Y10	GA15D	MT	1500	199010	199605	NS-13A42	39100-50Y10				
Y10 4WD	GA15	AT	1500	199010	199605	NS-17	39100-62Y05				
Y10 4WD	GA15	AT	1500	199010	199605	NS-17A42	39100-62Y15				
Y10 4WD	GA15	MT	1500	199010	199605	NS-17A42	39100-62Y15				
Y10	GA15D	AT	1500	199010	199608	NS-13	39100-51Y00				
Y10	GA15D	MT	1500	199010	199608	NS-13	39100-64R00				
Y10	GA15D	AT	1500	199506	199605	NS-17	39100-60Y05				
Y10	GA15D	AT	1500	199506	199605	NS-17A42	39100-60Y15				
WSB11	CD17	MT	1700	198210	198509	NS-04	39100-13A10				
WSB12	CD17	AT	1700	198509	199009		39100-50A20				
WSB12	CD17	MT	1700	198509	199009	NS-07	39100-50A11				
CARAVAN ELGRAND											
E50 4WD	QD32ETI	4AT	3200	199705	199908	NS-201	39100-58G00				
E50 4WD	VG33E	4AT	3300	199705	200008	NS-201	39100-58G00				
CARAVAN/HOMY											
E24 4WD	TD27	MT/AT	2700	198710	199305	NS-25	39100-20N00				
E24 4WD	TD27	MT/AT	2700	198710	199305	NS-25	39211-78G00				

NISSAN

MODEL	ENGINE	AT/MT	CC	YEAR	YEAR	OUTER	O.E No.R	INNER R	O.E No.IR	INNER L	O.E No.IL
E24 4WD	TD27T	MT/AT	2700	198810	199305	NS-25	39100-20N00				
E24 4WD	TD27T	AT	2700	198810	199305	NS-25	39211-78G00				
E24 4WD	TD27T	MT/AT	2700	198810	199305	NS-25	39100-20N00				
E24 4WD	TD27T	AT	2700	198810	199305	NS-25	39211-78G00				
E24 4WD	TD27	MT/AT	2700	199305	200104	NS-25	39100-20N00				
E24 4WD	TD27TI	4AT	2700	199305	199508	NS-25	39100-20N00				
E24 4WD	TD27ETI	4AT	2700	199508	199705	NS-25	39100-20N00				
E24 4WD	QD32	MT/AT	3200	199609	200104	NS-25	39100-20N00				
CEFIRO/MAXIMA											
A31	RB20DET	4AT	2000	9008	9408	NS-51A46	39100-23U00				
A31	RB20DET	4AT	2000	9008	9408	NS-51A46	39100-23U60				
A32	VQ20DE	4AT	2000	199408	199812	NS-27	39100-32U05	NSIP-5009	39771-2Y007	NSID-5001	39711-87E00
A32	VQ20DE	4AT	2000	199408	199812	NS-40A46	39100-32U15	NSIP-5009	39771-2Y007	NSID-5001	39711-87E00
A32	VQ20DE	5MT	2000	199408	199812	NS-27	39100-31U00	NSIP-5009	39771-2Y007	NSIL-A32	39711-86E00
A32	VQ20DE	5MT	2000	199408	199812	NS-40A46	39100-31U10	NSIP-5009	39771-2Y007	NSIL-A32	39711-86E00
A33	VQ20DE	5MT	2000	199812	200212	NS-40A46	39100-2Y115	NSIP-5009	39771-2Y007	NSIL-A32	39711-86E00
A33	VQ20DE	5MT	2000	199812	200212	NS-72A44	39100-2Y076			NSIL-A32	39711-86E00
A33	VQ20DE	5MT	2000	199812	200212	NS-72A44	39211-2Y210			NSIL-A32	39711-86E00
A33	VQ20DE	5MT	2000	199812	200212	NS-69A44	39100-2Y175			NSIL-A32	39711-86E00
A33	VQ20DE	5MT	2000	199812	200212	NS-69A44	39211-2Y070			NSIL-A32	39711-86E00
A33	VQ20DE	4AT	2000	199812	200101	NS-69A44	39100-2Y175				
A33	VQ20DE	4AT	2000	199812	200101	NS-69A44	39211-2Y070				
A33	VQ20DE	4AT	2000	199812	200101	NS-69A44	39100-2Y175				
A33	VQ20DE	4AT	2000	199812	200101	NS-69A44	39211-2Y070				
A33	VQ20DE	4AT	2000	200102	200212	NS-72A44	39100-2Y210				
A33	VQ20DE	4AT	2000	200102	200212	NS-72A44	39211-2Y210				
PA32	VQ25DE	4AT	2500	199408	199812	NS-27	39100-32U05	NSIP-5009	39771-2Y007	NSID-5001	39711-87E00
PA32	VQ25DE	4AT	2500	199408	199812	NS-40A46	39100-32U15	NSIP-5009	39771-2Y007	NSID-5001	39711-87E00
PA33	VQ25DD	4AT	2500	199812	200101	NS-40A46	39100-2Y115	NSIP-5009	39771-2Y007	NSID-5001	39711-87E00
PA33	VQ25DD	4AT	2500	199812	200101	NS-40A46	39100-2Y115	NSIP-5009	39771-2Y007	NSID-5001	39711-87E00
A33	VQ25DD	4AT	2500	199812	200212	NS-69A44	39100-2Y175				
A33	VQ25DD	4AT	2500	199812	200212	NS-69A44	39211-2Y070				
A33	VQ25DD	4AT	2500	199812	200212	NS-69A44	39100-2Y175				
A33	VQ25DD	4AT	2500	199812	200212	NS-69A44	39211-2Y070				
HA32	VQ30DE	4AT	3000	199408	200101	NS-27	39100-32U05	NSIP-5009	39771-2Y007	NSID-5001	39711-87E00
HA32	VQ30DE	4AT	3000	199408	200101	NS-40A46	39100-32U15	NSIP-5009	39771-2Y007	NSID-5001	39711-87E00
CEFIRO WAGON											
WA32	VQ20DE	4AT	2000	199706	199908	NS-40A46	39100-32U15	NSIP-5009	39771-2Y007	NSID-5001	39711-87E00
WA32	VQ20DE	4AT	2000	199706	199908	NS-40A46	39100-32U15	NSIP-5009	39771-2Y007	NSID-5001	39711-87E00
WA32	VQ20DE	4AT	2000	199706	199908	NS-40A46	39211-31U10	NSIP-5009	39771-2Y007	NSID-5001	39711-87E00
A33	VQ20DE	5MT	2000	199812		NS-27	39211-2Y010			NSIL-A32	39711-86E00
WA33	VQ20DE	5MT	2000	199812		NS-40A46	39100-2Y016			NSIL-A32	39711-86E00
WA33	VQ20DE	4AT	2000	199812		NS-40A46	39100-2Y115	NSIP-5009	39771-2Y007	NSID-5001	39711-87E00
WA33	VQ20DE	4AT	2000	199812		NS-40A46	39100-2Y115	NSIP-5009	39771-2Y007	NSID-5001	39711-87E00
WA32	VQ20DE	4AT	2000	199908		NS-27	39211-2Y010	NSIP-5009	39771-2Y007	NSID-5001	39711-87E00
WPA32	VQ25DE	4AT	2500	199706	199908	NS-40A46	39100-32U15	NSIP-5009	39771-2Y007	NSID-5001	39711-87E00
WPA32	VQ25DE	4AT	2500	199706	199908	NS-40A46	39100-32U15	NSIP-5009	39771-2Y007	NSID-5001	39711-87E00
WHA32	VQ30DE	4AT	3000	199706	199908	NS-40A46	39100-32U15	NSIP-5009	39771-2Y007	NSID-5001	39711-87E00
WHA32	VQ30DE	4AT	3000	199706	199908	NS-40A46	39100-32U15	NSIP-5009	39771-2Y007	NSID-5001	39711-87E00
CUBE											
Z10	CG13DE	4AT	1300	199802		NS-44	39100-2U310				
Z10	CG13DE	NCVT	1300	199802		NS-44A42	39100-72B10				
Z10	CG13DE	4AT	1300	199802	200210	NS-43A42	39211-2U060				
Z10	CG13DE	CVT	1300	199802	200210	NS-43A42	39211-2U000				
AZ10	CGA3DE	4AT	1300	199911	200009	NS-43A42	39211-2U000				
AZ10	CGA3DE	CVT	1300	199911	200009	NS-43A42	39211-2U060				
AZ10 4WD	CGA3DE	CVT	1300	199911			39100-AN310			NSIU-Y11	39711-64E00
AZ10 4WD	CGA3DE	CVT	1300	199802	200210		39211-2U610	NSIU-XTR	39711-2U600	NSIU-XTR	39711-2U600
Z11 4WD	CR14DE	AT	1400	200210	200505		39211-AX400	NSIU-XTR	39711-2U600	NSIU-XTR	39711-2U600
Z11 4WD	CR14DE	AT	1400	200505			39211-EN100	NSIU-XTR	39711-2U600	NSIU-XTR	39711-2U600
CUBE CUBIC											
Z11 4WD	HR15DE	AT	1500	200505			39211-EN100	NSIU-XTR	39711-2U600	NSIU-XTR	39711-2U600
DATSUN											
D21 4WD	Z20	MT/AT	2000	198501	198901	NS-24	39100-31G00				
D21 4WD	Z20	MT	2000	198708	198909	NS-25	39100-78G00				
D21 4WD	NA20S	MT	2000	198909	199310	NS-25	39100-78G00				
D21 4WD	NA20S	MT	2000	199310		NS-201	39100-58G00				
D21 4WD	TD23	MT	2300	198708	199208	NS-25	39100-78G00				
D22 4WD	KA24DE	MT/AT	2400	199906	200208	NS-71	39100-2S600	NSIU-TER	39711-35F10	NSIU-TER	39711-35F10
D22 4WD	KA24DE	MT/AT	2400	199906	200208	NS-71	39211-58G60	NSIU-TER	39711-35F10	NSIU-TER	39711-35F10
D22 4WD	KA24DE	MT/AT	2400	199906	200208	NS-71	39100-2S660	NSIU-TER	39711-35F10	NSIU-TER	39711-35F10
D22 4WD	KA24DE	4FAT	2400	199906	200208	NS-71	39100-2S600	NSIU-TER	39711-35F10	NSIU-TER	39711-35F10
D22 4WD	KA24DE	4FAT	2400	199906	200208	NS-71	39211-58G60	NSIU-TER	39711-35F10	NSIU-TER	39711-35F10
D22 4WD	KA24DE	4FAT	2400	199906	200208	NS-71	39100-2S660	NSIU-TER	39711-35F10	NSIU-TER	39711-35F10
D22 4WD	KA24E	5FMT	2400	199701	199906	NS-71	39100-2S600	NSIU-TER	39711-35F10	NSIU-TER	39711-35F10
D22 4WD	KA24E	5FMT	2400	199701	199906	NS-71	39211-58G60	NSIU-TER	39711-35F10	NSIU-TER	39711-35F10
D22 4WD	KA24E	5FMT	2400	199701	199906	NS-71	39100-2S660	NSIU-TER	39711-35F10	NSIU-TER	39711-35F10
D21 4WD	TD27	MT/AT	2700	198811	199310	NS-25	39100-78G00				
D21 4WD	TD27T	MT/AT	2700	199208	199701	NS-201	39100-58G00				
D21 4WD	TD27	MT/AT	2700	199310		NS-201	39100-58G00				
D22 4WD	QD32	5FMT	3200	199701	200208	NS-71	39100-2S600				
D22 4WD	QD32	5FMT	3200	199701	200208	NS-71	39211-58G60				
D22 4WD	QD32	5FMT	3200	199701	200208	NS-71	39100-2S660				
D22 4WD	QD32	MT/AT	3200	199701	200208	NS-71	39100-2S600				
D22 4WD	QD32	MT/AT	3200	199701	200208	NS-71	39211-58G60				
D22 4WD	QD32	MT/AT	3200	199701	200208	NS-71	39100-2S660				
D22 4WD	QD32	4FAT	3200	199702	200208	NS-71	39100-2S600				
D22 4WD	QD32	4FAT	3200	199712	200208	NS-71	39211-58G60				
D22 4WD	QD32	4FAT	3200	199712	200208	NS-71	39100-2S660				
ELGRAND											

NISSAN

MODEL	ENGINE	AT/MT	CC	YEAR	YEAR	OUTER	O.E No.R	INNER R	O.E No.IR	INNER L	O.E No.IL
E50 4WD	ZD30DDTI	4AT	3000	199908	200205	NS-201	39100-58G60				
E50 4WD	VQ35DE	4AT	3500	200008	200205	NS-201	39100-58G60				
EXA											
KEN13 4WD	CA16DE	AT	1600	198610	199007	NS-11	39100-65A10				
KEN13 4WD	CA16DE	MT	1600	198610	199007	NS-11	39100-65A00				
EXPERT											
VW11	QG18DE	4AT	1800	199906	200512	NS-TN-A44	39100-WA012				
VNW11 4WD	QG18DE	4AT	1800	199906	200512	NS-TN-A44	39100-WA512			NSIU-Y11	39711-64E00
VNW11 4WD	QG18DE	4AT	1800	199906	200512	NS-TN-A44	39100-WA502			NSIU-Y11	39711-64E00
VEW11	YD22DD	4AT	2200	199906	200512		39100-WA415				
VEW11	YD22DD	4AT	2200	199906	200512		39101-WA405				
VEW11	YD22DD	5MT	2200	199906	200512		39100-WA410				
VEW11	YD22DD	5MT	2200	199906	200512		39100-WA400				
VENW11 4WD	YD22DD	4AT	2200	199906	200512	NS-W11A44	39100-WA515				
VENW11 4WD	YD22DD	4AT	2200	199906	200512	NS-W11A44	39100-WA505				
FIGARO											
FK10	MA10ET	AT	1000	199102	199112		39100-28B10				
FUGA											
Y50 4WD	VQ35DE	AT	3500	200410	200712		39211-EG000		39711-CG000	NSIU-Y11	39711-64E00
Y50 4WD	VQ35HR	AT	3500	200712			39211-EG000		39711-CG000	NSIU-Y11	39711-64E00
GT-R											
R35	VR38DETT	AT	3800	200711			39211-EG000		39711-CG000	NSIU-Y11	39711-64E00
HOMY ELGRAND											
E50 4WD	QD32ETI	4AT	3200	199705	199908	NS-201	39100-58G00				
E50 4WD	VG33E	4AT	3300	199705	200008	NS-201	39100-58G00				
LAFESTA											
B30	MR20DE	AT	2000	200412		NS-J31B	39211-CN000		39771-EN000		39771-EN000
B30 4WD	MR20DE	AT	2000	200412		NS-J31B	39211-CN000		39771-EN100		39771-EN100
B30 4WD	MR20DE	AT	2000	200412			39211-EN100	NSIU-XTR	39711-2U600	NSIU-XTR	39711-2U600
LANGLEY LIVERTAVILLA											
N12	E15	AT	1500	198205	198610	NS-04	39100-13A00				
N12	E15	MT	1500	198205	198610	NS-04	39100-11M05				
N12	E15ET	MT/AT	1500	198205	198610	NS-22	39100-15A05				
N13	E15	MT/AT	1500	198610	198809	NS-07	39100-50A00				
N13	E15	4AT	1500	198610	198809	NS-11	39100-60A10				
N13	E15E	MT/AT	1500	198701	198809	NS-11	39100-51M00				
N13	GA15	MT/AT	1500	198809	199007	NS-07	39100-50A00				
N13	GA15	4AT	1500	198809	199007	NS-07	39100-52A00				
N13 4WD	GA15	MT/AT	1500	198809	199007	NS-19	39100-70A10				
N13 4WD	GA15	MT/AT	1500	198809	199007	NS-19	39100-70A20				
BEN13	CA16	AT	1600	198610	199007	NS-11	39100-65A10				
BEN13	CA16	MT	1600	198610	199007	NS-11	39100-65A00				
SN12	CD17	MT	1700	198305	198610	NS-04	39100-13A10				
BSN13	CD17	AT	1700	198610	199007		39100-50A20				
BSN13	CD17	MT	1700	198610	199007	NS-07	39100-50A10				
LARGO											
C22 4WD	CA18ET	MT/AT	1800	199605	199304	NS-25	39100-78G00				
C22 4WD	CA20	MT/AT	2000	198611	199304	NS-25	39100-78G00				
C22 4WD	LD20	MT	2000	198611	199304	NS-25	39100-78G00				
C22 4WD	LD20T	MT/AT	2000	198611	199304	NS-25	39100-78G00				
W30 4WD	CD20TI	MT/AT	2000	199305	199610	NS-19	39100-1C100				
W30 4WD	CD20TI	MT/AT	2000	199305	199610	NS-19A42	39100-5C510				
UD7 4WD	CD20TI	4AT	2000	199305		NS-19	39100-1C100				
UD7 4WD	CD20TI	4AT	2000	199305		NS-19	39211-65J00				
UD7 4WD	CD20TI	4AT	2000	199305		NS-19A42	39100-5C510				
UD7 4WD	CD20TI	4AT	2000	199305		NS-19A42	39211-5C510				
W30 4WD	CD20TI	MT/AT	2000	199610	199906	NS-19A42	39100-1C110				
W30 4WD	KA24DE	MT/AT	2400	199305	199610	NS-19	39100-1C100				
W30 4WD	KA24DE	MT/AT	2400	199305	199610	NS-19A42	39100-5C510				
ED7 4WD	KA24DE	4AT	2400	199305		NS-19	39100-1C100				
ED7 4WD	KA24DE	4AT	2400	199305		NS-19	39211-65J00				
ED7 4WD	KA24DE	4AT	2400	199305		NS-19A42	39100-5C510				
ED7 4WD	KA24DE	4AT	2400	199305		NS-19A42	39211-5C510				
W30 4WD	KA24DE	MT/AT	2400	199610	199906	NS-19A42	39100-1C110				
LAUREL											
C34	RB25DE	4AT	2500	199409	199706	NS-51A46	39100-23U00				
C34	RB25DE	4AT	2500	199409	199706	NS-51A46	39100-23U60				
C35	RB25DE	4AT	2500	199710		NS-51A46	39100-23U00				
C35	RB25DE	4AT	2500	199710		NS-51A46	39100-23U60				
LAUREL SPIRIT											
B11	E15 E	MT/AT	1500	198201	198608	NS-04	39100-13A00				
B11	E15S E	MT/AT	1500	198201	198608	NS-04	39100-11M05				
B11	E15T	MT/AT	1500	198201	198608	NS-22	39100-15A05				
B12	E15S	MT/AT	1500	198608	198709	NS-07	39100-50A00				
B12	E15E	AT	1500	198608	198709	NS-11	39100-60A10				
B12	E15E	MT	1500	198608	198709	NS-07	39100-50A00				
B12	GA15SE	MT/AT	1500	198709	199003	NS-07	39100-50A00				
B12	GA15SE	4AT	1500	198709	198905	NS-07	39100-52A00				
B12 4WD	GA15SE	MT/AT	1500	198709	199003	NS-19	39100-70A10				
B12 4WD	GA15SE	MT/AT	1500	198709	199003	NS-19	39100-70A20				
B12	GA15SE	4AT	1500	198905	199003	NS-07	39100-77A00				
EB12	CA16D	AT	1600	198608	199003	NS-11	39100-65A10				
EB12	CA16D	MT	1600	198608	199003	NS-11	39100-65A00				
SB11	CD17	AT	1700	198311	198608	NS-04	39100-13A20				
SB11	CD17	MT	1700	198311	198608	NS-04	39100-13A10				
SB12	CD17	AT	1700	198608	199003		39100-50A20				
SB12	CD17	MT	1700	198608	199003	NS-07	39100-50A10				
MARCH/MICRA											
K10	MA10S	MT	1000	198201	198801	NS-10	39100-01B05				
K10	MA10S	AT	1000	198201	198801	NS-10	39100-01B11				

NISSAN

MODEL	ENGINE	AT/MT	CC	YEAR	YEAR	OUTER	O.E No.R	INNER R	O.E No.IR	INNER L	O.E No.IL
K10	MA10S	MT/AT	1000	198310	198901	NS-10	39100-01B02				
K10	MA10S	AT	1000	198310	198901	NS-10	39100-01B15				
K10	MA10S	MT	1000	198310	198901	NS-10	39100-01B60				
K10	MA10T	AT	1000	198310	198901		39100-17B10				
K10	MA10T	MT	1000	198310	198901		39100-17B00				
EK10	MA09RT	MT	1000	198808	199201		39100-28B05				
K10	MA10S	AT	1000	198901	199201	NS-41	39100-24B10				
K10	MA10S	MT	1000	198901	199201	NS-41	39100-24B00				
EK10	MA09RT	AT	1000	198901	199201		39100-28B10				
K10	MA10T	AT	1000	198910	199201		39100-28B10				
K10	MA10T	MT	1000	198910	199201		39100-28B00				
K11	CG10DE	AT	1000	199201	199512	NS-43	39100-41B05				
K11	CG10DE	AT	1000	199201	199512	NS-43A42	39100-45B00				
K11	CG10DE	MT	1000	199201	199512	NS-43	39100-41 B00				
K11	CG10DE	CVT	1000	199201		NS-44	39100-44B10				
K11	CG10DE	CVT	1000	199201		NS-44A42	39100-44B12				
K11	CG10DE	MT	1000	199201		NS-43A42	39100-4F100				
K11	CG10DE	MT/AT/CV	1000	199201	199705	NS-44A42	39100-44B12				
K11	CG10DE	MT/AT/CV	1000	199201	199905	NS-44	39100-44B02				
K11	CG10DE	5MT	1000	199201	199705	NS-43A42	39100-41B10				
K11	CG10DE	5MT	1000	199201	199705	NS-43	39100-41B00				
K11	CG10DE	4AT	1000	199201	199911		39100-45B15				
K11	CG10DE	4AT	1000	199201		NS-43	39100-41B05				
K11	CG10DE	CVT	1000	199201	199911	NS-43A42	39100-45B10				
K11	CG10DE	CVT	1000	199201		NS-43	39100-45B00				
K11	CG10DE	MT/AT/CV	1000	199705			39100-72B15				
K11	CG10DE	5MT	1000	199705	199911	NS-43A42	39100-45B10				
K11	CG10DE	5MT	1000	199705		NS-43	39100-45B00				
K11	CG10DE	MT/AT/CV	1000	199905			39100-72B05				
K11	CG10DE	5MT	1000	199911			39100-AN010				
K11	CG10DE	4AT	1000	199911			39100-AN015				
K11	CG10DE	CVT	1000	199911			39100-AN610				
K12E	CG10DE	5MT	1000	200211	200505	NS-K12E	39211-AY125				
K12	CR10DE	4AT/F	1000	200202		NS-68	39100-AX005	NSIU-K12	39205-AY125	NSIU-K12	39204-AY125
K12	CR10DE	4AT	1000	200202	200307	NS-68	39100-AX005	NSIU-K12	39205-AY125	NSIU-K12	39204-AY125
K12E	CG12DE	MT/AT	1200	200211	200505	NS-K12E	39211-AY125				
K12E	CR12DE	MT/AT	1200	200505		NS-K12E	39211-AY125				
K12	CR12DE	4AT/F	1200	200202		NS-68	39101-AX005	NSIU-K12	39205-AY125	NSIU-K12	39204-AY125
K12	CR12DE	5MT/F	1200	200202		NS-68	39100-AX000	NSIU-K12	39205-AY125	NSIU-K12	39204-AY125
K12	CR12DE	4AT	1200	200202		NS-68	39100-AX005	NSIU-K12	39205-AY125	NSIU-K12	39204-AY125
K12	CR12DE	4AT	1200	200202		NS-68	39100-AX000	NSIU-K12	39205-AY125	NSIU-K12	39204-AY125
HK11	CG13DE	MT/CVT	1300	199201	199512	NS-44	39100-44B00				
HK11	CG13DE	MT/CVT	1300	199201	199512	NS-44	39100-44B02				
HK11	CG13DE	MT/CVT	1300	199201		NS-44A42	39100-44B12				
HK11	CG13DE	MT/CVT	1300	199201		NS-44A42	39100-44B10				
HK11	CG13DE	AT	1300	199201		NS-44	39100-4F400				
HK11	CG13DE	MT/AT	1300	199201	199512	NS-44A42	39100-44B10				
HK11	CG13DE	MT/AT/CV	1300	199201	199705	NS-44A42	39100-44B12				
HK11	CG13DE	MT/AT/CV	1300	199201	199905	NS-44	39100-44B02				
HK11	CG13DE	MT/CVT	1300	199512	199711		39100-72B10				
HK11	CG13DE	MT/AT/CV	1300	199705			39100-72B15				
HK11	CG13DE	MT/NCVT	1300	199708			39100-72B15/0				
HK11	CG13DE	4AT	1300	199711			39100-2U310				
HK11	CG13DE	4AT	1300	199711			39100-72 B00				
HK11	CG13DE	MT/AT/CV	1300	199905			39100-72 B05				
AK11	CGA3DE	MT/AT/CV	1300	199911			39100-72B15				
AK11	CGA3DE	MT/AT/CV	1300	199911			39100-72B05				
AK11	CGA3DE	MT/AT/CV	1300	199911			39100-AN110				
AK11	CGA3DE	4AT	1300	199911			39100-AN115				
AK11	CGA3DE	CVT	1300	199911			39100-AN610				
ANK11 4WD	CGA3DE	CVT	1300	199911			39100-72B15			NSIU-Y11	39711-64E00
ANK11 4WD	CGA3DE	CVT	1300	199911			39100-72B05			NSIU-Y11	39711-64E00
ANK11 4WD	CGA3DE	CVT	1300	199911			39100-AN610			NSIU-Y11	39711-64E00
K12E	CGA3DE	MT/AT/CV	1300	200211	200505	NS-K12E	39211-AY125				
K12E	CR14DE	MT/AT	1400	200505		NS-K12E	39211-AY125				
K12	CR14DE	4AT/F	1400	200202		NS-68	39100-AX005	NSIU-K12	39205-AY125	NSIU-K12	39204-AY125
K12 4WD	CR14DE	4AT/F	1400	200202		NS-68	39100-AX005	NSIU-K12	39205-AY125	NSIU-K12	39204-AY125
K12	CR14DE	4AT	1400	200202		NS-68	39100-AX005	NSIU-K12	39205-AY125	NSIU-K12	39204-AY125
K12 4WD	CR14DE	4AT	1400	200209		NS-68	39100-AX005	NSIU-K12	39205-AY125	NSIU-K12	39204-AY125
K12E	HR16DE	MT	1600	200505	200804	NS-NT	39211-BC50J		39204-BC525		39205-BC525
K12E	HR16DE	MT	1600	200804		NS-NT	39211-BC50J		C9204-BC55A		C9205-BC55A
ANK11 4WD	CGA3DE	AT	1300	199201	200202		39211-2U610	NSIU-XTR	39711-2U600	NSIU-XTR	39711-2U600
K12 4WD	CR14DE	AT	1400	200209	200508		39211-AX400	NSIU-XTR	39711-2U600	NSIU-XTR	39711-2U600
K12 4WD	CR14DE	AT	1400	200508			39211-EN100	NSIU-XTR	39711-2U600	NSIU-XTR	39711-2U600

MAXIMA

J30	VG30E	MT/AT	3000	198801		NS-16	39100-85E00				
J30	VG30E	MT/AT	3000	198801	199108	NS-16	39100-85E10				
J30	VE30DE	AT	3000	199108	199402	NS-16	39100-87E10				

MOCO

MG21S	K6A	AT/CVT	660	200204			39100-4A043				
MG21S	K6A TBO	AT/CVT	660	200204			39100-4A0A5				
MG21S4WD	K6A	AT/CVT	660	200204			39100-4A0A4				
MG21S4WD	K6A TBO	AT/CVT	660	200204			39100-4A0A4				

MURANO

JAZ50	QR25DE	4AT/F	2500	200409		NS-74	39100-CB300				
KWZ50	VQ35DE	CVT/F	3500	200409		NS-75	39100-CA100				
KWZ50 4WD	VQ35DE	CVT/F	3500	200409		NS-75	39100-CA000				
KWZ50 4WD	VQ35DE	CVT/F	3500	200409	200710		39211-CA000	NSIU-XTR	39711-2U600	NSIU-XTR	39711-2U600
Z51 4WD	VQ35DE	CVT/F	3500	200710			39211-CA000	NSIU-XTR	39711-2U600	NSIU-XTR	39711-2U600

NAVARA

NISSAN

MODEL	ENGINE	AT/MT	CC	YEAR	YEAR	OUTER	O.E No.R	INNER R	O.E No.IR	INNER L	O.E No.IL
D40 4WD	YD25DDTi	MT/AT	2500	200501	200609	NS-P31	C9211-EB30A	NSIU-R51	39741-7Y028	NSIU-R51	39741-7Y028
D40 4WD	YD25DDTi	MT/AT	2500	200609	200705	NS-P32	C9211-EB31A	NSIU-R51	39741-7Y029	NSIU-R51	39741-7Y029
D40 4WD	YD25DDTi	MT/AT	2500	200705		NS-P31	C9211-EB30A	NSIU-R51	39741-7Y028	NSIU-R51	39741-7Y028
D40 4WD	VQ40DE	AT	4000	200501	200609	NS-P31	C9211-EB30A	NSIU-R51	39741-7Y028	NSIU-R51	39741-7Y028
D40 4WD	VQ40DE	AT	4000	200609	200705	NS-P32	C9211-EB31A	NSIU-R51	39741-7Y029	NSIU-R51	39741-7Y029
D40 4WD	VQ40DE	AT	4000	200705		NS-P31	C9211-EB30A	NSIU-R51	39741-7Y028	NSIU-R51	39741-7Y028
NOTE											
E11E	CR14DE	MT/AT	1400	200601		NS-NT	39211-BC50J		39204-1U625		39205-1U625
E11E	HR16DE	MT	1600	200601		NS-NT	39211-BC50J		39204-BC525		39205-BC525
E11E	HR16DE	AT	1600	200601		NS-NT	39211-BC50J		39204-9U00J		39205-9U00J
NX COUPE											
FB13	GA15DS	AT	1500	199001	199312	NS-13	39100-51Y00				
FB13	GA15DS	AT	1500	199001	199312	NS-13A42	39100-51Y10				
FB13	GA15DS	MT	1500	199001	199312	NS-13	39100-50Y00				
FB13	GA15DS	MT	1500	199001	199312	NS-13A42	39100-50Y10				
EB13	GA16DE	AT	1600	199001	199312	NS-17	39100-60Y05				
EB13	GA16DE	AT	1600	199001	199312	NS-17A42	39100-60Y15				
EB13	GA16DE	MT	1600	199001	199312	NS-17	39100-60Y00				
EB13	GA16DE	MT	1600	199001	199312	NS-17A42	39100-60Y10				
HB13	SR18DE	AT	1800	199001	199312	NS-20	39100-64Y05				
HB13	SR18DE	AT	1800	199001	199312	NS-20	39100-64Y15				
HB13	SR18DE	MT	1800	199001	199312	NS-20	39100-64Y00				
HB13	SR18DE	MT	1800	199001	199312	NS-20	39100-64Y10				
PAO											
PK10	MA10S	MT	1000	198901	199010	NS-41	39100-24B00				
PK10	MA10S	AT	1000	198910	199010	NS-41	39100-24B10				
PRAIRIE/LIBERTY											
PM12	SR20DE	CVT	2000	199811		NS-29	39100-WF115				
PM12	SR20DE	CVT	2000	199811		NS-29	39100-WF175				
PM12	SR20DE	CVT	2000	199811		NS-29	39100-WF110				
PM12	SR20DE	CVT	2000	199811		NS-29	39100-WF170				
PNM12 4WD	SR20DE	4AT	2000	199811		NS-30	39100-WA270			NSIU-Y11	39711-64E00
PNM12 4WD	SR20DE	4AT	2000	199811		NS-30	39100-WA270			NSIU-Y11	39711-64E00
PNM12 4WD	SR20DET	4AT	2000	199811		NS-30	39100-WA270			NSIU-Y11	39711-64E00
PNM12 4WD	SR20DET	4AT	2000	199811		NS-30	39100-WA270			NSIU-Y11	39711-64E00
PRAIRIE											
BM/VBM10	E15S	MT	1500	198208	198501	NS-22	39100-16R05				
BM/VBM10	E15S	MT/AT	1500	198501	198901	NS-22	39100-16R05				
PM10	CA18S	MT/AT	1800	198208	198808	NS-22	39100-16R05				
PM10	CA18S	AT	1800	198601	198808	NS-28	39100-17R00				
HNM10 4WD	CA20S	MT/AT	2000	198501	198801	NS-16	39100-06R00			NSIU-Y11	39711-64E10
M11	CA20S	MT/AT	2000	198801	199508	NS-09	39100-32R00				
M11	CA20S	MT/AT	2000	198801	199508	NS-31	39100-30R00				
NM11	CA20S	MT/AT	2000	198809	199508	NS-19	39100-64E00				
NM11	CA20S	MT/AT	2000	198809	199508	NS-19A42	39100-64E10				
PNM11 4WD	SR20DE	AT	2000	199508	199811	NS-19	39100-64E05				
PM11	SR20DE	AT	2000	199508	199811	NS-09	39100-50R00				
PM11	SR20DE	AT	2000	199508	199811	NS-09A42	39100-50R10				
PNM11 4WD	SR20DE	AT	2000	199508	199811	NS-34	39100-64E15				
HM11	KA24E	MT/AT	2400	198809	199508	NS-31	39100-30R00				
HNM11 4WD	KA24E	MT/AT	2400	199009	199508	NS-19	39100-64E00			NSIU-Y11	39711-64E00
HNM11 4WD	KA24E	MT/AT	2400	199009	199508	NS-19A42	39100-64E10			NSIU-Y11	39711-64E00
PRESAGE											
U30	KA24DE	4AT	2400	199806	200306	NS-36	39100-5V010				
U30	KA24DE	4AT	2400	199806	200306	NS-36	39100-5V010				
U30	KA24DE	4AT	2400	199806	200306	NS-36	39100-5V070				
HU30 4WD	KA24DE	4AT	2400	199806			39100-AD315				
TU30	YD25DDTI	4AT	2500	199806			39100-5V010				
TU30	YD25DDTI	4AT	2500	199806			39100-5V010				
TNU30 4WD	YD25DDTI	4AT	2500	199806			39100-AD317				
HU30	VQ30DE	4AT	3000	199806			39100-AD115				
HU30	VQ30DE	4AT	3000	199806			39100-5V010				
U31	QR25DE	4AT	2500	200306		NS-J31B	39211-CN000				
U31 4WD	QR25DE	4AT	2500	200306		NS-J31C	39211-9Y300				
U31	VQ35DE	CVT	3500	200306			39211-CA100				
U31 4WD	VQ35DE	CVT	3500	200306			39211-CA100				
JU30 4WD	QR25DE	4AT	2500	199911	200306	NS-XRA44	39211-8H510	NSIU-XTR	39711-2U600	NSIU-XTR	39711-2U600
U31 4WD	QR25DE	4AT	2500	200306			39211-CA000	NSIU-XTR	39711-2U600	NSIU-XTR	39711-2U600
U31 4WD	VQ35DE	CVT	3500	200306			39211-CA000	NSIU-XTR	39711-2U600	NSIU-XTR	39711-2U600
PRESEA											
R10	GA15DS	AT	1500	199001	199501	NS-13	39100-51Y00				
R10	GA15DS	MT	1500	199001	199501	NS-13	39100-50Y00				
R10	GA15DS	MT/AT	1500	199001	199501	NS-13A42	39100-50Y10				
R10	GA15DS	MT/AT	1500	199001	199401	NS-13A42	39100-50Y10				
R10	GA15DS	MT/AT	1500	199001	199501	NS-13A42	39100-51Y10				
R11	GA15DE	AT	1500	199501	199708	NS-13	39100-0M005				
R11	GA15DE	AT	1500	199501	199708	NS-13A42	39100-0M015				
R11	GA15DE	MT	1500	199501	199708	NS-17	39100-40Y06				
R11	GA15DE	MT	1500	199501	199708	NS-17A42	39100-0M311				
PR10	SR18DE	MT/AT	1800	199001	199401	NS-20	39100-64Y00				
PR10	SR18DE	MT/AT	1800	199001	199401	NS-20	39100-64Y05				
PR10	SR18DE	MT/AT	1800	199001	199401	NS-20	39100-64Y10				
PR10	SR18DE	MT/AT	1800	199001	199401	NS-20	39100-64Y15				
PR10	SR18DI	MT/AT	1800	199006	199501	NS-17	39100-61Y06				
PR10	SR18DI	MT/AT	1800	199006	199501	NS-17A42	39100-61Y16				
PR11	SR18DE	MT/AT	1800	199501	199708	NS-17	39100-40Y00				
PR11	SR18DE	MT/AT	1800	199501	199708	NS-17A42	39100-40Y10				
HR10	SR20DE	MT/AT	2000	199001	199501	NS-20	39100-64Y00				
HR10	SR20DE	MT/AT	2000	199001	199501	NS-20	39100-64Y05				
HR10	SR20DE	MT/AT	2000	199001	199501	NS-20	39100-64Y10				

NISSAN

MODEL	ENGINE	AT/MT	CC	YEAR	YEAR	OUTER	O.E No.R	INNER R	O.E No.IR	INNER L	O.E No.IL
HR10	SR20DE	MT/AT	2000	199001	199501	NS-20	39100-64Y15				
HR11	SR20DE	MT/AT	2000	199501	199708	NS-55	39100-40Y05				
HR11	SR20DE	MT/AT	2000	199501	199708	NS-55A42	39100-40Y15				
PRIMERA CAMINO											
P10	SR18DI E	MT/AT	1800	199002	199509	NS-31	39100-53J00				
P10	SR18DI E	MT/AT	1800	199002	199509	NS-31	39100-53J20				
P10	SR18DI E	AT	1800	199409	199509	NS-31	39100-53J00				
P10	SR18DI E	AT	1800	199409	199509	NS-31	39100-53J20				
P11	SR18DE	MT/AT	1800	199509	200101	NS-34A44	39100-3J110				
P11	SR18DE	MT/AT	1800	199709	200101	NS-34A44	39211-0E015				
P11	SR18DE	5MT	1800	199509	200101	NS-66A44	39100-2J211				
P11	SR18DE	MT/AT	1800	199509	199809	NS-65A44	39100-3J171				
P11	SR18DE	5MT	1800	199509	199809	NS-66A44	39100-2J201				
P11	SR18DE	MT/AT	1800	199509	199809	NS-29	39100-3J161				
P11	SR18DE	4AT	1800	199509	199809	NS-66A44	39100-2J216				
P11	SR18DE	4AT	1800	199509	199809	NS-66A44	39100-2 J206				
P11	QG18DE	5MT	1800	199809	200101	NS-65A44	39100-6J071				
P11	QG18DE	MT/AT	1800	199809	200101	NS-66A44	39100-2J201				
P11	QG18DE	MT/AT	1800	199809	200101	NS-29	39100-3J161				
P11	QG18DE	4AT	1800	199809	200101	NS-66A44	39100-6J016				
P11	QG18DE	4AT	1800	199809	200101	NS-65A44	39100-6J076				
P11	QG18DE	4AT	1800	199809	200101	NS-66A44	39100-2 J206				
P11	QG18DD	CVT	1800	199809	200101	NS-66A44	39100-6J016				
P11	QG18DD	CVT	1800	199809	200101	NS-65A44	39100-6J915				
P11	QG18DE	MT/AT	1800	199906		NS-57A44	39211-2F225				
P11	QG18DE	5MT	1800	200004	200101	NS-65A44	39100-6J071				
P11	QG18DE	5MT	1800	200006	200101	NS-66A44	39100-6J011				
P12EDA	QG18DE	4AT/F	1800	200202		NS-76A44	39100-AU115				
HP10	SR20DE	MT/AT	2000	199002	199509	NS-31	39100-53J00			NSID-5013	39711-53J00
HP10	SR20DE	MT/AT	2000	199002	199509	NS-31	39100-53J20			NSID-5013	39711-53J00
HNP10 4WD	SR20DE	AT	2000	199010	199509	NS-19	39100-65J00				
HNP10 4WD	SR20DE	AT	2000	199010	199509	NS-19A42	39100-65J10				
HNP10 4WD	SR20DE	MT	2000	199010	199509	NS-19	39100-65J00				
HNP10 4WD	SR20DE	MT	2000	199010	199509	NS-19A42	39100-65J10				
P10	SR20DI	4AT	2000	199101	199312	NS-51	39100-72J15				
P10	SR20DE	4AT	2000	199101	199312	NS-51	39210-73J26				
P10	SR20DI	4AT	2000	199101	199312	NS-51A42	39100-72J27				
P10	SR20DE	4AT	2000	199101	199312	NS-51A42	39210-73J27				
HP11	SR20DE	AT	2000	199509	199709	NS-29	39100-2 J205				
HP11	SR20DE	AT	2000	199509	199709	NS-65A44	39100-2J215				
HP11	SR20DE	MT	2000	199509	199709	NS-45	39100-2J200				
HP11	SR20DE	MT	2000	199509	199709	NS-65A44	39100-2 J210				
HNP11 4WD	SR20DE	AT	2000	199509	199711	NS-19	39100-65J00				
HNP11 4WD	SR20DE	AT	2000	199509	199711	NS-19	39100-65J00				
HNP11 4WD	SR20DE	AT	2000	199509	199711	NS-19A42	39100-65J10				
P11	SR20DE	5MT	2000	199509	200101	NS-66A44	39100-2 J211				
P11	SR20DE	5MT	2000	199509	200101	NS-66A44	39100-2 J201				
P11	SR20DE	MT/AT	2000	199509	200101	NS-29	39100-3J161				
P11	SR20DE	5MT	2000	199509	200101	NS-65A44	39100-2 J210				
P11	SR20DE	4AT	2000	199509	199809	NS-66A44	39100-2J216				
P11	SR20DE	4AT	2000	199509	199809	NS-66A44	39100-2 J206				
P11	SR20DE	MT/AT	2000	199509	200101	NS-29	39100-2 J205				
P11	SR20DE	4AT	2000	199509	199607	NS-65A44	39100-2J215				
P11 4WD	SR20DE	5MT	2000	199509	200101	NS-29	39100-3J161				
P11 4WD	SR20DE	4AT	2000	199509	200101	NS-66A44	39100-2 J206				
P11 4WD	SR20DE	4AT	2000	199509	200101	NS-29	39100-3J161				
P11	SR20DE	MT/AT	2000	199608	200101	NS-29	39100-3J161				
P11	SR20DE	MT/AT	2000	199704	200101	NS-65A44	39100-3J171				
P11	SR20DE	CVT	2000	199704	199809	NS-65A44	39100-3J171				
P11	SR20DE	CVT	2000	199709	199809	NS-66A44	39100-5J016				
P11	SR20DE	CVT	2000	199709	199907	NS-65A44	39100-5J010				
P11	SR20VE	CVT	2000	199709	200101	NS-66A44	39100-5J016				
P11 4WD	SR20DE	5MT	2000	199809	200101	NS-66A44	39100-2 J201				
P11	SR20VE	CVT	2000	199908	200101	NS-65A44	39100-3J171				
P12EDA	QR20DE	CVT/F	2000	200101		NS-65A44	39100-AU416				
P12EDA	QR20DE	CVT/F	2000	200101		NS-65A44	39100-AU415				
P12EDA 4WD	QR20DE	4AT/F	2000	200108		NS-65A44	39100-AE415				
P12DDA	QR25DD	CVT/F	2500	200101		NS-65A44	39100-AU416				
P12DDA	QR25DD	CVT/F	2500	200101		NS-65A44	39100-AU415				
PRIMERA UK											
P10	GA16	MT	1600	199001	199612	NS-51	39100-73J00			NSIU-EP16	39204-2F025
P10	GA16	MT	1600	199001	199612	NS-51A42	39710-70A01			NSIU-EP16	39204-2F025
P11	GA16DE	MT/AT	1600	199509	200101	NS-51	39211-2F026			NSIU-EP16	39204-2F025
P11	GA16DE	MT/AT	1600	199509	200101	NS-P11A44	39211-2F025			NSIU-EP16	39204-2F025
P11	QG16DE	MT/AT	1600	199909	200201	NS-P11A44	39211-2F225	NSIU-626	39204-9F627	NSIU-626	39204-9F626
P11	QG18DE	MT/AT	1800	199909	200201	NS-P11A44	39211-2F225	NSIU-P11E	39204-9F628	NSIU-P11E	39205-9F628
P11	SR20DE	MT/AT	2000	199602	200101	NS-57	39211-2F226	NSIR-EP20	39204-2F225	NSIL-EP20	39204-2F226
P11	SR20DE	MT/AT	2000	199602	200101	NS-57A44	39211-2F225	NSIR-EP20	39204-2F225	NSIL-EP20	39204-2F226
P10	CD20	MT	2000	199001	199509	NS-51	39100-72J10				
FHP10	SR20DE	MT	2000	199001	199509	NS-26	39100-71J00				
FHP10	SR20DE	MT	2000	199001	199509	NS-26A42	39100-71J10				
P11	CD20T	MT/AT	2000	199602	200101	NS-57	39211-2F226	NSIR-EP20	39204-2F225	NSIL-EP20	39204-2F226
P11	CD20T	MT/AT	2000	199606	200101	NS-57A44	39211-2F225	NSIR-EP20	39204-2F225	NSIL-EP20	39204-2F226
P10	CD20	AT	2000	199001	199509	NS-51	39100-72J10				
P10	CD20	4AT	2000	199101	199312	NS-51	39710-70A10				
P10	CD20	4AT	2000	199101	199312	NS-51A42	39710-70A01				
P12E	QG16DE	MT/AT	1600	200112	200508	NS-P12A44	39211-AU325	NSIU-P12	39204-AU025	NSIU-P12	39205-AU026
P12E	QG16DE	MT/AT	1600	200508		NS-P12A44	C9211-AU31A	NSIU-P12	39204-AU025	NSIU-P12	39205-AU026
P12E	QG18DE	AT	1800	200112	200508	NS-P12A44	39211-AU325		39204-AU325		39205-AU325
P12E	QG18DE	MT	1800	200112	200508	NS-P12A44	39211-AU325		39204-AU326		39205-AU326

NISSAN

MODEL	ENGINE	AT/MT	CC	YEAR	YEAR	OUTER	O.E No.R	INNER R	O.E No.IR	INNER L	O.E No.IL
P12E	QG18DE	AT	1800	200508		NS-P12A44	C9211-AU31A		39204-AU325		39205-AU325
P12E	QG18DE	MT	1800	200508		NS-P12A44	C9211-AU31A		39204-AU326		39205-AU326
P12E	QR20DE	6MT	2000	200108	200307	NS-364A44	39100-AV611				
P12E	QR20DE	6MT	2000	200308		NS-364A44	39100-AV911				
P12E	YD22DDT	6MT	2200	200108		NS-364A44	39100-AV911				
PRIMERA/PRIMERA CAMINO/PRIMERA WAGON											
P10	SR18DI E	MT/AT	1800	199002	199509	NS-31	39100-53J00				
P10	SR18DI E	MT/AT	1800	199002	199509	NS-31	39100-53J20				
P10	SR18DI E	AT	1800	199409	199509	NS-31	39100-53J00				
P10	SR18DI E	AT	1800	199409	199509	NS-31	39100-53J20				
P11	SR18DE	MT/AT	1800	199509	200101	NS-34A44	39100-3J110				
P11	SR18DE	MT/AT	1800	199709	200101	NS-34A44	39211-0E015				
P11	SR18DE	5MT	1800	199509	200101	NS-66	39100-2J211				
P11	SR18DE	MT/AT	1800	199509	199809	NS-65A44	39100-3J171				
P11	SR18DE	5MT	1800	199509	199809	NS-66A44	39100-2J201				
P11	SR18DE	MT/AT	1800	199509	199809	NS-29	39100-3J161				
P11	SR18DE	4AT	1800	199509	199809	NS-66A44	39100-2J216				
P11	SR18DE	4AT	1800	199509	199809	NS-66A44	39100-2 J206				
P11	QG18DE	5MT	1800	199809	200101	NS-65A44	39100-6J071				
P11	QG18DE	MT/AT	1800	199809	200101	NS-66A44	39100-2J201				
P11	QG18DE	MT/AT	1800	199809	200101	NS-29	39100-3J161				
P11	QG18DE	4AT	1800	199809	200101	NS-66A44	39100-6J016				
P11	QG18DE	4AT	1800	199809	200101	NS-65A44	39100-6J076				
P11	QG18DE	4AT	1800	199809	200101	NS-66A44	39100-2 J206				
P11	QG18DD	CVT	1800	199809	200101	NS-66A44	39100-6J016				
P11	QG18DD	CVT	1800	199809	200101	NS-65A44	39100-6J915				
P11	QG18DE	MT/AT	1800	199906		NS-57A44	39211-2F225				
P11	QG18DE	5MT	1800	200004	200101	NS-65A44	39100-6J071				
P11	QG18DE	5MT	1800	200006	200101	NS-66A44	39100-6J011				
P12EDA	QG18DE	4AT/F	1800	200202		NS-76A44	39100-AU115				
HP10	SR20DE	MT/AT	2000	199002	199509	NS-31	39100-53J00			NSID-5013	39711-53J00
HP10	SR20DE	MT/AT	2000	199002	199509	NS-31	39100-53J20			NSID-5013	39711-53J00
HNP10 4WD	SR20DE	AT	2000	199010	199509	NS-19	39100-65J00			NSIU-Y11	39711-64E00
HNP10 4WD	SR20DE	AT	2000	199010	199509	NS-19A42	39100-65J10			NSIU-Y11	39711-64E00
HNP10 4WD	SR20DE	MT	2000	199010	199509	NS-19	39100-65J00			NSIU-Y11	39711-64E00
HNP10 4WD	SR20DE	MT	2000	199010	199509	NS-19A42	39100-65J10			NSIU-Y11	39711-64E00
P10	SR20DI	4AT	2000	199101	199312	NS-51	39100-72J15				
P10	SR20DE	4AT	2000	199101	199312	NS-51	39210-73J26				
P10	SR20DI	4AT	2000	199101	199312	NS-51A42	39100-72J27				
P10	SR20DE	4AT	2000	199101	199312	NS-51A42	39210-73J27				
HP11	SR20DE	AT	2000	199509	199709	NS-29	39100-2 J205				
HP11	SR20DE	AT	2000	199509	199709	NS-65A44	39100-2J215				
HP11	SR20DE	MT	2000	199509	199709	NS-45	39100-2J200				
HP11	SR20DE	MT	2000	199509	199709	NS-65A44	39100-2 J210				
HNP11 4WD	SR20DE	AT	2000	199509	199711	NS-19	39100-65J00			NSIU-Y11	39711-64E00
HNP11 4WD	SR20DE	AT	2000	199509	199711	NS-19	39100-65J00			NSIU-Y11	39711-64E00
HNP11 4WD	SR20DE	AT	2000	199509	199711	NS-19A42	39100-65J10			NSIU-Y11	39711-64E00
P11	SR20DE	5MT	2000	199509	200101	NS-66A44	39100-2 J211				
P11	SR20DE	5MT	2000	199509	200101	NS-66	39100-2 J201				
P11	SR20DE	MT/AT	2000	199509	200101	NS-29	39100-3J161				
P11	SR20DE	5MT	2000	199509	200101	NS-65A44	39100-2 J210				
P11	SR20DE	4AT	2000	199509	199809	NS-66A44	39100-2J216				
P11	SR20DE	4AT	2000	199509	199809	NS-66A44	39100-2 J206				
P11	SR20DE	MT/AT	2000	199509	200101	NS-29	39100-2 J205				
P11	SR20DE	4AT	2000	199509	199607	NS-65A44	39100-2J215				
P11 4WD	SR20DE	5MT	2000	199509	200101	NS-29	39100-3J161			NSIU-Y11	39711-64E00
P11 4WD	SR20DE	4AT	2000	199509	200101	NS-66A44	39100-2 J206			NSIU-Y11	39711-64E00
P11 4WD	SR20DE	4AT	2000	199509	200101	NS-29	39100-3J161			NSIU-Y11	39711-64E00
P11	SR20DE	MT/AT	2000	199608	200101	NS-29	39100-3J161				
P11	SR20DE	MT/AT	2000	199704	200101	NS-65A44	39100-3J171				
P11	SR20DE	CVT	2000	199704	199809	NS-65A44	39100-3J171				
P11	SR20DE	CVT	2000	199709	199809	NS-66A44	39100-5J016				
P11	SR20DE	CVT	2000	199709	199907	NS-65A44	39100-5J010				
P11	SR20VE	CVT	2000	199709	200101	NS-66A44	39100-5J016				
P11 4WD	SR20DE	5MT	2000	199809	200101	NS-66A44	39100-2 J201			NSIU-Y11	39711-64E00
P11	SR20VE	CVT	2000	199908	200101	NS-65A44	39100-3J171				
P12EDA	QR20DE	CVT/F	2000	200101		NS-65A44	39100-AU416				
P12EDA	QR20DE	CVT/F	2000	200101		NS-65A44	39100-AU415				
P12EDA 4WD	QR20DE	4AT/F	2000	200108		NS-65A44	39100-AE415				
P12DDA	QR25DD	CVT/F	2500	200101		NS-65A44	39100-AU416				
P12DDA	QR25DD	CVT/F	2500	200101		NS-65A44	39100-AU415				
P12 4WD	QR20DE	AT	2000	200101		NS-XRA44	39211-8H510	NSIU-XTR	39711-2U600	NSIU-XTR	39711-2U600
PULSAR/ALMERA											
PN12	E13S	AT	1300	198205	198605	NS-49	39100-03A00				
PN12	E13S	MT	1300	198205	198605	NS-49	39100-01M15				
N13	E13S	AT	1300	198605	198804	NS-11	39100-60A10				
N13	E13S	MT/AT	1300	198605	199007	NS-07	39100-50A00				
N14	GA13DS	AT	1300	199008	199501	NS-13	39100-51Y00				
N14	GA13DS	AT	1300	199008	199501	NS-13A42	39100-51Y10				
N14	GA13DS	MT	1300	199008	199501	NS-13	39100-50Y00				
N14	GA13DS	MT	1300	199008	199501	NS-13A42	39100-50Y10				
SN12	CD17	MT	1700	198305	198610	NS-04	39100-13A10				
SN13	CD17	AT	1700	198605	199007	NS-14	39100-50A20				
SN13	CD17	MT	1700	198605	199007	NS-07	39100-50A10				
SN14	CD17	AT	1700	199008	199501	NS-13A42	39100-53Y00				
SN14	CD17	AT	1700	199008	199501	NS-13A42	39100-53Y10				
SN14	CD17	MT	1700	199008	199501	NS-13A42	39100-52Y00				
SN14	CD17	MT	1700	199008	199501	NS-13A42	39100-52Y10				
RNN14 4WD	SR20DET	MT/AT	2000	199001	199501	NS-17	39100-63Y01				
RNN14 4WD	SR20DET	MT/AT	2000	199001	199501	NS-17	39100-63Y11				

NISSAN

MODEL	ENGINE	AT/MT	CC	YEAR	YEAR	OUTER	O.E No.R	INNER R	O.E No.IR	INNER L	O.E No.IL
SN15	CD20	AT	2000	199501		NS-17	39100-0M905				
SN15	CD20	AT	2000	199501		NS-17A42	39100-0M915				
SN15	CD20	MT	2000	199501		NS-17	39100-0M900				
SN15	CD20	MT	2000	199501		NS-17A42	39100-0M910				
SNN15 4WD	CD20	MT	2000	199501		NS-17	39100-63Y00				
SNN15 4WD	CD20	MT	2000	199501		NS-17A42	39100-63Y10				
PULSAR/LUCINO/ALMERA											
HN12	E15	MT/AT	1500	198101	198601	NS-04	39100-11M00				
HN12	E15	AT	1500	198205	198610	NS-04	39100-13A00				
HN12	E15	MT/AT	1500	198205	198610	NS-04	39100-11M05				
HN12	E15ET	MT/AT	1500	198205	198610	NS-22	39100-15A05				
HN13	E15S E	AT	1500	198605	198804	NS-11	39100-60A10				
HN13	E15S E	MT	1500	198605	198804	NS-07	39100-50A00				
HNN13 4WD	E15S E	MT/AT	1500	198605	198804	NS-11	39100-51M00				
HNN13 4WD	E15S E	MT/AT	1500	198605	198804	NS-11	39100-70A00				
FN13	GA15SE	MT/AT	1500	198804	199007	NS-07	39100-50A00				
FN13	GA15SE	4AT	1500	198804	199007	NS-07	39100-52A00				
FNN13 4WD	GA15SE	MT/AT	1500	198804	199007	NS-19	39100-70A10				
FNN13 4WD	GA15SE	MT/AT	1500	198804	199007	NS-19	39100-70A20				
FN14	GA15DS	AT	1500	199008	199501	NS-13	39100-51Y00				
FN14	GA15DS	AT	1500	199008	199501	NS-13A42	39100-51Y10				
FN14	GA15DS	MT	1500	199008	199501	NS-13	39100-50Y00				
FN14	GA15DS	MT	1500	199008	199501	NS-13A42	39100-50Y10				
FNN14 4WD	GA15DS	AT	1500	199008	199501	NS-17	39100-62Y05				
FNN14 4WD	GA15DS	AT	1500	199008	199501	NS-17A42	39100-62Y15				
FNN14 4WD	GA15DS	MT	1500	199008	199501	NS-17	39100-62Y05				
FNN14 4WD	GA15DS	MT	1500	199008	199501	NS-17A42	39100-62Y15				
FN15	GA15DE	AT	1500	199501	200008	NS-13	39100-0M005				
FN15	GA15DE	AT	1500	199501	200008	NS-13A42	39100-0M015				
FN15	GA15DE	MT	1500	199501	20008	NS-13	39100-0M000				
FN15	GA15DE	MT	1500	199501	200008	NS-13A42	39100-0M010				
FNN15 4WD	GA15DE	AT	1500	199501	200008	NS-17	39100-62Y05				
FNN15 4WD	GA15DE	AT	1500	199501	200008	NS-17A42	39100-62Y15				
FNN15 4WD	GA15DS	MT	1500	199501	200008	NS-17	39100-62Y05	NSIU-JP16	39711-02A05	NSIU-JP16	39711-02A05
FNN15 4WD	GA15DS	MT	1500	199501	200008	NS-17A42	39100-62Y15	NSIU-JP16	39711-02A05	NSIU-JP16	39711-02A05
FN15	GA15DE	5MT	1500	199501	200008	NS-17A42	39100-0M311	NSIU-JP16	39711-02A05	NSIU-JP16	39711-02A05
FN15	GA15DE	5MT	1500	199501	200008		39100-0M301	NSIU-JP16	39711-02A05	NSIU-JP16	39711-02A05
FN15	GA15DE	4AT	1500	199501	200008	NS-55A42	39100-0M316				
FN15	GA15DE	4AT	1500	199501	200008		39100-0M306				
EN13	CA16D	AT	1600	198605	199007	NS-11	39100-65A10				
EN13	CA16D	MT	1600	198605	199007	NS-11	39100-65A00				
EN14	GA16DE	AT	1600	199008	198501	NS-17	39100-60Y05				
EN14	GA16DE	AT	1600	199008	199501	NS-17A42	39100-60Y15				
EN14	GA16DE	MT	1600	199008	199501	NS-17	39100-60Y00				
EN14	GA16DE	MT	1600	199008	199501	NS-17A42	39100-60Y10				
EN15	GA16DE	AT	1600	199501		NS-17	39100-0M605				
EN15	GA16DE	AT	1600	199501		NS-17A42	39100-0M615				
EN15	GA16DE	MT	1600	199501		NS-17	39100-0M600				
EN15	GA16DE	MT	1600	199501		NS-17A42	39100-0M610				
EN15	GA16DE	5MT	1600	199501		NS-17A42	39100-0M311				
EN15	GA16DE	5MT	1600	199501			39100-0M301				
EN15	GA16DE	4AT	1600	199501		NS-55A42	39100-0M316				
EN15	GA16DE	4AT	1600	199501			39100-0M306				
EN15	GA16DE	4AT	1600	199501			39100-0M306				
EN15	GA16DE	MT/AT	1600	199501		NS-55	39100-0M316				
HN14	SR18DE	AT	1800	199008	199501	NS-20	39100-64Y05				
HN14	SR18DE	AT	1800	199008	199501	NS-20	39100-64Y15				
HN14	SR18DE	MT	1800	199008	199501	NS-20	39100-64Y00				
HN14	SR18DE	MT	1800	199008	199501	NS-20	39100-64Y10				
HN15	SR18DE	AT	1800	199501		NS-55	39100-0M806				
HN15	SR18DE	AT	1800	199501		NS-55A42	39100-0M816				
HN15	SR18DE	MT	1800	199501		NS-55	39100-0M801				
HN15	SR18DE	MT	1800	199501		NS-55A42	39100-0M811				
HN15	SR18DE	MT/AT	1800	199501		NS-55	39100-0M806				
HN15 4WD	SR18DE	5MT	1800	199505			39100-1N510				
HN15 4WD	SR18DE	5MT	1800	199505			39100-1N500				
HN15 4WD	SR18DE	4AT	1800	199505			39100-1N515				
HN15 4WD	SR18DE	4AT	1800	199505			39100-1N505				
QASHQAI/DUALIS											
J10E	HR16DE	5MT	1600	200612			C9211-JD02B	NSIR-J10F	39771-JD02B	NSIL-J10F	39711-JD02B
J10E 2WD	MR20DE	6MT	2000	200612		NS-J10	C9211-JA00A		39771-JD22B		39711-JD22B
J10E 2WD	MR20DE	CVT	2000	200612		NS-J10	C9211-JA00A	NSIR-J10	39771-JD22C	NSIL-J10	39711-JD22C
J10E 4WD	MR20DE	6MT	2000	200612		NS-J10	C9211-JA00A		39771-JD24B		39711-JD24B
J10E 4WD	MR20DE	CVT	2000	200612		NS-J10	C9211-JA00A	NSIR-J10W	39771-JD24C	NSIL-J10W	39711-JD24C
J10 4WD	MR20DE	CVT	2000	200712			39211-EN100	NSIU-XTR	39711-2U600	NSIU-XTR	39711-2U600
J10E 4WD	MR20DE	MT/CVT	2000	200612			39211-EN100	NSIU-XTR	39711-2U600	NSIU-XTR	39711-2U600
J10E 4WD	M9R	6MT	2000	200612			39211-EN100	NSIU-XTR	39711-2U600	NSIU-XTR	39711-2U600
QUEST											
V40	VG30E	AT	3000	199204	199809	NS-QT	39210-0B010				
V40	VG30E	AT	3000	199204	199809	NS-QT	39210-7B010				
R'NESSA											
N30	SR20DE	4AT	2000	199710	200107	NS-36	39100-5V000				
N30	SR20DE	4AT	2000	199710	200107	NS-36	39100-5V000				
N30	SR20DE	4AT	2000	199710	200107	NS-36	39100-5V010				
NN30 4WD	SR20DET	4AT	2000	199710			39100-5V200			NSIU-Y11	39711-64E00
PNN30 4WD	KA24DE	4AT	2400	199710			39100-5V200			NSIU-Y11	39711-64E00
ROGUE											
S35 4WD	QR25DE	CVT	2500	200708			39211-EN100	NSIU-XTR	39711-2U600	NSIU-XTR	39711-2U600
RASHEEN											
RFNB14	GA15DE	AT	1500	199412	199701	NS-17	39100-62Y05				

NISSAN

MODEL	ENGINE	AT/MT	CC	YEAR	YEAR	OUTER	O.E No.R	INNER R	O.E No.IR	INNER L	O.E No.IL
RFNB14	GA15DE	AT	1500	199412	199701	NS-17A42	39100-62Y15				
RFNB14	GA15DE	MT	1500	199412	199701	NS-17	39100-62Y05				
RFNB14	GA15DE	MT	1500	199412	199701	NS-17A42	39100-62Y15				
SAFARI/PATROL											
Y61	RD28ETI	4AT/F	2800	199710	199909	NS-73	39100-VB001				
Y61	RD28ETI	5MT/F	2800	199710	199909	NS-73	39100-VB001				
Y61	ZD30DDTI	4AT/F	3000	199909	200211	NS-73	39100-VB001				
Y61	ZD30DDTI	5MT/F	3000	199909	200211	NS-73	39100-VB001				
Y60	TB42 /TD42	MT/AT	4200	198701		NS-23	39100-10J00				
Y60	TB42 /TD42	MT/AT	4200	198711		NS-23	39100-01J010				
Y61	TD42T	4AT/F	4200	199710		NS-73	39100-VB001				
Y61	TD42T	5MT/F	4200	199710		NS-73	39100-VB001				
Y61	TB45E	4AT/F	4500	199710		NS-73	39100-VB001				
Y61	TB48DE	5MT/F	4800	200211		NS-73	39100-VB001				
S-CARGO											
G20	E15S	AT	1500	198901	199011	NS-04	39100-13A00				
SERENA											
C23 4WD	SR20DE	MT/AT	2000	199106	199405	NS-19	39100-1C100				
C23 4WD	SR20DE	MT/AT	2000	199106	199405	NS-19	39211-65J00				
C23 4WD	SR20DE	MT/AT	2000	199106	199405	NS-19A42	39100-1C110				
C23 4WD	SR20DE	MT/AT	2000	199106	199405	NS-19A42	39211-1C100				
C23 4WD	CD20T	MT/AT	2000	199106	199405	NS-19	39100-1C100				
C23 4WD	CD20T	MT/AT	2000	199106	199405	NS-19	39211-65J00				
C23 4WD	CD20T	MT/AT	2000	199106	199405	NS-19A42	39100-1C110				
C23 4WD	CD20T	MT/AT	2000	199106	199405	NS-19A42	39211-1C100				
C23 4WD	SR20DE	MT/AT	2000	199405	199701	NS-19A42	39100-5C510				
C23 4WD	SR20DE	MT/AT	2000	199405	199701	NS-19A42	39211-5C510				
C23 4WD	CD20T	MT/AT	2000	199405	199701	NS-19A42	39100-5C510				
C23 4WD	SR20DE	MT/AT	2000	199701	199906	NS-19A42	39100-1C110				
C23 4WD	CD20T	MT/AT	2000	199701	199906	NS-19A42	39100-1C110				
C23 4WD	CD20ET	5MT	2000	199701	199906	NS-19	39100-1C100				
C23 4WD	CD20ET	5MT	2000	199701	199906	NS-19	39211-65J00				
C23 4WD	CD20ET	5MT	2000	199701	199906	NS-19A42	39100-1C110				
C24	SR20DE	CVT	2000	199906		NS-70A44	39100-5N410				
C24	SR20DE	CVT	2000	199906			39100-4N015				
C24	SR20DE	CVT	2000	199906			39100-4N075				
C24 4WD	SR20DE	CVT	2000	199906	200006		39100-4N215				
VC24	SR20DE	CVT/C	2000	199906		NS-70A44	39100-5N410				
VC24	SR20DE	CVT/C	2000	199906		NS-70A44	39100-4N075				
VC24 4WD	SR20DE	CVT/C	2000	199906		NS-65A44	39100-4N275				
VC24 4WD	SR20DE	CVT/C	2000	199906		NS-65A44	39100-4N275				
C24 4WD	SR20DE	CVT	2000	200006			39100-4N275				
BC24 4WD	QR20DE	4AT/C	2000	200112		NS-65A44	39100-CX215				
BC24 4WD	QR20DE	4AT/C	2000	200112		NS-65A44	39100-CX215				
VC24	QR20DE	CVT/C	2000	200112		NS-65A44	39100-CX016				
VC24	QR20DE	CVT/C	2000	200112		NS-65A44	39100-CX015				
C24	YD25DDTI	4AT	2500	199906	200006		39100-4N115				
C24	YD25DDTI	4AT	2500	199906	200006		39100-4N115				
C24 4WD	YD25DDTI	4AT	2500	199906	200006		39100-4N215				
BC24	YD25DDTI	4AT/C	2500	199906		NS-65A44	39100-4N175				
BC24	YD25DDTI	4AT/C	2500	199906		NS-65A44	39100-4N175				
BC24 4WD	YD25DDTI	4AT/C	2500	199906		NS-65A44	39100-4N275				
BC24 4WD	YD25DDTI	4AT/C	2500	199906		NS-65A44	39100-4N275				
C24	YD25DDTI	4AT	2500	200006			39100-4N175				
C24	YD25DDTI	4AT	2500	200006			39100-4N175				
C24 4WD	YD25DDTI	4AT	2500	200006			39100-4N275				
BC24	QR25DE	4AT/C	2500	200112		NS-65A44	39100-CX115				
BC24	QR25DE	4AT/C	2500	200112		NS-65A44	39100-CX115				
C25	MR20DE	CVT	2000	200505		NS-J31B	39211-CN000		39771-EN000		39771-EN000
C25 4WD	MR20DE	CVT	2000	200505		NS-J31B	39211-CN000		39771-EN100		39771-EN100
C25 4WD	MR20DE	CVT	2000	200505			39211-EN100	NSIU-XTR	39711-2U600	NSIU-XTR	39711-2U600
SKYLINE GT-R											
R32	RB26DETT	5MT	2600	198905	199501	NS-51A46	39100-23U00				
R32 4WD	RB26DETT	5MT	2600	198905	199501	NS-SKLRA46	39100-23U00				
R32	RB26DETT	5MT	2600	198905	199501	NS-51A46	39100-23U60				
R32 4WD	RB26DETT	5MT	2600	198905	199501	NS-SKLRA46	39100-23U60				
R33	RB26DETT	5MT	2600	199501	199901	NS-51A46	39100-23U00				
R33 4WD	RB26DETT	5MT	2600	199501	199901	NS-SKLRA46	39100-23U00				
R33	RB26DETT	5MT	2600	199501	199901	NS-51A46	39100-23U60				
R33 4WD	RB26DETT	5MT	2600	199501	199901	NS-SKLRA46	39100-23U60				
R34	RB26DETT	6MT	2600	199805	200208	NS-51A46	39100-23U00				
R34 4WD	RB26DETT	6MT	2600	199805	200208	NS-SKLRA46	39100-23U00				
R34	RB26DETT	6MT	2600	199805	200208	NS-51A46	39100-23U60				
R34 4WD	RB26DETT	6MT	2600	199805	200208	NS-SKLRA46	39100-23U60				
SKYLINE											
R32	RB20DET	5MT	2000	198905	199308	NS-51A46	39100-23U60				
R32 4WD	RB20DET	5MT	2000	198905	199308	NS-SKLRA46	39100-23U60				
R32	RB20DET	4MT	2000	198905	199308	NS-51A46	39100-23U00				
R32 4WD	RB20DET	4MT	2000	198905	199308	NS-SKLRA46	39100-23U00				
R32	RB20DET	4MT	2000	198905	199308	NS-51A46	39100-23U60				
R32 4WD	RB20DET	4MT	2000	198905	199308	NS-SKLRA46	39100-23U60				
R33	RB25DE	5MT	2500	199311	199805	NS-51A46	39100-23U00				
R33 4WD	RB25DE	5MT	2500	199311	199805	NS-SKLRA46	39100-23U00				
R33	RB25DE	5MT	2500	199311	199805	NS-51A46	39100-23U60				
R33 4WD	RB25DE	5MT	2500	199311	199805	NS-SKLRA46	39100-23U60				
R33	RB25DE	4MT	2500	199311	199805	NS-51A46	39100-23U00				
R33 4WD	RB25DE	4MT	2500	199311	199805	NS-SKLRA46	39100-23U00				
R33	RB25DE	4MT	2500	199311	199805	NS-51A46	39100-23U60				
R33 4WD	RB25DE	4MT	2500	199311	199805	NS-SKLRA46	39100-23U60				
R34	RB25DE	4AT	2500	199805	200106	NS-51A46	39100-23U00				

NISSAN

MODEL	ENGINE	AT/MT	CC	YEAR	YEAR	OUTER	O.E No.R	INNER R	O.E No.IR	INNER L	O.E No.IL
R34 4WD	RB25DE	4AT	2500	199805	200106	NS-SKLRA46	39100-23U00				
R34	RB25DE	4AT	2500	199805	200106	NS-51A46	39100-23U60				
R34 4WD	RB25DE	4AT	2500	199805	200106	NS-SKLRA46	39100-23U60				
R34	RB25DE	5MT	2500	199805	200106	NS-51A46	39100-23U00				
R34 4WD	RB25DE	5MT	2500	199805	200106	NS-SKLRA46	39100-23U00				
R34	RB25DE	5MT	2500	199805	200106	NS-51A46	39100-23U60				
R34 4WD	RB25DE	5MT	2500	199805	200106	NS-SKLRA46	39100-23U60				
V35 4WD	VQ25DD	5AT	2500	200109	200706		39211-AL860		39711-AR500	NSIU-Y11	39711-64E00
V36 4WD	VQ25HR	5AT	2500	200611			39211-EG000		39711-CG000	NSIU-Y11	39711-64E00
STAGEA											
WGNC34 4WD	RB25DE	4AT	2500	199609	200110	NS-51A46	39100-23U00				
WGNC34 4WD	RB25DET	4AT	2500	199609	200110	NS-51A46	39100-23U00				
M35 4WD	VQ25DD	5AT	2500	200109	200706		39211-AL860		39711-AR500	NSIU-Y11	39711-64E00
SUNNY/SENTRA											
B11	E13	MT/AT	1300	198110	198509	NS-49	39100-03A00				
B11	E13	MT/AT	1300	198110	198509	NS-49	39100-01M15				
B12	E13	MT/AT	1300	198509	199001	NS-07	39100-50A00				
B13	GA13DS	MT/AT	1300	199001	199401	NS-13	39100-51Y00				
B13	GA13DS	MT	1300	199001	199401	NS-13	39100-50Y00				
B14	GA13DE	AT	1300	199401	199810	NS-13	39100-0M005				
B14	GA13DE	MT	1300	199401	199810	NS-13	39100-0M000				
B15	QG13DE	5MT	1300	199810		NS-60	39100-4M400	NSIU-JP16	39711-02A05	NSIU-JP16	39711-02A05
B15	QG13DE	4AT	1300	199810		NS-60A42	39100-4M475	NSIU-JP16	39711-02A05	NSIU-JP16	39711-02A05
B15	QG13DE	4AT	1300	199810		NS-60	39100-4M465	NSIU-JP16	39711-02A05	NSIU-JP16	39711-02A05
B15	QG13DE	5MT	1300	199810		NS-60A42	39100-4M470	NSIU-JP16	39711-02A05	NSIU-JP16	39711-02A05
B15	QG13DE	5MT	1300	199810		NS-60	39100-4M460	NSIU-JP16	39711-02A05	NSIU-JP16	39711-02A05
B15	QG13DE	4AT	1300	199810		NS-60A42	39100-4M475				
B11	E15S	MT/AT	1500	198101	198601	NS-04	39100-11A00				
B11	E15S	MT/AT	1500	198101	198601	NS-04	39100-11A00				
B11	E15S	MT/AT	1500	198101	198601	NS-04	39100-12A00				
B11	E15S	MT/AT	1500	198101	198601	NS-04	39100-13A00				
B11	E15S	MT/AT	1500	198101	198601	NS-04	39100-13A01				
B11	E15	MT/AT	1500	198110	198509	NS-04	39100-13A00				
B11	E15	MT/AT	1500	198110	198509	NS-04	39100-11M05				
B11	E15	MT/AT	1500	198209	198509	NS-22	39100-15A05				
B12	E15S E	MT/AT	1500	198509	198709	NS-07	39100-50A00				
B12	E15S E	MT/AT	1500	198509	198801	NS-11	39100-60A10				
B12	E15T	MT	1500	198509	198709	NS-11	39100-60A00				
B12 4WD	E15S	MT/AT	1500	198509	198709	NS-11	39100-51 M00				
B12 4WD	E15S	MT/AT	1500	198509	198709	NS-11	39100-70A00				
B12	E15T	AT	1500	198509	199709	NS-11	39100-60A10				
B12	GA15SE	4AT	1500	198701	198905	NS-07	39100-52A00				
B12	GA15SE	MT/AT	1500	198709	199001	NS-07	39100-50A00				
B12 4WD	GA15SE	MT/AT	1500	198709	199001	NS-19	39100-70A10				
B12 4WD	GA15SE	MT/AT	1500	198709	199001	NS-19	39100-70A20				
B12	GA15SE	4AT	1500	198901	199001	NS-07	39100-77A00				
B13	GA15DS	AT	1500	199001	199401	NS-13	39100-51Y00				
B13	GA15DS	AT	1500	199001	199401	NS-13A42	39100-51Y10				
B13	GA15DS	MT	1500	199001	199401	NS-13	39100-50Y00				
B13 4WD	GA15DS	AT	1500	199001	199401	NS-17	39100-62Y05				
B13	GA15DS	MT/AT	1500	199001	199401	NS-13A42	39100-50Y10				
B13	GA15DS	MT/AT	1500	199001	199401	NS-13A42	39100-51Y10				
B13	GA15DS	MT/AT	1500	199001	199401	NS-13A42	39100-52Y00				
B13	GA15DS	MT/AT	1500	199001	199401	NS-13A42	39100-52Y10				
B13	GA15DS	MT/AT	1500	199001	199401	NS-13A42	39100-53Y00				
B13	GA15DS	MT/AT	1500	199001	199401	NS-13A42	39100-53Y10				
B13 4WD	GA15DS	MT/AT	1500	199001	199401	NS-17	39100-62Y00				
B13 4WD	GA15DS	MT/AT	1500	199001	199401	NS-17	39100-62Y05				
B13 4WD	GA15DS	MT/AT	1500	199001	199401	NS-17A42	39100-62Y15				
B13 4WD	GA15DS	MT/AT	1500	199001	199401	NS-17A42	39100-63Y10				
B13 4WD	GA15DS	MT/AT	1500	199001	199401	NS-17A42	39100-62Y15				
B13 4WD	GA15DS	MT/AT	1500	199001	199401	NS-17A42	39100-63Y10				
B14	GA15DE	AT	1500	199401	199810	NS-13	39100-0M005				
B14	GA15DE	AT	1500	199401	199810	NS-13A42	39100-0M015				
B14	GA15DE	MT	1500	199401	199810	NS-13	39100-0M000				
B14	GA15DE	MT	1500	199401	199810	NS-13A42	39100-0M010				
B14	GA15DE	AT	1500	199401	199810	NS-17	39100-62Y05				
B14 4WD	GA15DE	AT	1500	199401	199810	NS-17A42	39100-62Y15				
B14 4WD	GA15DE	MT	1500	199401	199810	NS-17	39100-62Y05				
B14 4WD	GA15DE	MT	1500	199401	199810	NS-17A42	39100-62Y15				
B14 4WD	GA15DE	AT	1500	199401	199810	NS-17	39100-62Y05				
B15	QG15DE	4AT	1500	199810		NS-60A42	39100-4M475				
B15	QG15DE	4AT	1500	199810		NS-60	39100-4M465				
B15	QG15DE	5MT	1500	199810		NS-60A42	39100-4M470	NSIU-JP16	39711-02A05	NSIU-JP16	39711-02A05
B15	QG15DE	5MT	1500	199810		NS-60	39100-4M460	NSIU-JP16	39711-02A05	NSIU-JP16	39711-02A05
B15	QG15DELEV	4AT	1500	199810		NS-60A42	39100-4M475				
B15	QG15DELEV	4AT	1500	199810		NS-60	39100-4M465				
B15	QG15DELEV	5MT	1500	199810		NS-60A42	39100-4M470	NSIU-JP16	39711-02A05	NSIU-JP16	39711-02A05
B15	QG15DELEV	5MT	1500	199810		NS-60	39100-4M460	NSIU-JP16	39711-02A05	NSIU-JP16	39711-02A05
B15 4WD	QG15DE	4AT	1500	199810		NS-61A42	39100-4M570	NSIU-Y11	39711-64E00		
B15 4WD	QG15DE	4AT	1500	199810		NS-61	39100-4M560	NSIU-Y11	39711-64E00		
B15 4WD	QG15DE	5MT	1500	199810	199907	NS-61A42	39100-4M570	NSIU-Y11	39711-64E00		

NISSAN

MODEL	ENGINE	AT/MT	CC	YEAR	YEAR	OUTER	O.E No.R	INNER R	O.E No.IR	INNER L	O.E No.IL
B15 4WD	QG15DE	5MT	1500	199810	199907	NS-61	39100-4M560	NSIU-Y11	39711-64E00		
B15 4WD	QG15DE	5MT	1500	199907		NS-61A42	39100-4M570	NSIU-Y11	39711-64E00		
B15 4WD	QG15DE	5MT	1500	199907		NS-61	39100-4M560	NSIU-Y11	39711-64E00		
EB12	CA16D	MT/AT	1600	198601	199001	NS-11	39100-65A00				
EB11	E16S	MT/AT	1600	198601	198901	NS-12	39100-A03G0				
EB12	CA16D	AT	1600	198608	199001	NS-11	39100-65A10				
EB13	GA16DE	MT/AT	1600	199001	199401	NS-17	39100-60Y00				
EB13	GA16DE	MT/AT	1600	199001	199401	NS-17	39100-60Y05				
EB13	GA16DE	MT/AT	1600	199001	199401	NS-17A42	39100-60Y10				
EB13	GA16DE	MT/AT	1600	199001	199401	NS-17A42	39100-60Y15				
EB14	GA16DE	AT	1600	199401	199810	NS-17	39100-0M605				
EB14	GA16DE	AT	1600	199401	199810	NS-55A42	39100-0M316				
EB14	GA16DE	MT	1600	199401	199810	NS-17	39100-0M600				
EB14	GA16DE	MT	1600	199401	199810	NS-17A42	39100-0M311				
JB15	SR16VE	5MT	1600	199810		NS-62A42	39100-6M010				
B15	SR16VE	5MT	1600	199810	200009	NS-62A42	39100-6M010				
SB11	CD17	MT	1700	198201	198509	NS-04	39100-13A10				
SB11	CD17	MT	1700	198201	198501	NS-04	39100-11A10				
SB11	CD17	MT	1700	198201	198501	NS-04	39100-12A10				
SB11	CD17	AT	1700	198201	198501	NS-04	39100-11A20				
SB11	CD17	AT	1700	198201	198501	NS-04	39100-12A20				
SB11	CD17	AT	1700	198210	198509	NS-04	39100-13A20				
SB12	CD17	MT	1700	198501	199001	NS-07	39100-50A10				
SB12	CD17	AT	1700	198509	199001		39100-50A20				
SB13	CD17	AT	1700	199001	199401	NS-13A42	39100-53Y00				
SB13	CD17	AT	1700	199001	199401	NS-13A42	39100-53Y10				
SB13	CD17	MT	1700	199001	199401	NS-13A42	39100-52Y00				
SB13	CD17	MT	1700	199001	199401	NS-13A42	39100-52Y10				
SNB13 4WD	CD17	MT/AT	1700	199001	199401	NS-17	39100-62Y00				
B13 4WD	SR18DE	AT	1800	199001	199401	NS-17	39100-63Y00				
B13 4WD	SR18DE	AT	1800	199001	199401	NS-17A42	39100-63Y10				
B13 4WD	SR18DE	MT	1800	199001	199401	NS-17	39100-63Y00				
B13 4WD	SR18DE	MT	1800	199001	199401	NS-17A42	39100-63Y10				
B13	SR18DE	MT/AT	1800	199001	199401	NS-20	39100-64Y00				
B13	SR18DE	MT/AT	1800	199001	199401	NS-20	39100-64Y05				
B13	SR18DE	MT/AT	1800	199001	199401	NS-20	39100-64Y10				
B13	SR18DE	MT/AT	1800	199001	199401	NS-20	39100-64Y15				
B14	SR18DE	AT	1800	199401	199810	NS-55	39100-0M806				
B14	SR18DE	AT	1800	199401	199810	NS-55A42	39100-0M816				
B14	SR18DE	MT	1800	199401	199810	NS-55	39100-0M801				
B14	SR18DE	MT	1800	199401	199810	NS-55A42	39100-0M811				
B15	QG18DD	CVT	1800	199810	200009	NS-62A42	39100-5M810				
SB14	CD20	AT	2000	199401	199810	NS-17	39100-0M905				
SB14	CD20	AT	2000	199401	199810	NS-17A42	39100-0M915				
SB14	CD20	MT	2000	199401	199810	NS-17	39100-0M900				
SB14	CD20	MT	2000	199401	199810	NS-17A42	39100-0M910				
SNB14 4WD	CD20	MT/AT	2000	199401	199810	NS-17	39100-63Y00				
SNB14 4WD	CD20	MT/AT	2000	199401	199810	NS-17A42	39100-63Y10				
B15	YD22DD	4AT	2200	199909	200205	NS-62A42	39100-WD215				
B15	YD22DD	4AT	2200	199909	200205	NS-62	39100-WD205				
B15	YD22DD	5MT	2200	199909	200205	NS-62A42	39100-WD210				
B15	YD22DD	5MT	2200	199909	200205	NS-62	39100-WD200				
TEANA											
J31	QR20DE	AT	2000	200604	200802	NS-J31B	39211-CN000				
J31 JPN MAKE	VQ23DE	AT	2300	200302		NS-J31B	39211-CN000		39771-9Y015	NSID-5001	39711-87E00
J31	VQ23DE	AT	2300	200604	200802	NS-J31B	39211-9Y015		39771-9Y015	NSID-5001	39711-87E00
J31	VQ35DE	CVT	3500	200604	200802	NS-J31C	39211-9Y300		39771-9Y115		39711-9Y115
J31 4WD	QR25DE	AT	2500	200302			39211-CA000	NSIU-XTR	39711-2U600	NSIU-XTR	39711-2U600
TERRANO 2/MISTRAL											
R20	KA24E	MT/AT	2400	1993/02	1996/05	NS-200	39211-0F000	NSIU-5031	39711-0F000	NSIU-5031	39711-0F000
R20	KA24E	MT/AT	2400	2002/01	2004/02	NS-200	39211-0F000	NSIU-5031	39711-0F000	NSIU-5031	39711-0F000
R20	KA24E	MT/AT	2400	2004/02		NS-200	39211-0F000	NSIU-5031	39711-0F000	NSIU-5031	39711-0F000
R20	KA24E	MT/AT	2400	1996/05	2002/02	NS-200	39211-0F000	NSIU-5031	39711-0F000	NSIU-5031	39711-0F000
R20	TD27T	MT/AT	2700	1993/02	1996/05	NS-200	39211-0F000	NSIU-5031	39711-0F000	NSIU-5031	39711-0F000
R20	TD27T	MT/AT	2700	1996/07	2002/02	NS-200	39211-0F000	NSIU-5031	39711-0F000	NSIU-5031	39711-0F000
R20	TD27T	MT/AT	2700	2002/02	2004/02	NS-200	39211-0F000	NSIU-5031	39711-0F000	NSIU-5031	39711-0F000
R20	TD27TI	MT/AT	2700	1996/05	1999/10	NS-200	39211-0F000	NSIU-5031	39711-0F000	NSIU-5031	39711-0F000
R20	TD27TI	MT/AT	2700	1999/10	2002/02	NS-200	39211-0F000	NSIU-5031	39711-0F000	NSIU-5031	39711-0F000
R20	TD27TI	MT/AT	2700	2002/02	2004/02	NS-200	39211-0F000	NSIU-5031	39711-0F000	NSIU-5031	39711-0F000
R20	TD27TI	MT/AT	2700	2004/02		NS-200	39211-0F000	NSIU-5031	39711-0F000	NSIU-5031	39711-0F000
R20	TD27T	AT	2700	199406	199610	NS-25	39100-78G00				
TERRANO/PATHFINDER											

NISSAN

MODEL	ENGINE	AT/MT	CC	YEAR	YEAR	OUTER	O.E No.R	INNER R	O.E No.IR	INNER L	O.E No.IL
D21 4WD	TD27E	MT/AT	2700	198601	198901	NS-24	39100-31G00	NSIU-5033	39741-31G25	NSIU-5033	39741-31G25
BYD21 4WD	TD27T	MT/AT	2700	198608	198910	NS-24	39100-31G00	NSIU-TER	39711-35F10	NSIU-TER	39711-35F10
D21 4WD	TD27T	MT/AT	2700	198910		NS-25	39100-78G00	NSIU-TER	39711-35F10	NSIU-TER	39711-35F10
R50	TD27ETI	MT/AT	2700	199509	199902	NS-201	39100-58G00				
R50 4WD	TD27ETI	MT/AT	2700	199509	199902	NS-201	39100-58G00				
D21 4WD	VG30E	MT/AT	3000	198710	198910	NS-24	39100-31G00	NSIU-5033	39741-31G25	NSIU-5033	39741-31G25
D21 4WD	VG30E	MT/AT	3000	198910		NS-201	39100-88G00	NSIU-5033	39741-31G25	NSIU-5033	39741-31G25
R50	VG33E	4AT	3300	199509	200208	NS-201	39100-58G00	NSIU-TER	39711-35F10	NSIU-TER	39711-35F10
R50 4WD	VG33E	4AT	3300	199509	200208	NS-201	39100-58G00	NSIU-TER	39711-35F10	NSIU-TER	39711-35F10
R51 4WD	YD25DDTi	MT/AT	2500	200501	200609	NS-P31	C9211-EB30A	NSIU-R51	39741-7Y028	NSIU-R51	39741-7Y028
R51 4WD	YD25DDTi	MT/AT	2500	200609	200705	NS-P32	C9211-EB31A	NSIU-R51	39741-7Y029	NSIU-R51	39741-7Y029
R51 4WD	YD25DDTi	MT/AT	2500	200705		NS-P31	C9211-EB30A	NSIU-R51	39741-7Y028	NSIU-R51	39741-7Y028
R51 4WD	VQ40DE	AT	4000	200501	200609	NS-P31	C9211-EB30A	NSIU-R51	39741-7Y028	NSIU-R51	39741-7Y028
R51 4WD	VQ40DE	AT	4000	200609	200705	NS-P32	C9211-EB31A	NSIU-R51	39741-7Y029	NSIU-R51	39741-7Y029
R51 4WD	VQ40DE	AT	4000	200705		NS-P31	C9211-EB30A	NSIU-R51	39741-7Y028	NSIU-R51	39741-7Y028
TERRANO REGULUS											
R50	QD32ETI	4AT	3000	199608	199902	NS-201	39100-58G00				
R50 4WD	ZD30DD	4AT	3000	199902	200208	NS-201	39100-58G00				
R50	VG33E	4AT	3300	199608	200208	NS-201	39100-58G00	NSIU-TER	39711-35F10	NSIU-TER	39711-35F10
TIIDA											
C11X	HR16DE	MT	1600	200702		NS-TD2	C9211-EL10A		C9720-EL10A		39720-ET027
C11X	HR16DE	AT	1600	200703	200706	NS-TD2	C9211-EL10A		C9720-EL11A	NSIU-C11X	39720-ET028
C11X	HR16DE	AT	1600	200702		NS-TD2	C9211-EL10A	NSIU-C11X	39720-ET028	NSIU-C11X	39720-ET028
C11X	MR18DE	AT/MT	1800			NS-TD1	C9211-EL10B		39720-EW627		39720-EW628
TINO											
V10	QG18DE	4AT	1800	199812	200303	NS-TN-A44	39100-4U016	NSIP-TN	39711-6J000	NSID-TN	39711-64J01
V10	QG18DE	4AT	1800	199812	200303	NS-TN-A44	39100-4U015	NSIP-TN	39711-6J000	NSID-TN	39711-64J01
V10	QG18DE	4AT	1800	199812	200303	NS-TN-A44	39100-4U075	NSIP-TN	39711-6J000	NSID-TN	39711-64J01
HV10	SR20DE	CVT	2000	199812			39100-5U016				
HV10	SR20DE	CVT	2000	199812			39100-5U076				
HV10	SR20DE	CVT	2000	199812			39100-5U015				
HV10	SR20DE	CVT	2000	199812			39100-5U075				
VANETTE											
SE88 SS88	F8	MT	1800	199404			39100-HC400				
C22 4WD	LD20	MT	2000	198809	199403	NS-19	39100-G8100				
C22 4WD	CA20	MT/AT	2000	198809	199404	NS-19	39100-G8100				
C22 4WD	CA20	MT/AT	2000	198809	199404	NS-19	39211-61E06				
C22 4WD	LD20T	MT/AT	2000	198809	199404	NS-19	39100-G8100				
C22 4WD	LD20T	MT/AT	2000	198809	199404	NS-19	39211-61E06				
C22 4WD	Z20	MT	2000	198811	199008	NS-19	39100-G8100				
C22 4WD	Z20	5MT	2000	198811	199008	NS-19	39211-61E06				
C22 4WD	LD20	5MT	2000	198811	199404	NS-19	39211-61E06				
C22 4WD	NA20	MT	2000	199008	199403	NS-19	39100-G8100				
C22 4WD	NA20	5MT	2000	199008	199404	NS-19	39211-61E06				
SE28 SS28	R2	MT	2200	199404			39100-HC400				
WINGROAD											
WFY10	GA15DE	5MT	1500	199605	199906	NS-13A42	39100-50Y10				
WFY10	GA15DE	5MT	1500	199605	199906	NS-13	39100-50Y00				
WFY10	GA15DE	4AT	1500	199605	199906	NS-17A42	39100-60Y15				
WFY10	GA15DE	4AT	1500	199605	199906	NS-17	39100-60Y05				
WFNY10 4WD	GA15DE	5MT	1500	199605	199906	NS-17A42	39100-62Y15	NSIU-Y11	39711-64E00		
WFNY10 4WD	GA15DE	5MT	1500	199605	199906	NS-17	39100-62Y05	NSIU-Y11	39711-64E00		
WFNY10 4WD	GA15DE	4AT	1500	199605	199906	NS-17A42	39100-62Y15	NSIU-Y11	39711-64E00		
WFNY10 4WD	GA15DE	4AT	1500	199605	199906	NS-17	39100-62Y05	NSIU-Y11	39711-64E00		
WHY10	SR18DE	MT/AT	1800	199605	199906		39100-4H215				
WHY10	SR18DE	MT/AT	1800	199605	199906		39100-4H205				
WHNY10 4WD	SR18DE	4AT	1800	199605	199609	NS-17A42	39100-63Y10			NSIU-Y11	39711-64E00
WHNY10 4WD	SR18DE	4AT	1800	199605	199609	NS-17A42	39100-63Y10			NSIU-Y11	39711-64E00
WHNY10 4WD	SR18DE	4AT	1800	199610	199906	NS-17A42	39100-63Y10			NSIU-Y11	39711-64E00
WHNY10 4WD	SR18DE	4AT	1800	199610	199906	NS-17	39100-63Y00			NSIU-Y11	39711-64E00
WEY10	CD20	5MT	2000	199605	199906	NS-13	39100-79R10				
WEY10	CD20	5MT	2000	199605	199906		39100-79R00				
WEY10	CD20	4AT	2000	199605	199906		39100-79R16				
WEY10	CD20	4AT	2000	199605	199906	NS-13A42	39100-53Y10				
WEY10	CD20	4AT	2000	199605	199906	NS-20	39100-79R06				
WEY10	CD20	4AT	2000	199605	199906	NS-13A42	39100-53Y00				
X-TRAIL											
NT30 4WD	QR20DE	4AT	2000	200010	200703	NS-69A44	39100-8H515	NSIR-XT	39100-8H615	NSIL-XT	39101-8H315
NT30 4WD	QR20DE	5MT	2000	200010	200703	NS-69A44	39100-8H515	NSIR-XT	39100-8H710	NSIL-XT	39101-8H710
T30 2WD	QR20DE	AT/MT	2000	200010	200703	NS-69A44	39100-8H515	NSIR-XT	39100-8H310	NSIL-XT	39101-8H710
NT30 4WD	QR20DE	4AT	2000	200010	200703	NS-69A44	39100-8H315	NSIR-XT	39100-8H615	NSIL-XT	39101-8H315
NT30 4WD	QR20DE	4AT	2000	200010	200703	NS-69A44	39211-2Y070	NSIR-XT	39100-8H615	NSIL-XT	39101-8H315

NISSAN

MODEL	ENGINE	AT/MT	CC	YEAR	YEAR	OUTER	O.E No.R	INNER R	O.E No.IR	INNER L	O.E No.IL
NT30 4WD	QR20VET	4AT	2000	200010	200703	NS-69A44	39100-8H615	NSIR-XT	39100-8H615	NSIL-XT	39101-8H315
NT30 4WD	SR20VET	4AT	2000	200010	200703	NS-69A44	39211-2Y070	NSIR-XT	39100-8H615	NSIL-XT	39101-8H315
NT30 4WD	YD22ETi	4AT	2200	200010	200703	NS-69A44	39211-2Y070	NSIR-XT	39100-8H712	NSIL-XT	39101-8H710
NT30 4WD	QR25DE	4AT	2500	200010	200703	NS-69A44	39211-2Y070	NSIR-XT	39100-8H615	NSIL-XT	39101-8H315
NT30 4WD	QR25DE	MT	2500	200010	200703	NS-69A44	39211-2Y070	NSIR-XT	39100-9H610	NSIL-XT	39101-8H710
NT30 4WD	QR20DE	MT/AT	2000	200010	200703	NS-XRA44	39211-8H510	NSIU-XTR	39711-2U600	NSIU-XTR	39711-2U600
NT30 4WD	QR20VET	MT/AT	2000	200010	200703	NS-XRA44	39211-8H510	NSIU-XTR	39711-2U600	NSIU-XTR	39711-2U600
NT30 4WD	SR20VET	MT/AT	2000	200010	200703	NS-XRA44	39211-8H510	NSIU-XTR	39711-2U600	NSIU-XTR	39711-2U600
NT30 4WD	YD22ETi	MT/AT	2200	200010	200703	NS-XRA44	39211-8H510	NSIU-XTR	39711-2U600	NSIU-XTR	39711-2U600
NT30 4WD	QR25DE	MT/AT	2500	200010	200703	NS-XRA44	39211-8H510	NSIU-XTR	39711-2U600	NSIU-XTR	39711-2U600
T31 4WD	MR20DE	MT/CVT	2000	200703			39211-EN100	NSIU-XTR	39711-2U600	NSIU-XTR	39711-2U600
T31 4WD	QR25DE	MT/CVT	2500	200703			39211-EN100	NSIU-XTR	39711-2U600	NSIU-XTR	39711-2U600
T31 4WD	M9R	AT/MT	2000	200703			39211-EN100	NSIU-XTR	39711-2U600	NSIU-XTR	39711-2U600

OPEL

MODEL	ENGINE	AT/MT	CC	YEAR	YEAR	OUTER	O.E No.R	INNER R	O.E No.IR	INNER L	O.E No.IL
ANTARA											
	Z20DM	AT	2000	200703		OP-ANT	48 04 592		48 04 589		48 04 588
	Z20DM	MT	2000	200703		OP-ANT	48 04 592		48 04 589		48 04 590
	Z20DMH	AT	2000	200605		OP-ANT	48 04 592		48 04 589		48 04 588
	Z20DMH	MT	2000	200605		OP-ANT	48 04 592		48 04 589		48 04 590
	Z24XE	AT	2400	200605		OP-ANT	48 04 592		48 04 589		48 04 588
	Z32SE	AT	3200	200605		OP-ANT	48 04 592		48 04 589		48 04 588
ASCONA C											
	1.3L	MT	1300	198108	198810	OP-1007	0374066	OPIU-5002	0374027	OPIU-5002	0374027
	1.6L	MT	1600	198108	198810	OP-1007	0374066	OPIU-5002	0374027	OPIU-5002	0374027
	2.0L	MT	2000	198208	198810	OP-1051	0374061	OPIU-5002	0374027	OPIU-5002	0374027
	1,6D	MT	1600	198106	198806	OP-1008	90125875	OPIU-5003	0374195	OPIU-5003	0374195
	1,6 S	MT	1600	198106	198606	OP-1008	90125875	OPIU-5003	0374195	OPIU-5003	0374195
	1,8I,E	MT	1800	198206	198806	OP-1008	90125875	OPIU-5003	0374195	OPIU-5003	0374195
	2,0 GT	MT	2000	198206	198806	OP-1008	90125875	OPIU-5003	0374195	OPIU-5003	0374195
ASTRA F											
	14NV	AT/MT	1400	199108	199809	OP-68	0374092	OPIU-5001	0374091	OPIU-5001	0374091
	14SE	AT/MT	1400	199108	199809	OP-68	0374092	OPIU-5001	0374091	OPIU-5001	0374091
	C14NZ	AT/MT	1400	199108	199809	OP-68	0374092	OPIU-5001	0374091	OPIU-5001	0374091
	C14SE	AT/MT	1400	199108	199809	OP-68	0374092	OPIU-5001	0374091	OPIU-5001	0374091
	16NZR	AT/MT	1600	199108	199809	OP-68	0374092	OPIU-5001	0374091	OPIU-5001	0374091
	C16NZ	AT/MT	1600	199108	199809	OP-68	0374092	OPIU-5001	0374091	OPIU-5001	0374091
	C16SE	AT/MT	1600	199108	199809	OP-68	0374092	OPIU-5001	0374091	OPIU-5001	0374091
	X16SZ	AT/MT	1600	199108	199809	OP-68	0374092	OPIU-5001	0374091	OPIU-5001	0374091
	X16SZR	AT/MT	1600	199108	199809	OP-68	0374092	OPIU-5001	0374091	OPIU-5001	0374091
	1.4L	MT	1400	199108	199809	OP-3126A29	0374175	OPIU-5002	0374027	OPIU-5002	0374027
	1.4L	MT	1400	199401	199809	OP-1118	0374263	OPIU-5002	0374027	OPIU-5002	0374027
	1.6L	AT/MT	1600	199108	199809	OP-3126A29	0374175	OPIU-5002	0374027	OPIU-5002	0374027
	1.6L	AT/MT	1600	199401	199809	OP-1118	0374263	OPIU-5002	0374027	OPIU-5002	0374027
	1.7L D	AT/MT	1700	199108	199809	OP-1051A29	0374176	OPIU-5002	0374027	OPIU-5002	0374027
	1.7L D	AT/MT	1700	199401	199809	OP-1118	0374263	OPIU-5002	0374027	OPIU-5002	0374027
	1.7L TDS	AT/MT	1700	199108	199809	OP-1051A29	0374176	OPIU-5003	0374195	OPIU-5003	0374195
	1.8L	AT/MT	1800	199108	199809	OP-1051A29	0374176	OPIU-5003	0374195	OPIU-5003	0374195
	2.0L	AT/MT	2000	199108	199809	OP-1051A29	0374176	OPIU-5003	0374195	OPIU-5003	0374195
	2.0L	AT/MT	2000	199108	199809	OP-1051A29	0374176	OPIU-5003	0374195	OPIU-5003	0374195
ASTRA G											
	1.2L	AT/MT	1200	199809		OP-75313S	0374346				
	1.4L	AT/MT	1400	199809		OP-75311S	0374002				
	1.6L	AT/MT	1600	199809		OP-75311S	0374002				
	1.7L TD	AT/MT	1700	199809		OP-75311S	0374002				
	1.8L	AT/MT	1800	199809		OP-1051	0374003				
	2.0L	AT/MT	2000	199809		OP-1051	0374003				
	2.0L	AT/MT	2000	199809		OP-1051	0374003				
ASTRA H											
	1.2L	AT/MT	1200	200401		OP-504	1 603 273				
	1.4L	AT/MT	1400	200401		OP-504	1 603 273				
	1.6L	AT/MT	1600	200401		OP-504	1 603 273				
CALIBRA A											
	2.0LI	MT	2000	198909	199107	OP-1052A43	0374126	OPIU-5003	0374195	OPIU-5003	0374195
	2.0LI	MT	2000	199108	199402	OP-1051A29	0374176	OPIU-5003	0374195	OPIU-5003	0374195
	2.0LI	AT/MT	2000	198909	199107	OP-1052A43	0374126	OPIU-5003	0374195	OPIU-5003	0374195
	2.0LI	AT/MT	2000	199108	199707	OP-1051A29	0374176	OPIU-5003	0374195	OPIU-5003	0374195
	2.0L T	MT	2000	199108	199707	OP-1051A29	0374176	OPIU-5003	0374195	OPIU-5003	0374195
	2.0LI	MT	2000	198909	199107	OP-1052A43	0374126	OPIU-5003	0374195	OPIU-5003	0374195
	2.0LI	MT	2000	199108	199707	OP-1051A29	0374176	OPIU-5003	0374195	OPIU-5003	0374195
COMBO											
	1.2L	MT	1200	199407	200110	OP-1116					
	1.4L	MT	1400	199407	200110	OP-1116					
	1.7D	MT	1700	199407	200110	OP-1116					
CORSA A											
	1.0L	MT	1000	198209	199312	OP-68	0374092	OPIU-5001	0374091	OPIU-5001	0374091
	1.2L	MT	1200	198209	199312	OP-68	0374092	OPIU-5001	0374091	OPIU-5001	0374091
	1.3L	MT	1300	198209	199312	OP-68	0374092	OPIU-5001	0374091	OPIU-5001	0374091
	1.4L	MT	1400	199001	199312	OP-68	0374092	OPIU-5001	0374091	OPIU-5001	0374091
	1.5L D	MT	1500	198709	199312	OP-68	0374092	OPIU-5001	0374091	OPIU-5001	0374091
	1.5L TD	MT	1500	198709	199312	OP-1007	901571131	OPIU-5002	0374027	OPIU-5002	0374027
	1.6L	MT	1600	198707	199312	OP-1007	901571131	OPIU-5002	0374027	OPIU-5002	0374027
CORSA B											
	1.2I	MT	1200	199303	200009	OP-3359A29	0374218				
	1.2I	MT	1200	199303	200009	OP-3359A29	0374218				
	1.4L	MT	1400	199303	200009	OP-3359A29	0374218				
	1.6L	MT	1600	199303	200009	OP-1118	0374263	OPIU-5002	0374027	OPIU-5002	0374027
	1.6L	MT	1600	199303	200009	OP-1118	0374263	OPIU-5002	0374027	OPIU-5002	0374027
	1.7L TD	MT	1700	199303	200009	OP-3359A29	0374218				
KADETT E											
	1.2L	MT	1200	198409	199302	OP-1007	901571131	OPIU-5002	0374027	OPIU-5002	0374027
	1.2L	MT	1200	198409	199302	OP-3126A29	0374175	OPIU-5002	0374027	OPIU-5002	0374027
	1.3L	MT	1300	198409	199302	OP-1007	901571131	OPIU-5002	0374027	OPIU-5002	0374027
	1.3L	MT	1300	198409	199302	OP-3126A29	0374175	OPIU-5002	0374027	OPIU-5002	0374027
	1.4L	MT	1400	199001	199302	OP-1007	901571131	OPIU-5002	0374027	OPIU-5002	0374027

OPEL

MODEL	ENGINE	AT/MT	CC	YEAR	YEAR	OUTER	O.E No.R	INNER R	O.E No.IR	INNER L	O.E No.IL
	1.4L	MT	1400	199001	199302	OP-3126A29	0374175	OPIU-5002	0374027	OPIU-5002	0374027
	1.6L	MT	1600	198409	199112	OP-1007	901571131				
	1.6L	MT	1600	198409	199112	OP-3126A29	0374175				
	1.6LS	MT	1600	198408	199112	OP-1051	0374061	OPIU-5003	0374195	OPIU-5003	0374195
	1.8L	MT	1800	198408	199112	OP-1051	0374061				
	1.8L	MT	1800	198408	199112	OP-1051A29	0374176	OPIU-5003	0374195	OPIU-5003	0374195
	1.8L	MT	1800	198408	199112	OP-1052A43	0374126	OPIU-5003	0374195	OPIU-5003	0374195
	2.0L	MT	2000	198408	199112	OP-1051	0374061	OPIU-5003	0374195	OPIU-5003	0374195
	2.0L	MT	2000	198408	199112	OP-1051A29	0374176	OPIU-5003	0374195	OPIU-5003	0374195
	2.0L	MT	2000	198408	199112	OP-1052A43	0374126	OPIU-5003	0374195	OPIU-5003	0374195
	2.0L	MT	2000	198408	199112	OP-1051	0374061				
	2.0L	MT	2000	198408	199112	OP-1051A29	0374176	OPIU-5003	0374195	OPIU-5003	0374195
	2.0L	MT	2000	198408	199112	OP-1052A43	0374126	OPIU-5003	0374195	OPIU-5003	0374195
FRONTERA/MONTEREY											
UBS13	G200Z	MT	2000	198101	198401	ISZ-01	8-94173-304-2/13				
UBS13	G200	MT	2000	198401	198501	ISZ-01	8-94259-812-0				
UBS12	4ZC1	MT/HMM	2000	198501	198801	ISZ-01	8-94247-650-0				
UBS12	4ZC1	MT	2000	198701	198801	ISZ-05	8-94426-401-3	ISIR-1004	8-94312-676-0	ISIL-1004	8-94313-103-0
UBS52	C223	MT	2300	198101	198601	ISZ-01	8-94124-628-0				
UBS52	C223	MT	2300	198101	198701	ISZ-01	8-94124-628-0				
UBS52	C223-T	MT	2300	198701	198801	ISZ-05	8-94423-037-1	ISIR-1004	8-94312-676-0	ISIL-1004	8-94313-103-0
UBS52	C223	MT	2300	198701	198801	ISZ-05	8-94423-037-1	ISIR-1004	8-94312-676-0	ISIL-1004	8-94313-103-0
UBS52	C223	MT	2300	198809	198912	ISZ-04	8-94173-304-3	ISIR-1004	8-94312-676-0	ISIL-1004	8-94313-103-0
UBS52	C223-T	MT	2300	198909	198912	ISZ-04	8-94173-304-3	ISIR-1004	8-94312-676-0	ISIL-1004	8-94313-103-0
UBS17	4ZE1	MT	2600	198701	199112	ISZ-05	8-94426-401-3	ISIR-1004	8-94312-676-0	ISIL-1004	8-94313-103-0
UBS17	4ZE1	AT	2600	198801	198901	ISZ-04	8-94173-304-3	ISIR-1004	8-94312-676-0	ISIL-1004	8-94313-103-0
UBS17	4ZE1	4AT	2600	198811	199112		8-97120-778-0				
UBS16	4ZD1	MT	2800	198601		ISZ-01	8-94259-812-0				
UBS16	4ZD1	MT	2800	198701		ISZ-05	8-94426-401-3	ISIR-1004	8-94312-676-0	ISIL-1004	8-94313-103-0
UBS55	4JB1	MT	2800	198701	199112	ISZ-04	8-94173-304-3	ISIR-1004	8-94312-676-0	ISIL-1004	8-94313-103-0
UBS55	4BD1-T	MT	2800	198701	199112	ISZ-04	8-94173-304-3	ISIR-1004	8-94312-676-0	ISIL-1004	8-94313-103-0
UBS55	4JB1-T	MT	2800	198701	199112	ISZ-04	8-94173-304-3	ISIR-1004	8-94312-676-0	ISIL-1004	8-94313-103-0
UBS55	4ZB1	MT	2800	198701	199112	ISZ-05	8-94426-401-3	ISIR-1004	8-94312-676-0	ISIL-1004	8-94313-103-0
UBS55	4JB1 TBO	MT/AT	2800	198710	199112		8-97120-778-0				
UBS73	4JX1	MT/AT	3000	199805	200106	ISZ-06	8-97183-948-0				
UBS73	4JX1	MT/AT	3000	199805	200106	ISZ-06	8-97183-946-0				
UBS73	4JX1	MT/AT	3000	199805	200106	ISZ-06	8-97200-101-0				
UBS73	4JX1	MT/AT	3000	199805	200106	ISZ-06	8-97200-102-0				
UBS69	4JG2 TBO	MT/AT	3100	199112	199301	ISZ-04	8-94374-779-1	ISIR-1004	8-94312-676-0	ISIL-1004	8-94313-103-0
UBS69	4JG2 TBO	MT/AT	3100	199112	199805	ISZ-04	8-97063-622-0	ISIR-1004	8-94312-676-0	ISIL-1004	8-94313-103-0
UBS69	4JG2 TBO	MT/AT	3100	199112	199805	ISZ-04	8-97063-620-0	ISIR-1004	8-94312-676-0	ISIL-1004	8-94313-103-0
UBS69	4JG2 TBO	MT/AT	3100	199112	199301	ISZ-04	8-97063-621-0	ISIR-1004	8-94312-676-0	ISIL-1004	8-94313-103-0
UBS69	4JG2 TBO	MT/AT	3100	199302	199410	ISZ-04	8-97016-098-0	ISIR-1004	8-94312-676-0	ISIL-1004	8-94313-103-0
UBS69	4JG2 TBO	MT/AT	3100	199302	199311		8-97065-119-0				
UBS69	4JG2 TBO	MT/AT	3100	199312	199410	ISZ-04	8-97109-762-0	ISIR-1004	8-94312-676-0	ISIL-1004	8-94313-103-0
UBS69	4JG2 TBO	MT/AT	3100	199411	199504		8-97116-332-0				
UBS69	4JG2 TBO	MT/AT	3100	199411	199805	ISZ-06	8-97117-215-0				
UBS69	4JG2 TBO	MT/AT	3100	199505	199805		8-97116-332-0				
UBS69	4JG2 TBO	MT/AT	3100	199505	199805		8-97116-334-0				
UBS69	4JG2 TBO	MT/AT	3100	199505	199805		8-97116-334-0				
UBS69	4JG2 TBO	MT/AT	3100	199506	199805	ISZ-06	8-97117-244-0				
UBS25	6VD1	MT/AT	3200	199112	199301	ISZ-04	8-94374-779-1	ISIR-1004	8-94312-676-0	ISIL-1004	8-94313-103-0
UBS25	6VD1	MT/AT	3200	199112	199805	ISZ-04	8-97063-622-0	ISIR-1004	8-94312-676-0	ISIL-1004	8-94313-103-0
UBS25	6VD1	MT/AT	3200	199112	199805	ISZ-04	8-97063-620-0	ISIR-1004	8-94312-676-0	ISIL-1004	8-94313-103-0
UBS25	6VD1	AT	3200	199112	199301	ISZ-04	8-97063-620-0	ISIR-1004	8-94312-676-0	ISIL-1004	8-94313-103-0
UBS25	6VD1	MT/AT	3200	199302	199410		8-97016-098-0				
UBS25	6VD1	AT	3200	199302	199311	ISZ-04	8-97065-119-0	ISIR-1004	8-94312-676-0	ISIL-1004	8-94313-103-0
UBS25	6VD1	AT	3200	199312	199410	ISZ-04	8-97109-762-0	ISIR-1004	8-94312-676-0	ISIL-1004	8-94313-103-0
UBS25	6VD1	MT/AT	3200	199411	199504		8-97116-332-0				
UBS25	6VD1	AT	3200	199411	199805	ISZ-06	8-97117-215-0				
UBS25	6VD1	MT/AT	3200	199505			8-97116-332-0				
UBS25	6VD1	MT/AT	3200	199505			8-97116-334-0				
UBS25	6VD1	MT/AT	3200	199505			8-97116-334-0				
UBS26	6VE1	MT/AT	3500	199805	200106	ISZ-06	8-97183-948-0				
UBS26	6VE1	MT/AT	3500	199805	200106	ISZ-06	8-97183-946-0				
UBS26	6VE1	MT/AT	3500	199805	200106	ISZ-06	8-97200-101-0				
UBS26	6VE1	MT/AT	3500	199805	200106	ISZ-06	8-97200-102-0				
UBS26	6VE1	MT/AT	3500	199805	200106	ISZ-06	8-97200-101-0				
UBS26	6VE1	MT/AT	3500	199805	200106	ISZ-06	8-97200-102-0				
TIGRA											
1.4L(66KW)	X14XE	MT	1400	199407	20012	OP-3359A29	0374218				
1.6L(78KW)	X16XEL	MT	1600	199407	20012	OP-1118	0374263	OPIU-5002	0374027	OPIU-5002	0374027
VECTRA A											
	1.6L	MT	1600	198804	199312	OP-3126A29	0374175	OPIU-5002	0374027	OPIU-5002	0374027
	1.6L	MT	1600	198804	199511	OP-1057		OPIU-5002	0374027	OPIU-5002	0374027
	1.6L	MT	1600	198804	199511	OP-3118A43	0374263	OPIU-5002	0374027	OPIU-5002	0374027
	1.7L D	MT	1700	198810	199107	OP-1052A43	0374126	OPIU-5002	0374027	OPIU-5002	0374027
	1.7L	MT	1700	199108	199512	OP-1051A29	0374176	OPIU-5003	0374195	OPIU-5003	0374195
	1.7L TD	MT	1700	199103	199107	OP-1052A43	0374126	OPIU-5002	0374027	OPIU-5002	0374027
	1.7L	MT	1700	199108	199512	OP-1051A29	0374176	OPIU-5003	0374195	OPIU-5003	0374195
	1.8L	MT/AT	1800	198810	199107	OP-1052A43	0374126				
	1.8L	MT	1800	199108	199312	OP-1051A29	0374176	OPIU-5003	0374195	OPIU-5003	0374195
	2.0L	MT	2000	198810	199107	OP-1052A43	0374126				

OPEL

MODEL	ENGINE	AT/MT	CC	YEAR	YEAR	OUTER	O.E No.R	INNER R	O.E No.IR	INNER L	O.E No.IL
	2.0L	MT	2000	199108	199312	OP-1051A29	0374176	OPIU-5003	0374195	OPIU-5003	0374195
	2.0L	MT	2000	198909	199107	OP-1052A43	0374126				
	2.0L	MT	2000	199108	199312	OP-1051A29	0374176	OPIU-5003	0374195	OPIU-5003	0374195
4WD	2.0L	MT	2000	198909	199107	OP-1052A43	0374126	OPIU-5003	0374195	OPIU-5003	0374195
	2.0L	MT	2000	199108	199312	OP-1051A29	0374176	OPIU-5003	0374195	OPIU-5003	0374195
VECTRA B											
	1.6L	MT/AT	1600	199510	200204	OP-1051A29	0374263	OPIU-5002	0374027	OPIU-5002	0374027
	1.7L TD	MT/AT	1700	199510	200204	OP-1051A29	0374262	OPIU-5002	0374027	OPIU-5002	0374027
	1.8LI	MT/AT	1800	199510	200204	OP-1051A29	0374262	OPIU-5002	0374027	OPIU-5002	0374027
	2.0L DI	MT/AT	2000	199510	200204	OP-1051A29	0374262	OPIU-5002	0374027	OPIU-5002	0374027
	2.0LI	MT/AT	2000	199510	200204	OP-1051A29	0374262	OPIU-5002	0374027	OPIU-5002	0374027
	2.5L	MT/AT	2500	199510	200204	OP-1051A29	0374262	OPIU-5002	0374027	OPIU-5002	0374027
ZAFIRA											
	1.6L	MT/AT	1600	199904	200507	OP-1051A29	0 374 003				
	1.6L	MT/AT	1600	200507		OP-504	1 603 273				
	1.8L	MT/AT	1800	199904		OP-1051A29	0374003				
	2.0L DI	MT/AT	2000	199809		OP-1051A29	0374003				

PEUGEOT

MODEL	ENGINE	AT/MT	CC	YEAR	YEAR	OUTER	O.E No.R	INNER R	O.E No.IR	INNER L	O.E No.IL
BOXER											
230	XUD9	MT	1900	1994/03	200204	PG-53A54	9566722180				
230	XUD9	MT	1900	1994/03	200204	PG-78	3 273.10				
230	XUD9	MT	1900	1994/03	200204	PG-78A54	9566722380				
230	XU10	MT	2000	1994/03	200204	PG-53A54	9566722180				
230	XU10	MT	2000	1994/03	200204	PG-78	3 272.V4				
230	XU10	MT	2000	1994/03	200204	PG-78A54	9566722380				
230	DJ5	MT	2400	1994/03	200204	PG-53A54	9566722180				
230	DJ5	MT	2400	1994/03	200204	PG-78	3 273.10				
230	DJ5	MT	2400	1994/03	200204	PG-78A54	9566722380				
230	HDI	MT	2800	1994/03	200204	PG-53A54	9566722180				
230	HDI	MT	2800	1994/03	200204	PG-78	3 272.V4				
230	HDI	MT	2800	1994/03	200204	PG-78A54	9566722380				
PARTNER											
	1.8L	MT	1800	199707		PG-87	3272-Y3				
	1.9L D	MT	1900	199707		PG-87	3272-Y3				
205											
	1.9L	MT	1900	198609		PG-12	2.1082E+10				
	1.9L	MT	1900	198610	199012	PG-12A48	96141637				
	1.9L	MT	1900	198610	199012	PG-12A48	96141637				
	1.9L TD	MT	1900	199110		PG-12	2.1082E+10				
206											
	1.1L	MT	1100	199809		PG-206A48	3272.3C	PG-272032	3273.3X	PG-272031	3272.6E
	1.4L GI	MT	1400	199810		PG-206A48	3272.3C	PG-272032	3273.Q2	PG-272031	3272.H8
	1.6L	MT	1600	199810	200012	PG-206A48	3272.3C	PG-272032	3273.Z4	PG-272031	3272.T2
207											
	1.4L Hdi	AT/MT	1400	200604		PG-365	3272-5X				
	1.6L 16V	AT/MT	1600	200604		PG-365	3272-5X				
305											
	1.3L	MT	1300	198208	198912	PG-69	327485				
	1.5L	AT	1500	198208	198912	PG-69	327485				
	1.6L	MT	1600	198208	198912	PG-69	327485				
	1.9L	MT	1900	198208	198912	PG-69	327485				
306											
	1.6L	MT	1600	199201		PG-12	2.1082E+10				
	1.8L	AT/MT	1800	199201		PG-12	95656595				
	1.8L	AT/MT	1800	199304		PG-12A48	96141637				
	1.9L D/TD	AT/MT	1900	199201		PG-12	2.1082E+10				
	1.9L	AT/MT	1900	199304		PG-12A48	96141637				
	1.9L	AT/MT	1900	199201		PG-62	3272-E3				
	1.9 D	AT/MT	1900	199506	199606	PG-62	3272-E3				
	1.9 TD	AT/MT	1900	199506	199606	PG-62	3272-E3				
	2.0L	MT	2000	199506	199606	PG-62	3272-E3				
307											
	1.4 55 kW	AT/MT	1400	200008		PG-365	3272-5X				
	1.4 16V 65 kW	AT/MT	1400	200401		PG-365	3272-5X				
	1.6 16V 80 Kw	AT/MT	1600	200008		PG-365	3272-5X				
	1.6 HDi 80 kW	AT/MT	1600	200401		PG-364	3272-1X				
	2.0 16V 110kW	AT/MT	2000	200001		PG-364	3272-1X				
	2.0 HDi 66/79kW	AT/MT	2000	200001		PG-364	3272-1X				
309											
	1.9L GTI	MT	1900	198702		PG-12	2.1082E+10				
	1.9L	MT	1900	199207		PG-12A48	96141637				
	1.9L	MT	1900	198807	199206	PG-40	95643689				
	1.9L TD	MT	1900	198907		PG-12	2.1082E+10				
	1.9L TD	MT	1900	199207		PG-12A48	96141637				
	1.9L TD	MT	1900	198807	199206	PG-40	95643689				
	1.9L GTI	MT	1900	198807	199312	PG-12A48	96141637				
405											
	1.3L GI	MT	1300	198208	198704	PG-69	327485				
	1.4L GI	MT	1400	198705	199201	PG-69	327485				
	1.6L	MT	1600	198705	199201	PG-12	2.1082E+10				
	1.6L	MT	1600	198705	199207	PG-40	95643689				
	1.6L	MT	1600	198705	199207	PG-12	95656595				
	1.6L SR	MT	1600	198705	199201	PG-69	327485				
	1.7L TD	MT	1700	199201	199510	PG-73	3273N2				
	1.7L TD	MT	1700	199307	199510	PG-08	3273.L4				
	1.9L SRi	AT/MT	1900	199208	199610	PG-62	3272-E3				
	1.9L D	AT/MT	1900	198705	199201	PG-12	2.1082E+10				
	1.9L TD	AT/MT	1900	198705	199207	PG-40	95643689				
	1.9L TD	AT/MT	1900	198705	199207	PG-12	95656595				
	1.9L	AT/MT	1900	198705	199201	PG-69	327485				
	1.9L	AT/MT	1900	198705	199201	PG-12	2.1082E+10				
	1.9L T	MT	1900	198705	199201	PG-12	2.1082E+10				
	1.9L T	MT	1900	199201	199510	PG-73	3273N2				
	1.9L TD	MT	1900	199201	199510	PG-73	3273N2				
	1.9L TD	MT	1900	198705	199201	PG-12	2.1082E+10				
	1.9L TD	MT	1900	198705	199207	PG-12A48	96141637				

PEUGEOT

MODEL	ENGINE	AT/MT	CC	YEAR	YEAR	OUTER	O.E No.R	INNER R	O.E No.IR	INNER L	O.E No.IL
	1.9L TD	MT	1900	199208	199610	PG-62	3272-E3				
	1.9L TD	AT/MT	1900	198705	199207	PG-40	95643689				
	1.9L TD	AT/MT	1900	198705	199207	PG-12	95656595				
	2.0L 4B	AT/MT	2000	199208	199610	PG-62	3272-E3				
406											
	1.6L	MT	1600	199511		PG-81A29	3272-S6				
	1.8L	MT	1800	199511		PG-81A29	3272-S6				
	1.9L	MT	1900	199601		PG-81A29	3272-S6				
	2.0L	MT	2000	199511		PG-81A29	3272-S6				
	2.0L	MT	2000	199610		PG-74	3272-S5				
	2.1L	MT	2100	199610		PG-74	3272-S5				
605											
	2.0L	MT	2000	199001		PG-51A48	3273-K1				
	2.1L	MT	2100	199001		PG-51A48	3273-K1				
	3.0L	MT	3000	199001		PG-52A48	3273-A6				
	2.0L	AT	2000	199001		PG-51A48	3273-K1				
	2.1L	AT	2100	199001		PG-51A48	3273-K1				
	3.0L	AT	3000	199001		PG-52A48	3273-A6				

RUS

MODEL	ENGINE	AT/MT	CC	YEAR	YEAR	OUTER	O.E No.R	INNER R	O.E No.IR	INNER L	O.E No.IL
VAZ SAMARA											
2108	-	MT	1500	198406		LD-001	2108-2215012	LDIN-01	2108-2215056	LDIN-01	2108-2215056
2109	-	MT	1500	198706		LD-001	2108-2215012	LDIN-01	2108-2215056	LDIN-01	2108-2215056
2115	-	MT	1500	200006		LD-001	2108-2215012	LDIN-01	2108-2215056	LDIN-01	2108-2215056
21099	-	MT	1500	199006		LD-001	2108-2215012	LDIN-01	2108-2215056	LDIN-01	2108-2215056
VAZ 110											
2110	-	MT	1500	199606		LD-001	2110-2215012	LDIN-01	2108-2215056	LDIN-01	2108-2215056
VAZ 111											
2111	-	MT	1500	199806		LD-001	2110-2215012	LDIN-01	2108-2215056	LDIN-01	2108-2215056
VAZ 112											
2112	-	MT	1500	200006		LD-001	2110-2215012	LDIN-01	2108-2215056	LDIN-01	2108-2215056
VAZ OKA											
1111		MT	750			OK-001	1111-2215012	OKIN-02	1111-2215070	OKIN-02	1111-2215070
VAZ NIVA											
2121		MT	1700			LD-003	2121-2215012	LDIN-003	2121-2215054	LDIN-004	2121-2215055
2123		MT	1700			LD-002	2123-2215012	LDIN-005	2123-2215060-30	LDIN-006	2123-2215061-30
ZAZ TAVRIA											
1.1		MT	1100	198901		TV-01	1102-330320002	TVIN-001		TVIN-001	
1.3		MT	1300	198901		TV-01	1102-330320002	TVIN-001		TVIN-001	
AZLK MOSKVICH											
2141		MT	1700			MK-01	2141-2215054	MKIN-02	2141-2215078	MKIN-02	2141-2215078

SAAB

MODEL	ENGINE	AT/MT	CC	YEAR	YEAR	ASVA No.R	O.E No.R	ASVA No.L	O.E No.L
9000									
	2.0 -16 B202I	AT/MT	2000	198504	199812	SA-004	89 52 905	SA-004	89 52 905
	2.0 -16 CD B204I	AT/MT	2000	198504	199812	SA-004	89 52 905	SA-004	89 52 905
	2.0 -16 Turbo B202XL	AT/MT	2000	198504	199812	SA-004	89 52 905	SA-004	89 52 905
	2.3 -16 CD B234I	AT/MT	2300	198504	199812	SA-004	89 52 905	SA-004	89 52 905
	2.3 -16 CDE B234I	AT/MT	2300	198504	199812	SA-004	89 52 905	SA-004	89 52 905
	2.0 -16 B202XI	AT/MT	2000	198409	199812	SA-004	89 52 905	SA-004	89 52 905
	2.0 -16 B202XI (KAT)	AT/MT	2000	198409	199812	SA-004	89 52 905	SA-004	89 52 905
	2.0 -16 CS B202I	AT/MT	2000	198409	199812	SA-004	89 52 905	SA-004	89 52 905
	2.0 -16 CS B204I	AT/MT	2000	198409	199812	SA-004	89 52 905	SA-004	89 52 905
	2.0 -16 Turbo B202	AT/MT	2000	198409	199812	SA-004	89 52 905	SA-004	89 52 905
	2.0 -16 Turbo B202XL	AT/MT	2000	198409	199812	SA-004	89 52 905	SA-004	89 52 905
	2.0 -16 Turbo B202XL	AT/MT	2000	198409	199812	SA-004	89 52 905	SA-004	89 52 905
	2.3 -16 CS B234I	AT/MT	2300	198409	199812	SA-004	89 52 905	SA-004	89 52 905
	2.3 -16 CSE B234I	AT/MT	2300	198409	199812	SA-004	89 52 905	SA-004	89 52 905

SEAT

MODEL	ENGINE	AT/MT	CC	YEAR	YEAR	OUTER	O.E No.R	INNER R	O.E No.IR	INNER L	O.E No.IL
ALTEA											
5P1	BXW	5MT	1400	200605		VW-B61	1K0 498 099	VWIU-5021	1K0 498 103	VWIU-5021	1K0 498 103
5P1	CAXC	6MT	1400	200711		VW-B61	1K0 498 099	VWIU-5021	1K0 498 103	VWIU-5021	1K0 498 103
5P1	BGU	5MT	1600	200403	200505	VW-B61	1K0 498 099	VWIU-5021	1K0 498 103	VWIU-5021	1K0 498 103
5P1	BSE	5MT	1600	200505		VW-B61	1K0 498 099	VWIU-5021	1K0 498 103	VWIU-5021	1K0 498 103
5P1	BSF	5MT	1600	200505		VW-B61	1K0 498 099	VWIU-5021	1K0 498 103	VWIU-5021	1K0 498 103
5P1	CCSA	5MT	1600	200712		VW-B61	1K0 498 099	VWIU-5021	1K0 498 103	VWIU-5021	1K0 498 103
5P1	BZB	6MT	1800	200706		VW-B62	1K0 498 099 B	VWIU-B6M1	1K0 498 103 A	VWIU-B6M1	1K0 498 103 A
5P1	BYT	6MT	1800	200701	200706	VW-B62	1K0 498 099 B	VWIU-B6M1	1K0 498 103 A	VWIU-B6M1	1K0 498 103 A
5P1	BKC	5MT	1900	200404	200605	VW-B61	1K0 498 099	VWIU-5021	1K0 498 103	VWIU-5021	1K0 498 103
5P1	BJB	5MT	1900	200404	200509	VW-B61	1K0 498 099	VWIU-5021	1K0 498 103	VWIU-5021	1K0 498 103
5P1	BLS	5MT	1900	200510		VW-B61	1K0 498 099	VWIU-5021	1K0 498 103	VWIU-5021	1K0 498 103
5P1	BLR	6MT	2000	200405	200511	VW-B61	1K0 498 099	VWIU-5021	1K0 498 103	VWIU-5021	1K0 498 103
5P1	BLY	6MT	2000	200411	200511	VW-B61	1K0 498 099	VWIU-5021	1K0 498 103	VWIU-5021	1K0 498 103
5P1 >>5-5-047 000	AZV	6MT	2000	200605		VW-B62	1K0 498 099 B	VWIU-B6M1	1K0 498 103 A	VWIU-B6M1	1K0 498 103 A
5P1 >>5-5-047 000	BKD	6MT	2000	200605		VW-B62	1K0 498 099 B	VWIU-B6M1	1K0 498 103 A	VWIU-B6M1	1K0 498 103 A
5P1 5-5-047 000>>	AZV	6MT	2000	200605		VW-B62	1K0 498 099 B	VWIU-B6M1	1K0 498 103 A	VWIU-B6M1	1K0 498 103 A
5P1 5-5-047 000>>	BKD	6MT	2000	200605		VW-B62	1K0 498 099 B	VWIU-B6M1	1K0 498 103 A	VWIU-B6M1	1K0 498 103 A
5P1 5-5-047 000>>	BMM	6MT	2000	200511		VW-B62	1K0 498 099 B	VWIU-B6M1	1K0 498 103 A	VWIU-B6M1	1K0 498 103 A
5P1	BMN	6MT	2000	200610			3C0 498 099	VWIU-B6M1	1K0 498 103 A	VWIU-B6M1	1K0 498 103 A
5P1	BLR	6AT	2000	200405	200511	VW-B61	1K0 498 099		1K0 498 103 C		1K0 498 103 C
5P1	BLY	6AT	2000	200411	200511	VW-B61	1K0 498 099		1K0 498 103 C		1K0 498 103 C
5P1	BVY	6AT	2000	200511		VW-B61	1K0 498 099		1K0 498 103 C		1K0 498 103 C
5P1	BVZ	6AT	2000	200511		VW-B61	1K0 498 099		1K0 498 103 C		1K0 498 103 C
5P1	BKD	6AT	2000	200605		VW-B62	1K0 498 099 B	VWIU-B6A1	1K0 498 103 E	VWIU-B6A1	1K0 498 103 E
5P1	AZV	6AT	2000	200605		VW-B62	1K0 498 099 B	VWIU-B6A1	1K0 498 103 E	VWIU-B6A1	1K0 498 103 E
5P1	BWA	6MT	2000	200602		VW-B62	1K0 498 099 B	VWIU-B6M1	1K0 498 103 A	VWIU-B6M1	1K0 498 103 A
5P1	BWA	6AT	2000	200602		VW-B62	1K0 498 099 B	VWIU-B6M1	1K0 498 103 A	VWIU-B6M1	1K0 498 103 A
ALHAMBRA											
ALHAMBRA (7V8, 7V9)	1.8T 20V AJH	AT/MT	1800	199604		FD-075A48	7M0 498 099				
ALHAMBRA (7V8, 7V9)	1.8T 20V AWC	AT/MT	1800	199604		FD-075A48	7M0 498 099				
ALHAMBRA (7V8, 7V9)	1.9 TDI AFN	AT/MT	1900	199604		FD-075A48	7M0 498 099				
ALHAMBRA (7V8, 7V9)	2.0 i ADY	AT/MT	2000	199604		FD-075A48	7M0 498 099				
ALHAMBRA (7V8, 7V9)	2.0 i ATM	AT/MT	2000	199604		FD-075A48	7M0 498 099				
AROSA											
Arosa (6H)	1.4 TDI		1400	200010		SK-1414	6Q0 498 099E				
CORDOBA											
CORDOBA (6K2/C2)	1.8i 16V ADL	AT/MT	1800	199302	199906	VW-011	191 498 099 B	VWIU-5021	191 498 103	VWIU-5021	191 498 103
CORDOBA (6K2/C2)	1.8i ABS	AT/MT	1800	199302	199906	VW-011	191 498 099 B	VWIU-5021	191 498 103	VWIU-5021	191 498 103
CORDOBA (6K2/C2)	1.8i ADZ	AT/MT	1800	199302	199906	VW-011	191 498 099 B	VWIU-5021	191 498 103	VWIU-5021	191 498 103
CORDOBA (6K2/C2)	1.9TD AAZ	AT/MT	1900	199302	199906	VW-011	191 498 099 B	VWIU-5021	191 498 103	VWIU-5021	191 498 103
CORDOBA (6K2/C2)	1.9TDI 1Z	AT/MT	1900	199302	199906	VW-011	191 498 099 B	VWIU-5021	191 498 103	VWIU-5021	191 498 103
CORDOBA (6K2/C2)	1.9TDI AFN	AT/MT	1900	199302	199906	VW-011	191 498 099 B	VWIU-5021	191 498 103	VWIU-5021	191 498 103
CORDOBA (6K2/C2)	1.9TDI AHU	AT/MT	1900	199302	199906	VW-011	191 498 099 B	VWIU-5021	191 498 103	VWIU-5021	191 498 103
CORDOBA (6K2/C2)	2.0i 16V ABF	AT/MT	2000	199302	199906	VW-011	191 498 099 B	VWIU-5021	191 498 103	VWIU-5021	191 498 103
CORDOBA (6K2/C2)	2.0 i 2E	AT/MT	2000	199302	199906	VW-011	191 498 099 B	VWIU-5021	191 498 103	VWIU-5021	191 498 103
CORDOBA (6K2/C2)	2.0 i AGG	AT/MT	2000	199302	199906	VW-011	191 498 099 B	VWIU-5021	191 498 103	VWIU-5021	191 498 103
CORDOBA VARIANT (6K5)	1.6 i 1F	AT/MT	1600	199608	199906	VW-011	191 498 099 B	VWIU-5021	191 498 103	VWIU-5021	191 498 103
CORDOBA VARIANT (6K5)	1.6 i AEE	AT/MT	1600	199608	199906	VW-011	191 498 099 B	VWIU-5021	191 498 103	VWIU-5021	191 498 103
CORDOBA VARIANT (6K5)	1.6 i ALM	AT/MT	1600	199608	199906	VW-011	191 498 099 B	VWIU-5021	191 498 103	VWIU-5021	191 498 103
CORDOBA VARIANT (6K5)	1.9 TDI 1Z	AT/MT	1900	199608	199906	VW-011	191 498 099 B	VWIU-5021	191 498 103	VWIU-5021	191 498 103
CORDOBA VARIANT (6K5)	1.9 TDI AFN	AT/MT	1900	199608	199906	VW-011	191 498 099 B	VWIU-5021	191 498 103	VWIU-5021	191 498 103
CORDOBA VARIANT (6K5)	1.9 TDI AHU	AT/MT	1900	199608	199906	VW-011	191 498 099 B	VWIU-5021	191 498 103	VWIU-5021	191 498 103
Cordoba III (6L2)	1.2		1200	200202		SK-1413	6Q0 498 099D				
Cordoba III (6L2)	1.4 16v		1400	200202		SK-1413	6Q0 498 099D				
Cordoba III (6L2)	1.4 TDI		1400	200202		SK-1414	6Q0 498 099E	VWIU-G41	1J0 498 103 K	VWIU-G41	1J0 498 103 K
Cordoba III (6L2)	1.6		1600	200202		SK-1414	6Q0 498 099E	VWIU-G41	1J0 498 103 K	VWIU-G41	1J0 498 103 K
Cordoba III (6L2)	1.9 SDI		1900	200202		SK-1413	6Q0 498 099D				
Cordoba III (6L2)	1.9 TDI		1900	200202		SK-1414	6Q0 498 099E	VWIU-G41	1J0 498 103 K	VWIU-G41	1J0 498 103 K
IBIZA											
IBIZA II (6K1)	1.8 i 16V ADL	AT/MT	1800	199303	199908	VW-011	191 498 099 B	VWIU-5021	191 498 103	VWIU-5021	191 498 103
IBIZA II (6K1)	1.8 i ABS	AT/MT	1800	199303	199908	VW-011	191 498 099 B	VWIU-5021	191 498 103	VWIU-5021	191 498 103
IBIZA II (6K1)	1.8 i ADZ	AT/MT	1800	199303	199908	VW-011	191 498 099 B	VWIU-5021	191 498 103	VWIU-5021	191 498 103
IBIZA II (6K1)	1.9 TD AAZ	AT/MT	1900	199303	199908	VW-011	191 498 099 B	VWIU-5021	191 498 103	VWIU-5021	191 498 103
IBIZA II (6K1)	2.0 i 2E	AT/MT	2000	199303	199908	VW-011	191 498 099 B	VWIU-5021	191 498 103	VWIU-5021	191 498 103
IBIZA II (6K1)	2.0 i AGG	AT/MT	2000	199303	199908	VW-011	191 498 099 B	VWIU-5021	191 498 103	VWIU-5021	191 498 103
Ibiza IV (6L1)	1.2		1200	200202		SK-1413	6Q0 498 099D				
Ibiza IV (6L1)	1.4 16v		1400	200202		SK-1413	6Q0 498 099D				
Ibiza IV (6L1)	1.8 T		1800	200202		SK-1413	6Q0 498 099D				
Ibiza IV (6L1)	1.8 T FR		1800	200202		SK-1413	6Q0 498 099D				
Ibiza IV (6L1)	1.9 SDI		1900	200202		SK-1413	6Q0 498 099D				
Ibiza IV (6L1)	1.9 TDI		1900	200202		SK-1413	6Q0 498 099D				
Ibiza IV (6L1)	1.4 TDI		1400	200202		SK-1414	6Q0 498 099E				
Ibiza IV (6L1)	1.6		1600	200202		SK-1414	6Q0 498 099E				
Ibiza IV (6L1)	1.9 TDI		1900	200202		SK-1414	6Q0 498 099E				

SEAT

MODEL	ENGINE	AT/MT	CC	YEAR	YEAR	OUTER	O.E No.R	INNER R	O.E No.IR	INNER L	O.E No.IL
LEON											
LEON (1M1)	1.6 AEH	AT/MT	1600	199911		VW-029	1H0 498 099 A				
LEON (1M1)	1.6 AKL	AT/MT	1600	199911		VW-029	1H0 498 099 A				
LEON (1M1)	1.8 20V AGN	AT/MT	1800	199911		VW-029	1H0 498 099 A				
LEON (1M1)	1.8 20V APG	AT/MT	1800	199911		VW-029	1H0 498 099 A				
LEON (1M1)	1.9 TDI AGR	AT/MT	1900	199911		VW-029	1H0 498 099 A				
LEON (1M1)	1.9 TDI AHF	AT/MT	1900	199911		VW-029	1H0 498 099 A				
LEON (1M1)	1.9 TDI ALH	AT/MT	1900	199911		VW-029	1H0 498 099 A				
LEON (1M1)	1.9 TDI ASV	AT/MT	1900	199911		VW-029	1H0 498 099 A				
1P1	BXW	5MT	1400	200606		VW-B61	1K0 498 099	VWIU-5021	1K0 498 103	VWIU-5021	1K0 498 103
1P1	CAXC	6MT	1400	200711		VW-B61	1K0 498 099	VWIU-5021	1K0 498 103	VWIU-5021	1K0 498 103
1P1	BSE	5MT	1600	200507		VW-B61	1K0 498 099	VWIU-5021	1K0 498 103	VWIU-5021	1K0 498 103
1P1	BSF	5MT	1600	200507		VW-B61	1K0 498 099	VWIU-5021	1K0 498 103	VWIU-5021	1K0 498 103
1P1	CCSA	5MT	1600	200712		VW-B61	1K0 498 099	VWIU-5021	1K0 498 103	VWIU-5021	1K0 498 103
1P1	BZB	6MT	1800	200706		VW-B62	1K0 498 099 B	VWIU-B6M1	1K0 498 103 A	VWIU-B6M1	1K0 498 103 A
1P1	BYT	6MT	1800	200701	200706	VW-B62	1K0 498 099 B	VWIU-B6M1	1K0 498 103 A	VWIU-B6M1	1K0 498 103 A
1P1	BKC	5MT	1900	200507	200602	VW-B61	1K0 498 099	VWIU-5021	1K0 498 103	VWIU-5021	1K0 498 103
1P1	BLS	5MT	1900	200511		VW-B61	1K0 498 099	VWIU-5021	1K0 498 103	VWIU-5021	1K0 498 103
1P1	BXF	5MT	1900	200706		VW-B61	1K0 498 099	VWIU-5021	1K0 498 103	VWIU-5021	1K0 498 103
1P1	BXE	5MT	1900	200602		VW-B61	1K0 498 099	VWIU-5021	1K0 498 103	VWIU-5021	1K0 498 103
1P1	BLS	5MT	1900	200510		VW-B61	1K0 498 099	VWIU-5021	1K0 498 103	VWIU-5021	1K0 498 103
1P1	BLR	6MT	2000	200507	200511	VW-B61	1K0 498 099	VWIU-5021	1K0 498 103	VWIU-5021	1K0 498 103
1P1	BLY	6MT	2000	200507	200511	VW-B61	1K0 498 099	VWIU-5021	1K0 498 103	VWIU-5021	1K0 498 103
1P1	BVY	6MT	2000	200511		VW-B61	1K0 498 099	VWIU-5021	1K0 498 103	VWIU-5021	1K0 498 103
1P1	BVZ	6MT	2000	200511		VW-B61	1K0 498 099	VWIU-5021	1K0 498 103	VWIU-5021	1K0 498 103
1P1	AZV	6MT	2000	200507		VW-B62	1K0 498 099 B	VWIU-B6M1	1K0 498 103 A	VWIU-B6M1	1K0 498 103 A
1P1	BKD	6MT	2000	200507		VW-B62	1K0 498 099 B	VWIU-B6M1	1K0 498 103 A	VWIU-B6M1	1K0 498 103 A
1P1	BMM	6MT	2000	200510		VW-B62	1K0 498 099 B	VWIU-B6M1	1K0 498 103 A	VWIU-B6M1	1K0 498 103 A
1P1	BWA	6MT	2000	200505		VW-B62	1K0 498 099 B	VWIU-B6M1	1K0 498 103 A	VWIU-B6M1	1K0 498 103 A
1P1	BWJ	6MT	2000	200611		VW-B62	1K0 498 099 B	VWIU-B6M1	1K0 498 103 A	VWIU-B6M1	1K0 498 103 A
1P1	BMN	6MT	2000	200602			3C0 498 099	VWIU-B6M1	1K0 498 103 A	VWIU-B6M1	1K0 498 103 A
1P1	BWA	6AT	2000	200505		VW-B62	1K0 498 099 B	VWIU-B6M1	1K0 498 103 A	VWIU-B6M1	1K0 498 103 A
1P1	AZV	6AT	2000	200507		VW-B62	1K0 498 099 B	VWIU-B6A1	1K0 498 103 E	VWIU-B6A1	1K0 498 103 E
1P1	BKD	6AT	2000	200507		VW-B62	1K0 498 099 B	VWIU-B6A1	1K0 498 103 E	VWIU-B6A1	1K0 498 103 E
1P1	BMM	6AT	2000	200510		VW-B62	1K0 498 099 B	VWIU-B6A1	1K0 498 103 E	VWIU-B6A1	1K0 498 103 E
TOLEDO											
TOLEDO I (1L)	1.6 i 1F	AT/MT	1600	199101	199903	VW-011	191 498 099 B	VWIU-5021	191 498 103	VWIU-5021	191 498 103
TOLEDO I (1L)	1.6 i 1F	AT/MT	1600	199101	199903	VW-011	191 498 099 B	VWIU-5021	191 498 103	VWIU-5021	191 498 103
TOLEDO I (1L)	1.6 i 1F	AT/MT	1600	199101	199903	VW-011	191 498 099 B	VWIU-5021	191 498 103	VWIU-5021	191 498 103
TOLEDO I (1L)	1.6 i ABN	AT/MT	1600	199101	199903	VW-011	191 498 099 B	VWIU-5021	191 498 103	VWIU-5021	191 498 103
TOLEDO I (1L)	1.6 i EZ	AT/MT	1600	199101	199903	VW-011	191 498 099 B	VWIU-5021	191 498 103	VWIU-5021	191 498 103
TOLEDO I (1L)	1.8 i ABS	AT/MT	1800	199101	199903	VW-011	191 498 099 B	VWIU-5021	191 498 103	VWIU-5021	191 498 103
TOLEDO I (1L)	1.8 i ADZ	AT/MT	1800	199101	199903	VW-011	191 498 099 B	VWIU-5021	191 498 103	VWIU-5021	191 498 103
TOLEDO I (1L)	1.8 i RP	AT/MT	1800	199101	199903	VW-011	191 498 099 B	VWIU-5021	191 498 103	VWIU-5021	191 498 103
TOLEDO I (1L)	1.9 D 1Y	AT/MT	1900	199101	199903	VW-011	191 498 099 B	VWIU-5021	191 498 103	VWIU-5021	191 498 103
TOLEDO I (1L)	1.9 TD AAZ	AT/MT	1900	199101	199903	VW-011	191 498 099 B	VWIU-5021	191 498 103	VWIU-5021	191 498 103
TOLEDO I (1L)	1.9 TDI 1Z	AT/MT	1900	199101	199903	VW-011	191 498 099 B	VWIU-5021	191 498 103	VWIU-5021	191 498 103
TOLEDO I (1L)	1.9 TDI AFN	AT/MT	1900	199101	199903	VW-011	191 498 099 B	VWIU-5021	191 498 103	VWIU-5021	191 498 103
TOLEDO I (1L)	1.9 TDI AHU	AT/MT	1900	199101	199903	VW-011	191 498 099 B	VWIU-5021	191 498 103	VWIU-5021	191 498 103
TOLEDO I (1L)	2.0 i 2E	AT/MT	2000	199101	199903	VW-011	191 498 099 B	VWIU-5021	191 498 103	VWIU-5021	191 498 103
TOLEDO I (1L)	2.0 i AGG	AT/MT	2000	199101	199903	VW-011	191 498 099 B	VWIU-5021	191 498 103	VWIU-5021	191 498 103
TOLEDO II (1M2)	1.8 20V AGN	AT/MT	1800	199911		VW-029	1H0 498 099 A				
TOLEDO II (1M2)	1.8 20V APG	AT/MT	1800	199911		VW-029	1H0 498 099 A				
TOLEDO II (1M2)	1.9 TDI AGR	AT/MT	1900	199911		VW-029	1H0 498 099 A	VWIU-5021	191 498 103	VWIU-5021	191 498 103
TOLEDO II (1M2)	1.9 TDI AHF	AT/MT	1900	199911		VW-029	1H0 498 099 A	VWIU-5021	191 498 103	VWIU-5021	191 498 103
TOLEDO II (1M2)	1.9 TDI ALH	AT/MT	1900	199911		VW-029	1H0 498 099 A	VWIU-5021	191 498 103	VWIU-5021	191 498 103
TOLEDO II (1M2)	1.9 TDI ASV	AT/MT	1900	199911		VW-029	1H0 498 099 A	VWIU-5021	191 498 103	VWIU-5021	191 498 103
5P2	BXW	5MT	1400	200605	200706		1K0 498 099 D		1K0 498 103 B		1K0 498 103 B
5P2	CAXC	6MT	1400	200711		VW-B61	1K0 498 099	VWIU-5021	1K0 498 103	VWIU-5021	1K0 498 103
5P2	BSE	5MT	1600	200505		VW-B61	1K0 498 099	VWIU-5021	1K0 498 103	VWIU-5021	1K0 498 103
5P2	BSF	5MT	1600	200505		VW-B61	1K0 498 099	VWIU-5021	1K0 498 103	VWIU-5021	1K0 498 103
5P2	CCSA	5MT	1600	200712		VW-B61	1K0 498 099	VWIU-5021	1K0 498 103	VWIU-5021	1K0 498 103
5P2	BKC	5MT	1900	200409	200602	VW-B61	1K0 498 099	VWIU-5021	1K0 498 103	VWIU-5021	1K0 498 103
5P2	BJB	5MT	1900	200409	200509	VW-B61	1K0 498 099	VWIU-5021	1K0 498 103	VWIU-5021	1K0 498 103
5P2	BLS	5MT	1900	200510		VW-B61	1K0 498 099	VWIU-5021	1K0 498 103	VWIU-5021	1K0 498 103
5P2	BXE	5MT	1900	200602		VW-B61	1K0 498 099	VWIU-5021	1K0 498 103	VWIU-5021	1K0 498 103
5P2	BVY	6MT	2000	200511		VW-B61	1K0 498 099	VWIU-5021	1K0 498 103	VWIU-5021	1K0 498 103
5P2	BVZ	6MT	2000	200511		VW-B61	1K0 498 099	VWIU-5021	1K0 498 103	VWIU-5021	1K0 498 103
5P2	BLY	6MT	2000	200411	200511	VW-B61	1K0 498 099	VWIU-5021	1K0 498 103	VWIU-5021	1K0 498 103
5P2	AZV	6MT	2000	200409	200706	VW-B62	1K0 498 099 B	VWIU-B6M1	1K0 498 103 A	VWIU-B6M1	1K0 498 103 A
5P2	BKD	6MT	2000	200409		VW-B62	1K0 498 099 B	VWIU-B6M1	1K0 498 103 A	VWIU-B6M1	1K0 498 103 A
5P2	BMM	6MT	2000	200601		VW-B62	1K0 498 099 B	VWIU-B6M1	1K0 498 103 A	VWIU-B6M1	1K0 498 103 A
5P2	BMN	6MT	2000	200601			3C0 498 099	VWIU-B6M1	1K0 498 103 A	VWIU-B6M1	1K0 498 103 A
5P2	BLR	6AT	2000	200409	200511	VW-B61	1K0 498 099		1K0 498 103 C		1K0 498 103 C
5P2	BLY	6AT	2000	200411	200511	VW-B61	1K0 498 099		1K0 498 103 C		1K0 498 103 C
5P2	BVY	6AT	2000	200511		VW-B61	1K0 498 099		1K0 498 103 C		1K0 498 103 C
5P2	BVZ	6AT	2000	200511		VW-B61	1K0 498 099		1K0 498 103 C		1K0 498 103 C
5P2 >>5P-5-047 000	BKD	6AT	2000	200409		VW-B62	1K0 498 099 B		1K0 498 104	VWIU-B6A1	1K0 498 103 E
5P2	BWA	6AT	2000	200511		VW-B62	1K0 498 099 B	VWIU-B6M1	1K0 498 103 A	VWIU-B6M1	1K0 498 103 A
5P2 5P-5-047 001>>	BKD	6AT	2000	200409		VW-B62	1K0 498 099 B	VWIU-B6A1	1K0 498 103 E	VWIU-B6A1	1K0 498 103 E
5P2 5P-5-047 001>>	AZV	6AT	2000	200409	200706	VW-B62	1K0 498 099 B	VWIU-B6A1	1K0 498 103 E	VWIU-B6A1	1K0 498 103 E

SKODA

MODEL	ENGINE	AT/MT	CC	YEAR	YEAR	OUTER	O.E No.R	INNER R	O.E No.IR	INNER L	O.E No.IL
FABIA											
Fabia (6Y2, 3, 5), SW	1.0 (Exc. SW)		1000	200009		SK-1403	6Q0 498 099C				
Fabia (6Y2, 3, 5), SW	1.2		1200	200009		SK-1403	6Q0 498 099C				
Fabia (6Y2, 3, 5), SW	1.2, Praktik		1200	200009		SK-1403	6Q0 498 099C				
Fabia (6Y2, 3, 5), SW	1.4		1400	200009		SK-1413	6Q0 498 099D				
Fabia (6Y2, 3, 5), SW	1.4 16v		1400	200009		SK-1413	6Q0 498 099D				
Fabia (6Y2, 3, 5), SW	1.4		1400	200009		SK-1403	6Q0 498 099C				
Fabia (6Y2, 3, 5), SW	1.4 TDI		1400	200009		SK-1403	6Q0 498 099C				
Fabia (6Y2, 3, 5), SW	1.4 TDI		1400	200009		SK-1414	6Q0 498 099E	VWIU-G41	1J0 498 103 K	VWIU-G41	1J0 498 103 K
Fabia (6Y2, 3, 5), SW	1.9 SDI		1900	200009		SK-1413	6Q0 498 099D				
Fabia (6Y2, 3, 5), SW	1.9 TDI		1900	200009		SK-1414	6Q0 498 099E	VWIU-G41	1J0 498 103 K	VWIU-G41	1J0 498 103 K
Fabia (6Y2, 3, 5), SW	2.0		2000	200009		SK-1414	6Q0 498 099E	VWIU-G41	1J0 498 103 K	VWIU-G41	1J0 498 103 K
FAVORIT											
FAVORIT (781)	1.3 (781) 136B	AT/MT	1300	198905	199409	SK-1158	115 420 174	SK-3-5010	6U0 498 103 A	SK-3-5010	6U0 498 103 A
FAVORIT (781)	1.3 135 (781)	AT/MT	1300	198905	199409	SK-1158	115 420 174	SK-3-5010	6U0 498 103 A	SK-3-5010	6U0 498 103 A
FAVORIT (781)	1.3 135 (781)	AT/MT	1300	198905	199409	SK-1158	115 420 174	SK-3-5010	6U0 498 103 A	SK-3-5010	6U0 498 103 A
FAVORIT (781)	1.3 135L (781)	AT/MT	1300	198905	199409	SK-1158	115 420 174	SK-3-5010	6U0 498 103 A	SK-3-5010	6U0 498 103 A
FAVORIT (781)	1.3 136 (781)	AT/MT	1300	198905	199409	SK-1158	115 420 174	SK-3-5010	6U0 498 103 A	SK-3-5010	6U0 498 103 A
FAVORIT Pick-Up (787)	1.3 135B	AT/MT	1300	199108	199506	SK-1158	115 420 174	SK-3-5010	6U0 498 103 A	SK-3-5010	6U0 498 103 A
FAVORIT Pick-Up (787)	1.3 136B	AT/MT	1300	199108	199506	SK-1158	115 420 174	SK-3-5010	6U0 498 103 A	SK-3-5010	6U0 498 103 A
FAVORIT Pick-Up (787)	1.3	AT/MT	1300	199212	199706	SK-1158	115 420 174	SK-3-5010	6U0 498 103 A	SK-3-5010	6U0 498 103 A
FAVORIT Forman (785)	1.3 (135 E)	AT/MT	1300	199108	199506	SK-1158	115 420 174	SK-3-5010	6U0 498 103 A	SK-3-5010	6U0 498 103 A
FAVORIT Forman (785)	1.3 (135)	AT/MT	1300	199108	199506	SK-1158	115 420 174	SK-3-5010	6U0 498 103 A	SK-3-5010	6U0 498 103 A
FAVORIT Forman (785)	1.3 (136) OHC	AT/MT	1300	199108	199506	SK-1158	115 420 174	SK-3-5010	6U0 498 103 A	SK-3-5010	6U0 498 103 A
FAVORIT Forman (785)	1.3 136B	AT/MT	1300	199108	199506	SK-1158	115 420 174	SK-3-5010	6U0 498 103 A	SK-3-5010	6U0 498 103 A
FELICIA											
FELICIA I (791)	1.3 135 L	AT/MT	1300	199410	199803	SK-1158	115 420 174	SK-3-5010	6U0 498 103 A	SK-3-5010	6U0 498 103 A
FELICIA I (791)	1.3 135B	AT/MT	1300	199410	199803	SK-1158	115 420 174	SK-3-5010	6U0 498 103 A	SK-3-5010	6U0 498 103 A
FELICIA I (791)	1.3 136B	AT/MT	1300	199410	199803	SK-1158	115 420 174	SK-3-5010	6U0 498 103 A	SK-3-5010	6U0 498 103 A
FELICIA I (791)	1.3 AMG	AT/MT	1300	199410	199803	SK-1158	115 420 174	SK-3-5010	6U0 498 103 A	SK-3-5010	6U0 498 103 A
FELICIA I (791)	1.3 AMH	AT/MT	1300	199410	199803	SK-1158	115 420 174	SK-3-5010	6U0 498 103 A	SK-3-5010	6U0 498 103 A
FELICIA I (791)	1.3 AMJ	AT/MT	1300	199410	199803	SK-1158	115 420 174	SK-3-5010	6U0 498 103 A	SK-3-5010	6U0 498 103 A
FELICIA I (791)	1.6 LX AEE	AT/MT	1600	199410	199803	SK-1158	115 420 174	SK-3-5010	6U0 498 103 A	SK-3-5010	6U0 498 103 A
FELICIA I (791)	1.9 D AEF	AT/MT	1900	199410	199803	SK-1158	115 420 174	SK-3-5010	6U0 498 103 A	SK-3-5010	6U0 498 103 A
FELICIA I Pick-Up (797)	1.3 135B	AT/MT	1300	199706		SK-1158	115 420 174	SK-3-5010	6U0 498 103 A	SK-3-5010	6U0 498 103 A
FELICIA I Pick-Up (797)	1.3 135M	AT/MT	1300	199706		SK-1158	115 420 174	SK-3-5010	6U0 498 103 A	SK-3-5010	6U0 498 103 A
FELICIA I Pick-Up (797)	1.3 136B	AT/MT	1300	199706		SK-1158	115 420 174	SK-3-5010	6U0 498 103 A	SK-3-5010	6U0 498 103 A
FELICIA I Pick-Up (797)	1.3 136M	AT/MT	1300	199706		SK-1158	115 420 174	SK-3-5010	6U0 498 103 A	SK-3-5010	6U0 498 103 A
FELICIA I Pick-Up (797)	1.6 AEE	AT/MT	1600	199706		SK-1158	115 420 174	SK-3-5010	6U0 498 103 A	SK-3-5010	6U0 498 103 A
FELICIA I Pick-Up (797)	1.9 D AEF	AT/MT	1900	199706		SK-1158	115 420 174	SK-3-5010	6U0 498 103 A	SK-3-5010	6U0 498 103 A
FELICIA I SW (795)	1.3 135 L	AT/MT	1300	199507	199803	SK-1158	115 420 174	SK-3-5010	6U0 498 103 A	SK-3-5010	6U0 498 103 A
FELICIA I SW (795)	1.3 AMJ	AT/MT	1300	199507	199803	SK-1158	115 420 174	SK-3-5010	6U0 498 103 A	SK-3-5010	6U0 498 103 A
FELICIA I SW (795)	1.3 LX 135B	AT/MT	1300	199507	199803	SK-1158	115 420 174	SK-3-5010	6U0 498 103 A	SK-3-5010	6U0 498 103 A
FELICIA I SW (795)	1.3 LX AMG	AT/MT	1300	199507	199803	SK-1158	115 420 174	SK-3-5010	6U0 498 103 A	SK-3-5010	6U0 498 103 A
FELICIA I SW (795)	1.3 LXI 136B	AT/MT	1300	199507	199803	SK-1158	115 420 174	SK-3-5010	6U0 498 103 A	SK-3-5010	6U0 498 103 A
FELICIA I SW (795)	1.3 LXI AMH	AT/MT	1300	199507	199803	SK-1158	115 420 174	SK-3-5010	6U0 498 103 A	SK-3-5010	6U0 498 103 A
FELICIA I SW (795)	1.6 GLX AEE	AT/MT	1600	199507	199803	SK-1158	115 420 174	SK-3-5010	6U0 498 103 A	SK-3-5010	6U0 498 103 A
FELICIA I SW (795)	1.9 D AEF	AT/MT	1900	199507	199803	SK-1158	115 420 174	SK-3-5010	6U0 498 103 A	SK-3-5010	6U0 498 103 A
FELICIA II	1.3 AMG	AT/MT	1300	199803	200106	SK-1158	115 420 174	SK-3-5010	6U0 498 103 A	SK-3-5010	6U0 498 103 A
FELICIA II	1.3 AMH	AT/MT	1300	199803	200106	SK-1158	115 420 174	SK-3-5010	6U0 498 103 A	SK-3-5010	6U0 498 103 A
FELICIA II	1.3 AMJ	AT/MT	1300	199803	200106	SK-1158	115 420 174	SK-3-5010	6U0 498 103 A	SK-3-5010	6U0 498 103 A
FELICIA II	1.6 AEE	AT/MT	1600	199803	200106	SK-1158	115 420 174	SK-3-5010	6U0 498 103 A	SK-3-5010	6U0 498 103 A
FELICIA II	1.9 D AEF	AT/MT	1900	199803	200106	SK-1158	115 420 174	SK-3-5010	6U0 498 103 A	SK-3-5010	6U0 498 103 A
FELICIA II SW	1.3 AMH	AT/MT	1300	199803	200106	SK-1158	115 420 174	SK-3-5010	6U0 498 103 A	SK-3-5010	6U0 498 103 A
FELICIA II SW	1.6 AEE	AT/MT	1600	199803	200106	SK-1158	115 420 174	SK-3-5010	6U0 498 103 A	SK-3-5010	6U0 498 103 A
FELICIA II SW	1.9 D AEF	AT/MT	1900	199803	200106	SK-1158	115 420 174	SK-3-5010	6U0 498 103 A	SK-3-5010	6U0 498 103 A
OCTAVIA											
OCTAVIA (1U2)	1.6 AEE	AT/MT	1600	199609		AD-1241	1J0 498 099A				
OCTAVIA (1U2)	1.6 AEH	AT/MT	1600	199609		AD-1241	1J0 498 099A				
OCTAVIA (1U2)	1.6 AEH	AT/MT	1600	199609		VW-029	357 498 099E	VWIU-G41	1J0 498 103 K	VWIU-G41	1J0 498 103 K
OCTAVIA (1U2)	1.6 AKL	AT/MT	1600	199609		AD-1241	1J0 498 099A				
OCTAVIA (1U2)	1.6 AKL	AT/MT	1600	199609		VW-029	357 498 099E	VWIU-G41	1J0 498 103 K	VWIU-G41	1J0 498 103 K
OCTAVIA (1U2)	1.9 SDI AGP	AT/MT	1900	199609		AD-1241	1J0 498 099A				
OCTAVIA (1U2)	1.9 SDI AQM	AT/MT	1900	199609		AD-1241	1J0 498 099A				
OCTAVIA VARIANT (1U5)	1.6 AEH	AT/MT	1600	199807		AD-1241	1J0 498 099A				
OCTAVIA VARIANT (1U5)	1.6 AEH	AT/MT	1600	199807		VW-029	357 498 099E	VWIU-G41	1J0 498 103 K	VWIU-G41	1J0 498 103 K
OCTAVIA VARIANT (1U5)	1.6 AKL	AT/MT	1600	199807		AD-1241	1J0 498 099A				
OCTAVIA VARIANT (1U5)	1.6 AKL	AT/MT	1600	199807		VW-029	357 498 099E	VWIU-G41	1J0 498 103 K	VWIU-G41	1J0 498 103 K
OCTAVIA VARIANT (1U5)	1.9 SDI AGP	AT/MT	1900	199807		AD-1241	1J0 498 099A				
OCTAVIA VARIANT (1U5)	1.9 SDI AQM	AT/MT	1900	199807		AD-1241	1J0 498 099A				
1Z3	BCA	5MT	1400	200405			1K0 498 099 D		1K0 498 103 B		1K0 498 103 B
1Z3	BGU	5MT	1600	200405	200505	VW-B61	1K0 498 099	VWIU-5021	1K0 498 103	VWIU-5021	1K0 498 103
1Z3	BSE	5MT	1600	200505		VW-B61	1K0 498 099	VWIU-5021	1K0 498 103	VWIU-5021	1K0 498 103
1Z3	BSF	5MT	1600	200505		VW-B61	1K0 498 099	VWIU-5021	1K0 498 103	VWIU-5021	1K0 498 103
1Z3	CCSA	5MT	1600	200711		VW-B61	1K0 498 099	VWIU-5021	1K0 498 103	VWIU-5021	1K0 498 103
1Z3	BLF	5MT	1600	200402		VW-B61	1K0 498 099	VWIU-5021	1K0 498 103	VWIU-5021	1K0 498 103
1Z3	BGU	6AT	1600	200405	200505	VW-B61	1K0 498 099		1K0 498 103 C		1K0 498 103 C
1Z3	BSE	6AT	1600	200505		VW-B61	1K0 498 099		1K0 498 103 C		1K0 498 103 C
1Z3	BSF	6AT	1600	200505		VW-B61	1K0 498 099		1K0 498 103 C		1K0 498 103 C
1Z3	BLF	6AT	1600	200402		VW-B61	1K0 498 099		1K0 498 103 C		1K0 498 103 C
1Z3	BZB	6MT	1800	200706		VW-B62	1K0 498 099 B	VWIU-B6M1	1K0 498 103 A	VWIU-B6M1	1K0 498 103 A
1Z3	BKC	5MT	1900	200402		VW-B61	1K0 498 099	VWIU-5021	1K0 498 103	VWIU-5021	1K0 498 103
1Z3	BXE	5MT	1900	200603		VW-B61	1K0 498 099	VWIU-5021	1K0 498 103	VWIU-5021	1K0 498 103
1Z3	BLS	5MT	1900	200605		VW-B61	1K0 498 099	VWIU-5021	1K0 498 103	VWIU-5021	1K0 498 103
1Z3	BJB	5MT	1900	200402		VW-B61	1K0 498 099	VWIU-5021	1K0 498 103	VWIU-5021	1K0 498 103
1Z3 4x4	BKC	6MT	1900	200411	200602	VW-B62	1K0 498 099 B	VWIU-B6M1	1K0 498 103 A	VWIU-B6M1	1K0 498 103 A

SKODA

MODEL	ENGINE	AT/MT	CC	YEAR	YEAR	OUTER	O.E No.R	INNER R	O.E No.IR	INNER L	O.E No.IL
1Z3 4x4	BLS	6MT	1900	200506		VW-B62	1K0 498 099 B	VWIU-B6M1	1K0 498 103 A	VWIU-B6M1	1K0 498 103 A
1Z3 4x4	BXE	6MT	1900	200603		VW-B62	1K0 498 099 B	VWIU-B6M1	1K0 498 103 A	VWIU-B6M1	1K0 498 103 A
1Z3	BKC	6AT	1900	200402		VW-B62	1K0 498 099 B	VWIU-B6A1	1K0 498 103 E	VWIU-B6A1	1K0 498 103 E
1Z3 1Z-5-021 960>> 1Z-5-025 188>>	BLS	6AT	1900	200605		VW-B62	1K0 498 099 B	VWIU-B6A1	1K0 498 103 E	VWIU-B6A1	1K0 498 103 E
1Z3 1Z-5-021 960>> 1Z-5-025 188>>	BXE	6AT	1900	200603		VW-B62	1K0 498 099 B	VWIU-B6A1	1K0 498 103 E	VWIU-B6A1	1K0 498 103 E
1Z3	BLR	6MT	2000	200411	200511	VW-B61	1K0 498 099	VWIU-5021	1K0 498 103	VWIU-5021	1K0 498 103
1Z3	BVX	6MT	2000	200511		VW-B61	1K0 498 099	VWIU-5021	1K0 498 103	VWIU-5021	1K0 498 103
1Z3	BVY	6MT	2000	200511		VW-B61	1K0 498 099	VWIU-5021	1K0 498 103	VWIU-5021	1K0 498 103
1Z3	BVZ	6MT	2000	200511		VW-B61	1K0 498 099	VWIU-5021	1K0 498 103	VWIU-5021	1K0 498 103
1Z3	AZV	6MT	2000	200402		VW-B62	1K0 498 099 B	VWIU-B6M1	1K0 498 103 A	VWIU-B6M1	1K0 498 103 A
1Z3	BKD	6MT	2000	200402		VW-B62	1K0 498 099 B	VWIU-B6M1	1K0 498 103 A	VWIU-B6M1	1K0 498 103 A
1Z3	BMM	6MT	2000	200511		VW-B62	1K0 498 099 B	VWIU-B6M1	1K0 498 103 A	VWIU-B6M1	1K0 498 103 A
1Z3	BLY	6MT	2000	200411	200511	VW-B61	1K0 498 099	VWIU-5021	1K0 498 103	VWIU-5021	1K0 498 103
1Z3	BWA	6MT	2000	200510		VW-B62	1K0 498 099 B	VWIU-B6M1	1K0 498 103 A	VWIU-B6M1	1K0 498 103 A
1Z3 4x4	BMM	6MT	2000	200607		VW-B62	1K0 498 099 B	VWIU-B6M1	1K0 498 103 A	VWIU-B6M1	1K0 498 103 A
1Z3	BMN	6MT	2000	200604			3C0 498 099	VWIU-B6M1	1K0 498 103 A	VWIU-B6M1	1K0 498 103 A
1Z3 4x4	BLX	6MT	2000	200411	200511	VW-B61	1K0 498 099	VWIU-5021	1K0 498 103	VWIU-5021	1K0 498 103
1Z3 4x4	BVX	6MT	2000	200511		VW-B61	1K0 498 099	VWIU-5021	1K0 498 103	VWIU-5021	1K0 498 103
1Z3	BLR	6AT	2000	200411	200511	VW-B61	1K0 498 099		1K0 498 103 C		1K0 498 103 C
1Z3	BVY	6AT	2000	200511		VW-B61	1K0 498 099		1K0 498 103 C		1K0 498 103 C
1Z3	BVZ	6AT	2000	200511		VW-B61	1K0 498 099		1K0 498 103 C		1K0 498 103 C
1Z3	BVX	6AT	2000	200511		VW-B61	1K0 498 099		1K0 498 103 C		1K0 498 103 C
1Z3	BMM	6AT	2000	200511		VW-B62	1K0 498 099 B	VWIU-B6A1	1K0 498 103 E	VWIU-B6A1	1K0 498 103 E
1Z3 >>1Z-5-021 959 >>1Z-5-025 187	AZV	6AT	2000	200402		VW-B62	1K0 498 099 B		1K0 498 104	VWIU-B6A1	1K0 498 103 E
1Z3 >>1Z-5-021 959 >>1Z-5-025 187	BKD	6AT	2000	200402		VW-B62	1K0 498 099 B		1K0 498 104	VWIU-B6A1	1K0 498 103 E
1Z3 1Z-5-021 960>> 1Z-5-025 188>>	AZV	6AT	2000	200402		VW-B62	1K0 498 099 B	VWIU-B6A1	1K0 498 103 E	VWIU-B6A1	1K0 498 103 E
1Z3 1Z-5-021 960>> 1Z-5-025 188>>	BKD	6AT	2000	200402		VW-B62	1K0 498 099 B	VWIU-B6A1	1K0 498 103 E	VWIU-B6A1	1K0 498 103 E
1Z3 1Z-5-021 960>> 1Z-5-025 188>>	BMM	6AT	2000	200511		VW-B62	1K0 498 099 B	VWIU-B6A1	1K0 498 103 E	VWIU-B6A1	1K0 498 103 E
1Z5 Combi	BCA	5MT	1400	200405			1K0 498 099 D		1K0 498 103 B		1K0 498 103 B
1Z5 Combi	BGU	5MT	1600	200405	200505	VW-B61	1K0 498 099	VWIU-5021	1K0 498 103	VWIU-5021	1K0 498 103
1Z5 Combi	BSE	5MT	1600	200505		VW-B61	1K0 498 099	VWIU-5021	1K0 498 103	VWIU-5021	1K0 498 103
1Z5 Combi	BSF	5MT	1600	200505		VW-B61	1K0 498 099	VWIU-5021	1K0 498 103	VWIU-5021	1K0 498 103
1Z5 Combi	CCSA	5MT	1600	200711		VW-B61	1K0 498 099	VWIU-5021	1K0 498 103	VWIU-5021	1K0 498 103
1Z5 Combi	BLF	5MT	1600	200402		VW-B61	1K0 498 099	VWIU-5021	1K0 498 103	VWIU-5021	1K0 498 103
1Z5 Combi	BGU	6AT	1600	200405	200505	VW-B61	1K0 498 099		1K0 498 103 C		1K0 498 103 C
1Z5 Combi	BSE	6AT	1600	200505		VW-B61	1K0 498 099		1K0 498 103 C		1K0 498 103 C
1Z5 Combi	BSF	6AT	1600	200505		VW-B61	1K0 498 099		1K0 498 103 C		1K0 498 103 C
1Z5 Combi	BLF	6AT	1600	200402		VW-B61	1K0 498 099		1K0 498 103 C		1K0 498 103 C
1Z5 Combi	BZB	6MT	1800	200706		VW-B62	1K0 498 099 B	VWIU-B6M1	1K0 498 103 A	VWIU-B6M1	1K0 498 103 A
1Z5 Combi	BKC	5MT	1900	200402		VW-B61	1K0 498 099	VWIU-5021	1K0 498 103	VWIU-5021	1K0 498 103
1Z5 Combi	BXE	5MT	1900	200603		VW-B61	1K0 498 099	VWIU-5021	1K0 498 103	VWIU-5021	1K0 498 103
1Z5 Combi	BLS	5MT	1900	200605		VW-B61	1K0 498 099	VWIU-5021	1K0 498 103	VWIU-5021	1K0 498 103
1Z5 Combi	BJB	5MT	1900	200402		VW-B61	1K0 498 099	VWIU-5021	1K0 498 103	VWIU-5021	1K0 498 103
1Z5 Combi 4x4	BKC	6MT	1900	200411	200602	VW-B62	1K0 498 099 B	VWIU-B6M1	1K0 498 103 A	VWIU-B6M1	1K0 498 103 A
1Z5 Combi 4x4	BLS	6MT	1900	200506		VW-B62	1K0 498 099 B	VWIU-B6M1	1K0 498 103 A	VWIU-B6M1	1K0 498 103 A
1Z5 Combi 4x4	BXE	6MT	1900	200603		VW-B62	1K0 498 099 B	VWIU-B6M1	1K0 498 103 A	VWIU-B6M1	1K0 498 103 A
1Z5 Combi	BKC	6AT	1900	200402		VW-B62	1K0 498 099 B	VWIU-B6A1	1K0 498 103 E	VWIU-B6A1	1K0 498 103 E
1Z5 Combi 1Z-5-021 960>> 1Z-5-025 188>>	BLS	6AT	1900	200605		VW-B62	1K0 498 099 B	VWIU-B6A1	1K0 498 103 E	VWIU-B6A1	1K0 498 103 E
1Z5 Combi 1Z-5-021 960>> 1Z-5-025 188>>	BXE	6AT	1900	200603		VW-B62	1K0 498 099 B	VWIU-B6A1	1K0 498 103 E	VWIU-B6A1	1K0 498 103 E
1Z5 Combi	BLR	6MT	2000	200411	200511	VW-B61	1K0 498 099	VWIU-5021	1K0 498 103	VWIU-5021	1K0 498 103
1Z5 Combi	BVX	6MT	2000	200511		VW-B61	1K0 498 099	VWIU-5021	1K0 498 103	VWIU-5021	1K0 498 103
1Z5 Combi	BVY	6MT	2000	200511		VW-B61	1K0 498 099	VWIU-5021	1K0 498 103	VWIU-5021	1K0 498 103
1Z5 Combi	BVZ	6MT	2000	200511		VW-B61	1K0 498 099	VWIU-5021	1K0 498 103	VWIU-5021	1K0 498 103
1Z5 Combi	AZV	6MT	2000	200402		VW-B62	1K0 498 099 B	VWIU-B6M1	1K0 498 103 A	VWIU-B6M1	1K0 498 103 A
1Z5 Combi	BKD	6MT	2000	200402		VW-B62	1K0 498 099 B	VWIU-B6M1	1K0 498 103 A	VWIU-B6M1	1K0 498 103 A
1Z5 Combi	BMM	6MT	2000	200511		VW-B62	1K0 498 099 B	VWIU-B6M1	1K0 498 103 A	VWIU-B6M1	1K0 498 103 A
1Z5 Combi	BLY	6MT	2000	200411	200511	VW-B61	1K0 498 099	VWIU-5021	1K0 498 103	VWIU-5021	1K0 498 103
1Z5 Combi	BWA	6MT	2000	200510		VW-B62	1K0 498 099 B	VWIU-B6M1	1K0 498 103 A	VWIU-B6M1	1K0 498 103 A
1Z5 Combi 4x4	BMM	6MT	2000	200607		VW-B62	1K0 498 099 B	VWIU-B6M1	1K0 498 103 A	VWIU-B6M1	1K0 498 103 A
1Z5 Combi	BMN	6MT	2000	200604			3C0 498 099	VWIU-B6M1	1K0 498 103 A	VWIU-B6M1	1K0 498 103 A
1Z5 Combi 4x4	BLX	6MT	2000	200411	200511	VW-B61	1K0 498 099	VWIU-5021	1K0 498 103	VWIU-5021	1K0 498 103
1Z5 Combi 4x4	BVX	6MT	2000	200511		VW-B61	1K0 498 099	VWIU-5021	1K0 498 103	VWIU-5021	1K0 498 103
1Z5 Combi	BLR	6AT	2000	200411	200511	VW-B61	1K0 498 099		1K0 498 103 C		1K0 498 103 C
1Z5 Combi	BVY	6AT	2000	200511		VW-B61	1K0 498 099		1K0 498 103 C		1K0 498 103 C
1Z5 Combi	BVZ	6AT	2000	200511		VW-B61	1K0 498 099		1K0 498 103 C		1K0 498 103 C
1Z5 Combi	BVX	6AT	2000	200511		VW-B61	1K0 498 099		1K0 498 103 C		1K0 498 103 C
1Z5 Combi	BMM	6AT	2000	200511		VW-B62	1K0 498 099 B	VWIU-B6A1	1K0 498 103 E	VWIU-B6A1	1K0 498 103 E
1Z5 Combi >>1Z-5-021 959 >>1Z-5-025 187	AZV	6AT	2000	200402		VW-B62	1K0 498 099 B		1K0 498 104	VWIU-B6A1	1K0 498 103 E

SKODA

MODEL	ENGINE	AT/MT	CC	YEAR	YEAR	OUTER	O.E No.R	INNER R	O.E No.IR	INNER L	O.E No.IL
1Z5 Combi >>1Z-5-021 959 >>1Z-5-025 187	BKD	6AT	2000	200402		VW-B62	1K0 498 099 B		1K0 498 104	VWIU-B6A1	1K0 498 103 E
1Z5 Combi 1Z-5-021 960>> 1Z-5-025 188>>	AZV	6AT	2000	200402		VW-B62	1K0 498 099 B	VWIU-B6A1	1K0 498 103 E	VWIU-B6A1	1K0 498 103 E
1Z5 Combi 1Z-5-021 960>> 1Z-5-025 188>>	BKD	6AT	2000	200402		VW-B62	1K0 498 099 B	VWIU-B6A1	1K0 498 103 E	VWIU-B6A1	1K0 498 103 E
1Z5 Combi 1Z-5-021 960>> 1Z-5-025 188>>	BMM	6AT	2000	200511		VW-B62	1K0 498 099 B	VWIU-B6A1	1K0 498 103 E	VWIU-B6A1	1K0 498 103 E
SUPERB											
Superb (3U4)	1.9 TDI	AT/MT	1900	200202		AD-011A45	4D0 498 099				
Superb (3U4)	2.5 TDI	AT/MT	2500	200202		AD-011A45	4D0 498 099				
Superb (3U4)	2.5 TDI	AT/MT	2500	200301		AD-011A45	4D0 498 099				
Superb (3U4)	2.8 V6	AT/MT	2800	200202		AD-011A45	4D0 498 099				

SSANGYONG

MODEL	ENGINE	AT/MT	CC	YEAR	YEAR	OUTER	O.E No.R	INNER R	O.E No.IR	INNER L	O.E No.IL
MUSSO											
	2.9L D	AT/MT	2900	199606	199806	OP-807	4130005100X				
ISTANA											
	2.9L D	AT/MT	2900	199906		ME-ISTA48	6613305001	MEIU-IST	6613304801	MEIU-IST	6613304801

SUBARU

MODEL	ENGINE	AT/MT	CC	YEAR	YEAR	OUTER	O.E No.R	INNER R	O.E No.IR	INNER L	O.E No.IL
ALCYONE SVX											
CXD	EG33	4AT	3300	199109	199310		28021-PA061				
CXW	EG33	4AT	3300	199109	199410		28021-PA061				
ALCYONE											
AX4	EA82	MT/AT	1800	198707	199109		23221-GA820				
AX7 4WD	EA82	MT/AT	1800	198707	199109	SB-04	23221-GA593				
AX7 4WD	EA82	MT/AT	1800	198707	199109		23221-GA820				
AX4 2/4WD	EA82T TBO	MT/AT	1800	198501	199109	SB-04	23221-GA592				
AX7 2/4WD	EA82T TBO	MT/AT	1800	198501	199109	SB-04	23221-GA373				
AX4	EA82	MT/AT	1800	198707	199109	SB-04	23221-GA593				
AX7 4WD	EA82	MT/AT	1800	198707	199109		23221-GA820				
DOMINGO											
KJ6 4WD	EF10	5MT	1000	198310	198409	SB-16	7232-21501				
KJ6 4WD	EF10	5MT	1000	198410	198412	SB-16	7232-10970				
KJ6 4WD	EF10	5MT	1000	198501	198605	SB-16	7232-10971				
KJ8 4WD	EF12	5MT	1200	198809	199406		7232-21932				
FA7 4WD	EF12	MT/AT	1200	199406	099811	SB-19	28021-TA360				
FA8 4WD	EF12	MT/AT	1200	199406	199811	SB-19	28021-TA360				
EJ8 4WD	EF12	5MT	1200	198605	199405	SB-16	7232-10971				
FORESTER											
SF5	EJ20G	5MT	2000	199702	200202	SB-07	28021-AC130	SBIU-1001	28092-AA000	SBIU-1001	28092-AA000
SF5	EJ20G	4AT	2000	199702	200202		28021-AC 150				
IMPREZA											
GC1	EJ15	5MT	1500	199409	199509	SB-07	28021-AA491	SBIU-1001	28092-AA000	SBIU-1001	28092-AA000
GC1	EJ15	4AT	1500	199211	199509	SB-07	28021-AA541	SBIU-1001	28092-AA000	SBIU-1001	28092-AA000
GC1	EJ15	MT/AT	1500	199510	200008	SB-07	28021-AC130	SBIU-1001	28092-AA000	SBIU-1001	28092-AA000
GC2	EJ15	MT/AT	1500	199609	199808	SB-07	28021-AC130	SBIU-1001	28092-AA000	SBIU-1001	28092-AA000
GF1	EJ15	5MT	1500	199409	199509	SB-07	28021-AA491	SBIU-1001	28092-AA000	SBIU-1001	28092-AA000
GF1	EJ15	4AT	1500	199409	199509	SB-07	28021-AA541	SBIU-1001	28092-AA000	SBIU-1001	28092-AA000
GF1	EJ15	MT/AT	1500	199510	200008	SB-07	28021-AC130	SBIU-1001	28092-AA000	SBIU-1001	28092-AA000
GC1	EJ15	MT	1500	199211	199408	SB-07	28021-AA481	SBIU-1001	28092-AA000	SBIU-1001	28092-AA000
GG3	EJ15	MT/AT	1500	200008			28321-FE040				
GG2	EJ15	MT/AT	1500	200008			28321-FE040				
GC4 4WD	EJ16	5MT	1600	199211	199509	SB-07	28021-AA491	SBIU-1001	28092-AA000	SBIU-1001	28092-AA000
GC4 4WD	EJ16	4AT	1600	199211	199509	SB-07	28021-AA541	SBIU-1001	28092-AA000	SBIU-1001	28092-AA000
GC4 4WD	EJ16	MT/AT	1600	199510	199608	SB-07	28021-AC130	SBIU-1001	28092-AA000	SBIU-1001	28092-AA000
GF3	EJ16	5MT	1600	199409	199509	SB-07	28021-AA491	SBIU-1001	28092-AA000	SBIU-1001	28092-AA000
GF3	EJ16	4AT	1600	199211	199509	SB-07	28021-AA541	SBIU-1001	28092-AA000	SBIU-1001	28092-AA000
GF3	EJ16	MT/AT	1600	199510	199608	SB-07	28021-AC130	SBIU-1001	28092-AA000	SBIU-1001	28092-AA000
GF4 4WD	EJ16	5MT	1600	199211	199509	SB-07	28021-AA491	SBIU-1001	28092-AA000	SBIU-1001	28092-AA000
GF4 4WD	EJ16	4AT	1600	199211	199509	SB-07	28021-AA541	SBIU-1001	28092-AA000	SBIU-1001	28092-AA000
GF4 4WD	EJ16	MT/AT	1600	199510	199608	SB-07	28021-AC130	SBIU-1001	28092-AA000	SBIU-1001	28092-AA000
GF3	EJ16	MT	1600	199211	199408	SB-07	28021-AA481	SBIU-1001	28092-AA000	SBIU-1001	28092-AA000
GC6 4WD	EJ18	5MT	1800	199211	199509	SB-07	28021-AA491	SBIU-1001	28092-AA000	SBIU-1001	28092-AA000
GC6 4WD	EJ18	4AT	1800	199211	199509	SB-07	28021-AA541	SBIU-1001	28092-AA000	SBIU-1001	28092-AA000
GC6 4WD	EJ18	MT/AT	1800	199510	199608	SB-07	28021-AC130	SBIU-1001	28092-AA000	SBIU-1001	28092-AA000
GF6 4WD	EJ18	5MT	1800	199211	199509	SB-07	28021-AA491	SBIU-1001	28092-AA000	SBIU-1001	28092-AA000
GF6 4WD	EJ18	4AT	1800	199211	199509	SB-07	28021-AA541	SBIU-1001	28092-AA000	SBIU-1001	28092-AA000
GF6 4WD	EJ18	MT/AT	1800	199510	200008	SB-07	28021-AC130	SBIU-1001	28092-AA000	SBIU-1001	28092-AA000
GFA 4WD	EJ18	5MT	1800	199211	199408	SB-07	28021-AA491	SBIU-1001	28092-AA000	SBIU-1001	28092-AA000
GFA 4WD	EJ18	4AT	1800	199211	199408	SB-07	28021-AA541	SBIU-1001	28092-AA000	SBIU-1001	28092-AA000
GC8	EJ20	5MT	2000	199211	199509	SB-07	28021-AC130	SBIU-1001	28092-AA000	SBIU-1001	28092-AA000
GC8	EJ20	4AT	2000	199211	199509		28021-AC150				
GC8	EJ20 TBO	5MT	2000	199211	199509	SB-08	28021-FA110	SBIU-1002	28093-AC040	SBIU-1002	28093-AC040
GC8	EJ20 TBO	5MT	2000	199510	200008	SB-07	28021-AC130	SBIU-1001	28092-AA000	SBIU-1001	28092-AA000
GC8	EJ20 TBO	4AT	2000	199211	199509	SB-07	28021-AA541	SBIU-1001	28092-AA000	SBIU-1001	28092-AA000
GF8 4WD	EJ20	MT/AT	2000	199310	199608	SB-07	28021-AC130	SBIU-1001	28092-AA000	SBIU-1001	28092-AA000
GF8 4WD	EJ20	4AT	2000	199609	200008		28021-AC 150				
GF8 4WD	EJ20 TBO	5MT	2000	199310	199509	SB-08	28021-FA110	SBIU-1002	28093-AC040	SBIU-1002	28093-AC040
GF8 4WD	EJ20 TBO	4AT	2000	199310	199509	SB-07	28021-AA541	SBIU-1001	28092-AA000	SBIU-1001	28092-AA000
GF8 4WD	EJ20 TBO	MT/AT	2000	199510	199608	SB-07	28021-AC130	SBIU-1001	28092-AA000	SBIU-1001	28092-AA000
GF8 4WD	EJ20 TBO	4AT	2000	199609	200008		28021-AC 150				
GC8 4WD	EJ20	MT	2000	199211	199509	SB-08	28021-FA110	SBIU-1002	28093-AC040	SBIU-1002	28093-AC040
GD9	EJ20	MT/AT	2000	200008			28321-FE060				
GDA	EJ20 TBO	5MT	2000	200008			28321-FE090				
GDA	EJ20 TBO	4AT	2000	200008			28321-FE060				
GG9	EJ20	MT/AT	2000	200008			28321-FE040				
GGA	EJ20 TBO	5MT	2000	200008			28321-FE080				
GGA	EJ20 TBO	4AT	2000	200008			28321-FE040				
GC8 4WD	EJ207	MT	2000	199801		SB-26	28021-AC210				
GC8 4WD	EJ207	MT	2000	199801		SB-26A44	28021-AC200				
GF8	EJ20G	MT/AT	2000	199701	199912	SB-26	28021-AC280				
GF8	EJ20G	MT/AT	2000	199701	199912	SB-26	28021-AC281				
GF8	EJ20G	MT/AT	2000	199701	199912	SB-26	28091-AC091				
GF8	EJ20G	MT/AT	2000	199701	199912	SB-26	28093-AC030				
GF8 4WD	EJ207	MT	2000	199801		SB-26	28091-AC130				
GF8 4WD	EJ207	MT	2000	199801		SB-26	28093-AC040				
GF8 4WD	EJ207	MT	2000	199801		SB-26A44	28091-AC120				
GF8 4WD	EJ207	MT	2000	199801		SB-26A44	28093-AC040				
JUSTY											
KA5	EF10	5MT	1000	198402	198408	SB-10	7232-10720				
KA5	EF10	5MT	1000	198402	198408	SB-10	7232-91130				

SUBARU

MODEL	ENGINE	AT/MT	CC	YEAR	YEAR	OUTER	O.E No.R	INNER R	O.E No.IR	INNER L	O.E No.IL
KA5	EF10	ECVT	1000	198409	198810	SB-25	7232-10952				
KA5	EF10	ECVT	1000	198409	198810	SB-25	7232-10962				
KA6 4WD	EF10	5MT	1000	198409	198810	SB-23	7232-21891				
KA6 4WD	EF10	5MT	1000	198409	198810	SB-23	7232-91490				
KA8	EF12	MT/AT	1200	198811	199403	SB-12	7232-21971				
KA7	EF12	ECVT	1200	198811	199402	SB-12	7232-21971				
KA7	EF12	ECVT	1200	198811	199402	SB-12	7232-91530				
KA8 4WD	EF12	5MT	1200	198511	198701	SB-24	7232-20020				
KA8 4WD	EF12	5MT	1200	198511	198701	SB-24	7232-91341				
KA8 4WD	EF12	5MT	1200	198702	198810	SB-23	7232-20041				
KA8 4WD	EF12	5MT	1200	198702	198810	SB-23	7232-91470				
KA8 4WD	EF12	ECVT	1200	198811	199402	SB-12	7232-21971				
KA8 4WD	EF12	ECVT	1200	198811	199402	SB-12	7232-91530				
LEGACY											
BC2	EJ18	5MT	1800	198902	199109	SB-08	28021-AA501	SBIU-1002	28093-AC040	SBIU-1002	28093-AC040
BC2	EJ18	5MT	1800	199208	199309	SB-07	28021-AA481	SBIU-1001	28092-AA000	SBIU-1001	28092-AA000
BC2	EJ18	4AT	1800	198902	199109	SB-08	28021-AA551	SBIU-1002	28093-AC040	SBIU-1002	28093-AC040
BC2	EJ18	4AT	1800	199110	199309	SB-07	28021-AA541	SBIU-1001	28092-AA000	SBIU-1001	28092-AA000
BC3 4WD	EJ18	5MT	1800	198902	199309	SB-08	28021-AA511	SBIU-1002	28093-AC040	SBIU-1002	28093-AC040
BC3 4WD	EJ18	4AT	1800	198902	199309	SB-07	28021-AA541	SBIU-1001	28092-AA000	SBIU-1001	28092-AA000
BF3	EJ18	5MT	1800	198902	199309	SB-07	28021-AA491	SBIU-1001	28092-AA000	SBIU-1001	28092-AA000
BF3	EJ18	5MT	1800	198902	199309	SB-08	28021-AA511	SBIU-1002	28093-AC040	SBIU-1002	28093-AC040
BF3	EJ18	4AT	1800	198902	199309	SB-07	28021-AA541				
BD2	EJ18	5MT	1800	199406	199507	SB-08	28021-AA511	SBIU-1002	28093-AC040	SBIU-1002	28093-AC040
BD2	EJ18	4AT	1800	199406	199507	SB-07	28021-AA541	SBIU-1001	28092-AA000	SBIU-1001	28092-AA000
BD2	EJ18	MT/AT	1800	199508		SB-07	28021-AC130	SBIU-1001	28092-AA000	SBIU-1001	28092-AA000
BD3 4WD	EJ18	5MT	1800	199406	199507	SB-07	28021-AA491	SBIU-1001	28092-AA000	SBIU-1001	28092-AA000
BD3 4WD	EJ18	4AT	1800	199406	199507	SB-07	28021-AA541	SBIU-1001	28092-AA000	SBIU-1001	28092-AA000
BD3 4WD	EJ18	MT/AT	1800	199508		SB-07	28021-AC130	SBIU-1001	28092-AA000	SBIU-1001	28092-AA000
BG3	EJ18	5MT	1800	199406	199507	SB-07	28021-AA491	SBIU-1001	28092-AA000	SBIU-1001	28092-AA000
BG3	EJ18	4AT	1800	199406	199507	SB-07	28021-AA541	SBIU-1001	28092-AA000	SBIU-1001	28092-AA000
BG3	EJ18	MT/AT	1800	199508		SB-07	28021-AC130	SBIU-1001	28092-AA000	SBIU-1001	28092-AA000
BC2	EJ18	MT/AT	1800	198902	199309	SB-08	28021-AA021	SBIU-1002	28093-AC040	SBIU-1002	28093-AC040
BC2	EJ18	MT/AT	1800	198902	199309	SB-08	28021-AA022	SBIU-1002	28093-AC040	SBIU-1002	28093-AC040
BC2	EJ18	MT/AT	1800	198902	199309	SB-07	28021-AA130	SBIU-1001	28092-AA000	SBIU-1001	28092-AA000
BC2	EJ18	MT/AT	1800	198902	199309	SB-07	28021-AA131	SBIU-1001	28092-AA000	SBIU-1001	28092-AA000
BC2	EJ18	MT/AT	1800	198902	199309	SB-07	28021-AA132	SBIU-1001	28092-AA000	SBIU-1001	28092-AA000
BC2	EJ18	MT	1800	199110	199309	SB-07	28021-AA003	SBIU-1001	28092-AA000	SBIU-1001	28092-AA000
BC2	EJ18	AT	1800	199110	199309	SB-07	28021-AA162	SBIU-1001	28092-AA000	SBIU-1001	28092-AA000
BC3 4WD	EJ18	MT	1800	198902	199309	SB-08	28021-AA031	SBIU-1002	28093-AC040	SBIU-1002	28093-AC040
BF3 4WD	EJ18	MT	1800	198902	199309	SB-08	28021-AA032	SBIU-1002	28093-AC040	SBIU-1002	28093-AC040
BF3 4WD	EJ18	MT	1800	198902	199309	SB-08	28021-AA033	SBIU-1002	28093-AC040	SBIU-1002	28093-AC040
BC3 4WD	EJ18	AT	1800	198902	199309	SB-07	28021-AA011	SBIU-1001	28092-AA000	SBIU-1001	28092-AA000
BC3 4WD	EJ18	AT	1800	198902	199309	SB-07	28021-AA013	SBIU-1001	28092-AA000	SBIU-1001	28092-AA000
BF3 4WD	EJ18	AT	1800	198902	199309	SB-07	28021-AA160	SBIU-1001	28092-AA000	SBIU-1001	28092-AA000
BF3 4WD	EJ18	AT	1800	198902	199309	SB-07	28021-AA161	SBIU-1001	28092-AA000	SBIU-1001	28092-AA000
BF3 4WD	EJ18	AT	1800	198902	199309	SB-07	28021-AA162	SBIU-1001	28092-AA000	SBIU-1001	28092-AA000
BG3	EJ18	MT/AT	1800	199508		SB-07	28021-AC130	SBIU-1001	28092-AA000	SBIU-1001	28092-AA000
BG3	EJ18	4AT	1800	199406	199507	SB-07	28021-AA541	SBIU-1001	28092-AA000	SBIU-1001	28092-AA000
BC4	EJ20	5MT	2000	198902	199309	SB-09	28021-AA530				
BC4	EJ20	4AT	2000	198902	199303	SB-09	28021-AA560				
BC4	EJ20	4AT	2000	199304	199309	SB-08	28021-AA551	SBIU-1002	28093-AC040	SBIU-1002	28093-AC040
BC5 4WD	EJ20	5MT	2000	198902	199109	SB-08	28021-AA511	SBIU-1002	28093-AC040	SBIU-1002	28093-AC040
BC5 4WD	EJ20	5MT	2000	199110	199309	SB-07	28021-AA491				
BC5 4WD	EJ20	4AT	2000	198902	199005	SB-08	28021-AA551	SBIU-1002	28093-AC040	SBIU-1002	28093-AC040
BC5 4WD	EJ20	4AT	2000	199006	199309	SB-07	28021-AA541	SBIU-1001	28092-AA000	SBIU-1001	28092-AA000
BC5 4WD	EJ20 TBO	5MT	2000	199110	199309	SB-07	28021-AA491	SBIU-1001	28092-AA000	SBIU-1001	28092-AA000
BC5 4WD	EJ20 TBO	MT/AT	2000	198902	199109	SB-08	28021-AA551	SBIU-1002	28093-AC040	SBIU-1002	28093-AC040
BC5 4WD	EJ20 TBO	4AT	2000	199110	199309	SB-07	28021-AA541	SBIU-1001	28092-AA000	SBIU-1001	28092-AA000
BCA 4WD	EJ20	5MT	2000	199005	199309	SB-08	28021-AA511	SBIU-1002	28093-AC040	SBIU-1002	28093-AC040
BCA 4WD	EJ20	4AT	2000	199005	199309	SB-08	28021-AA551	SBIU-1002	28093-AC040	SBIU-1002	28093-AC040
BCA 4WD	EJ20	4AT	2000	199006	199309	SB-07	28021-AA541	SBIU-1001	28092-AA000	SBIU-1001	28092-AA000
BF4	EJ20	4AT	2000	199206	199303	SB-09	28021-AA560				
BF4	EJ20	4AT	2000	199304	199309	SB-08	28021-AA551	SBIU-1002	28093-AC040	SBIU-1002	28093-AC040
BF5 4WD	EJ20	5MT	2000	198902	199109	SB-08	28021-AA511	SBIU-1002	28093-AC040	SBIU-1002	28093-AC040
BF5 4WD	EJ20	5MT	2000	199110	199309	SB-07	28021-AA491	SBIU-1001	28092-AA000	SBIU-1001	28092-AA000
BF5 4WD	EJ20	4AT	2000	198902	199005	SB-08	28021-AA551	SBIU-1002	28093-AC040	SBIU-1002	28093-AC040
BF5 4WD	EJ20	4AT	2000	199006	199309	SB-07	28021-AA541	SBIU-1001	28092-AA000	SBIU-1001	28092-AA000
BF5 4WD	EJ20 TBO	5MT	2000	198902	199109	SB-08	28021-AA511	SBIU-1002	28093-AC040	SBIU-1002	28093-AC040
BF5 4WD	EJ20 TBO	5MT	2000	199110	199309	SB-07	28021-AA491	SBIU-1001	28092-AA000	SBIU-1001	28092-AA000
BF5 4WD	EJ20 TBO	4AT	2000	198902	199109	SB-08	28021-AA551	SBIU-1002	28093-AC040	SBIU-1002	28093-AC040
BF5 4WD	EJ20 TBO	4AT	2000	199110	199309	SB-07	28021-AA541	SBIU-1001	28092-AA000	SBIU-1001	28092-AA000
BFA 4WD	EJ20	5MT	2000	198902	199109	SB-08	28021-AA511	SBIU-1002	28093-AC040	SBIU-1002	28093-AC040
BFA 4WD	EJ20	5MT	2000	199110	199309	SB-07	28021-AA491	SBIU-1001	28092-AA000	SBIU-1001	28092-AA000
BFA 4WD	EJ20	4AT	2000	198902	199005	SB-08	28021-AA551	SBIU-1002	28093-AC040	SBIU-1002	28093-AC040
BFA 4WD	EJ20	4AT	2000	199006	199309	SB-07	28021-AA541	SBIU-1001	28092-AA000	SBIU-1001	28092-AA000
BD4	EJ20	5MT	2000	199310	199507	SB-08	28021-AA511	SBIU-1002	28093-AC040	SBIU-1002	28093-AC040
BD4	EJ20	4AT	2000	199310	199507	SB-08	28021-AA551	SBIU-1002	28093-AC040	SBIU-1002	28093-AC040
BD4	EJ20	MT/AT	2000	199508	199812	SB-07	28021-AC130	SBIU-1001	28092-AA000	SBIU-1001	28092-AA000
BD4 REAR	EJ20	MT/AT	2000	199508	199812	SBR-01	28121-AC121				
BD5 4WD	EJ20	5MT	2000	199310	199507	SB-07	28021-AA491	SBIU-1001	28092-AA000	SBIU-1001	28092-AA000
BD5 4WD	EJ20	MT/AT	2000	199508	199812	SB-07	28021-AC130	SBIU-1001	28092-AA000	SBIU-1001	28092-AA000
BD5 4WD	EJ20	4AT	2000	199310	199507	SB-07	28021-AA541	SBIU-1001	28092-AA000	SBIU-1001	28092-AA000

SUBARU

MODEL	ENGINE	AT/MT	CC	YEAR	YEAR	OUTER	O.E No.R	INNER R	O.E No.IR	INNER L	O.E No.IL
BD5 4WD RWD	EJ20	4AT	2000	199310	199507	SBR-01	28121-AC121				
BD5 4WD	EJ20	4AT	2000	199606	199812		28021-AC150				
BD5 4WD	EJ20 TBO	5MT	2000	199310	199507	SB-07	28021-AA491	SBIU-1001	28092-AA000	SBIU-1001	28092-AA000
BD5 4WD	EJ20 TBO	5MT	2000	199508	199605	SB-07	28021-AC130	SBIU-1001	28092-AA000	SBIU-1001	28092-AA000
BD5 4WD	EJ20 TBO	4AT	2000	199310	199507	SB-07	28021-AC090	SBIU-1001	28092-AA000	SBIU-1001	28092-AA000
BD5 4WD	EJ20 TBO	4AT	2000	199508	199605	SB-07	28021-AC140	SBIU-1001	28092-AA000	SBIU-1001	28092-AA000
BD5 4WD	EJ20 TBO	MT/AT	2000	199606	199812		28021-AC150				
BG4	EJ20	5MT	2000	199310	199507	SB-08	28021-AA511	SBIU-1002	28093-AC040	SBIU-1002	28093-AC040
BG4	EJ20	4AT	2000	199310	199507	SB-08	28021-AA551	SBIU-1002	28093-AC040	SBIU-1002	28093-AC040
BG4	EJ20	4AT	2000	199310	199507	SB-07	28021-AA541	SBIU-1001	28092-AA000	SBIU-1001	28092-AA000
BG4	EJ20	MT/AT	2000	199508	199806	SB-07	28021-AC130	SBIU-1001	28092-AA000	SBIU-1001	28092-AA000
BG4 RWD	EJ20	MT/AT	2000	199508	199806	SBR-01	28121-AC121				
BG5 4WD	EJ20	5MT	2000	199310	199507	SB-07	28021-AA491	SBIU-1001	28092-AA000	SBIU-1001	28092-AA000
BG5 4WD	EJ20	MT/AT	2000	199508	199806	SB-07	28021-AC130	SBIU-1001	28092-AA000	SBIU-1001	28092-AA000
BG5 4WD	EJ20	4AT	2000	199310	199507	SB-07	28021-AA541	SBIU-1001	28092-AA000	SBIU-1001	28092-AA000
BG5 4WD	EJ20	4AT	2000	199606	199806		28021-AC150				
BG5 4WD	EJ20 TBO	5MT	2000	199310	199507	SB-07	28021-AA491	SBIU-1001	28092-AA000	SBIU-1001	28092-AA000
BG5 4WD	EJ20 TBO	5MT	2000	199508	199605	SB-07	28021-AC130	SBIU-1001	28092-AA000	SBIU-1001	28092-AA000
BG5 4WD	EJ20 TBO	4AT	2000	199310	199507	SB-07	28021-AC090	SBIU-1001	28092-AA000	SBIU-1001	28092-AA000
BG5 4WD	EJ20 TBO	4AT	2000	199508	199605	SB-07	28021-AC140	SBIU-1001	28092-AA000	SBIU-1001	28092-AA000
BG5 4WD	EJ20 TBO	MT/AT	2000	199606	199806		28021-AC150				
BGA	EJ20	4AT	2000	199310	199507	SB-07	28021-AA541	SBIU-1001	28092-AA000	SBIU-1001	28092-AA000
BGA	EJ20	4AT	2000	199508	199605	SB-07	28021-AC130	SBIU-1001	28092-AA000	SBIU-1001	28092-AA000
BGA	EJ20	4AT	2000	199606			28021-AC150				
BC4	EJ20	MT/AT	2000	198902	199309	SB-09	28021-AA051				
BC4	EJ20	MT/AT	2000	198902	199309	SB-09	28021-AA052				
BC4	EJ20	MT/AT	2000	198902	199309	SB-09	28021-AA053				
BC4	EJ20	MT/AT	2000	198902	199309	SB-09	28021-AA150				
BC4	EJ20	MT/AT	2000	198902	199309	SB-09	28021-AA151				
BC4	EJ20	MT/AT	2000	198902	199309	SB-09	28021-AA152				
BC4 REAR	EJ20	MT/AT	2000	198902	199309	SBR-01	28121-AC121				
BC5 4WD	EJ20	MT/AT	2000	198902	199309	SB-08	28021-AA031	SBIU-1002	28093-AC040	SBIU-1002	28093-AC040
BC5 4WD	EJ20	MT/AT	2000	198902	199309	SB-08	28021-AA032	SBIU-1002	28093-AC040	SBIU-1002	28093-AC040
BC5 4WD	EJ20	MT/AT	2000	198902	199309	SB-08	28021-AA033	SBIU-1002	28093-AC040	SBIU-1002	28093-AC040
BF5 4WD	EJ20	MT/AT	2000	198902	199309	SB-07	28021-AA130	SBIU-1001	28092-AA000	SBIU-1001	28092-AA000
BF5 4WD	EJ20	MT/AT	2000	198902	199309	SB-07	28021-AA131	SBIU-1001	28092-AA000	SBIU-1001	28092-AA000
BF5 4WD	EJ20	MT/AT	2000	198902	199309	SB-07	28021-AA132	SBIU-1001	28092-AA000	SBIU-1001	28092-AA000
BD5 4WD	EJ20	AT	2000	199310	199507	SB-07	28021-AC090	SBIU-1001	28092-AA000	SBIU-1001	28092-AA000
BG5 4WD	EJ20	AT	2000	199310	199507	SB-07	28021-AC090	SBIU-1001	28092-AA000	SBIU-1001	28092-AA000
BD5 4WD	EJ20	MT/AT	2000	199508	199812	SB-07	28021-AC130	SBIU-1001	28092-AA000	SBIU-1001	28092-AA000
BD5 4WD RWD	EJ20	MT/AT	2000	199508	199812	SBR-01	28121-AC121				
BH5	EJ201	MT/AT	2000	199806			28021-AC280				
BH5	EJ204	MT/AT	2000	199806			28021-AC280				
BH5	EJ206	4AT	2000	199806			28021-AC280				
BH5	EJ208	5MT	2000	199806			28321 -AE000				
BE5	EJ20	MT/AT	2000	199812	199904		28021-AC281				
BE5	EJ20	MT/AT	2000	199905	200004		28021-AC200				
BE5	EJ20 TBO	4AT	2000	199812	199904		28021-AC281				
BE5	EJ20 TBO	4AT	2000	199905			28021-AC200				
BE5	EJ20 TBO	5MT	2000	199812	199904		28321-AE001				
BE5	EJ20 TBO	5MT	2000	199905			28321-AE010				
BE5 REAR	EJ20 TBO	AT/MT	2001	199906		SBR-01	28121-AC121				
BF7 4WD	EJ22	4AT	2200	199206	199309	SB-07	28021-AA541	SBIU-1001	28092-AA000	SBIU-1001	28092-AA000
BFB	EJ22	4AT	2200	199206	199309	SB-07	28021-AA541	SBIU-1001	28092-AA000	SBIU-1001	28092-AA000
BG7 4WD	EJ22	4AT	2200	199310	199507	SB-07	28021-AC090	SBIU-1001	28092-AA000	SBIU-1001	28092-AA000
BG7 4WD	EJ22	4AT	2200	199508		SB-07	28021-AC140	SBIU-1001	28092-AA000	SBIU-1001	28092-AA000
BGB	EJ22	4AT	2200	199310	199507	SB-07	28021-AA541	SBIU-1001	28092-AA000	SBIU-1001	28092-AA000
BGB	EJ22	4AT	2200	199508	199605	SB-07	28021-AC130	SBIU-1001	28092-AA000	SBIU-1001	28092-AA000
BD9 4WD	EJ25 TBO	4AT	2500	199410	199507	SB-07	28021-AC090	SBIU-1001	28092-AA000	SBIU-1001	28092-AA000
BD9 4WD	EJ25 TBO	4AT	2500	199508	199605	SB-07	28021-AC140	SBIU-1001	28092-AA000	SBIU-1001	28092-AA000
BD9 4WD	EJ25 TBO	4AT	2500	199606	199812		28021-AC 150				
BG9 4WD	EJ25	4AT	2500	199410	199507	SB-07	28021-AC090	SBIU-1001	28092-AA000	SBIU-1001	28092-AA000
BG9 4WD	EJ25	4AT	2500	199508	199605	SB-07	28021-AC140	SBIU-1001	28092-AA000	SBIU-1001	28092-AA000
BG9 4WD	EJ25	4AT	2500	199606	199806		28021-AC150				
BGC 4WD	EJ25	4AT	2500	199410	199507	SB-07	28021-AC090	SBIU-1001	28092-AA000	SBIU-1001	28092-AA000
BGC 4WD	EJ25	4AT	2500	199508	199605	SB-07	28021-AC140	SBIU-1001	28092-AA000	SBIU-1001	28092-AA000
BGC 4WD	EJ25	4AT	2500	199606	199806		28021-AC150				
BD9 4WD	EJ25	AT	2500	199410	199507	SB-07	28021-AC090	SBIU-1001	28092-AA000	SBIU-1001	28092-AA000
BH9	EJ254	4AT	2500	199806			28021-AC280				
BH9	EJ254	4AT	2500	199806			28021-AC280				
BH9	EJ254	5MT	2500	199806			28021-FC030				
BH9	EJ25	4AT	2500	200105			28021-AC200				
BH9	EZ30	4AT	3000	200005			28021-AC200				
BH9 REAR	EJ25	4AT	2500	200105		SBR-01	28121-AC121				

LEONE

AF1/2	EA65	MT/AT	1300	197901	198401	SB-02	7232-21055				
A22/A67	EA63 2/4W	MT/AT	1400	-	197901	SB-03	6232-02480				
AA2	EA71	MT/AT	1600	198407	199403	SB-05	23221-GA244				
AA2	EA71	MT/AT	1600	198407	199403	SB-06	23221-GA234				
AA3 4WD	EA71	MT/AT	1600	198407	199403	SB-05	23221-GA244				
AA3 4WD	EA71	MT/AT	1600	198407	199403	SB-06	23221-GA234				
AP2	EA71	MT/AT	1600	198410	199403	SB-05	23221-GA244				
AP2	EA71	MT/AT	1600	198410	199403	SB-06	23221-GA234				

SUBARU

MODEL	ENGINE	AT/MT	CC	YEAR	YEAR	OUTER	O.E No.R	INNER R	O.E No.IR	INNER L	O.E No.IL
AP3 4WD	EA71	5MT	1600	198410	199403	SB-05	23221-GA244				
AP3 4WD	EA71	5MT	1600	198410	199403	SB-06	23221-GA234				
A34	EA64	MT/AT	1600	-	197901	SB-03	6232-00200				
A34	EA64	MT/AT	1600	-	197901	SB-03	6232-00201				
A32	EA63	MT/AT	1600	197701	197901	SB-02	6232-02570				
A33	EA63	MT/AT	1600	197701	197901	SB-02	6232-02570				
A62	EA64	MT/AT	1600	197701	197901	SB-02	6232-02570				
AM2/AM1	EA71	MT/AT	1600	197901	198401	SB-02	7232-21055				
AA2/AP2	EA71	MT/AT	1600	198401	199201	SB-05	23221-GA242				
AA2/AP2	EA71	MT/AT	1600	198401	199201	SB-05	23221-GA243				
AF3/AM3 4WD	EA71	MT/AT	1600	197901	198401	SB-01	7232-21392				
AA3/AL3 4WD	EA71	MT/AT	1600	198401	199201	SB-06	23221-GA232				
AA3/AL3 4WD	EA71	MT/AT	1600	198401	199201	SB-06	23221-GA233				
AA4	EA82	MT/AT	1800	198407	198901	SB-05	23221-GA244				
AA4	EA82	MT/AT	1800	198407	198901	SB-06	23221-GA234				
AA5 4WD	EA82 TBO	3AT	1800	198407	198901	SB-04	23221-GA593				
AA5 4WD	EA82 TBO	5MT	1800	198407	198901	SB-04	23221-GA373				
AA5 4WD	EA82	MT/AT	1800	198407	198901	SB-05	23221-GA244				
AA5 4WD	EA82	MT/AT	1800	198407	198901	SB-06	23221-GA234				
AA7 4WD	EA82	MT/AT	1800	198407	198901	SB-04	23221-GA593				
AA7 4WD	EA82	5MT	1800	198407	198709	SB-04	23221-GA373				
AG6 4WD	EA82	5MT	1800	198604	198901	SB-06	23221-GA233				
AP5	EA82	5MT	1800	198510	198901	SB-05	23221-GA244				
AP5	EA82	5MT	1800	198510	198901	SB-06	23221-GA234				
AL5	EA82	MT/AT	1800	198410	198901	SB-05	23221-GA244				
AL5	EA82	MT/AT	1800	198410	198901	SB-06	23221-GA234				
AL5	EA82 TBO	3AT	1800	198410	198901	SB-04	23221-GA593				
AL5	EA82 TBO	5MT	1800	198410	198901	SB-04	23221-GA373				
AL7 4WD	EA82	5MT	1800	198410	198709	SB-04	23221-GA373				
A67	EA71	MT/AT	1800	-	197901	SB-03	6232-02563				
A65	EA71	MT/AT	1800	197701	197901	SB-02	6232-02570				
AM2/AB4	EA81	MT/AT	1800	197901	198401	SB-02	7232-21055				
AA4	EA82	MT/AT	1800	198401	199201	SB-05	23221-GA242				
AA4	EA82	MT/AT	1800	198401	199201	SB-05	23221-GA243				
AF AB5 4WD	EA81	MT/AT	1800	197901	198401	SB-01	7232-21392				
AM AJ5 4WD	EA81	MT/AT	1800	197901	198401	SB-01	7232-21392				
AA AL5 4WD	EA82 TBO	MT/AT	1800	198401	198901	SB-04	23221-GA592				
AA AL5 4WD	EA82 TBO	MT/AT	1800	198401	198901	SB-04	23221-GA593				
AL7AG6 4WD	EA82 TBO	MT/AT	1800	198401	198901	SB-04	23221-GA592				
AL7AG6 4WD	EA82 TBO	MT/AT	1800	198401	198901	SB-04	23221-GA593				
PLEO											
RA1	EN07	CVT	660	199810		SB-19	28321-KE060				
RA1	EN07	5MT	660	199810		SB-19	28321-KE000				
RA2 4WD	EN07	MT/CVT	660	199810		SB-19	28321-KE060				
RA1 /2	EN07 SPC	CVT	660	199810		SB-18	28321-KE040				
RA1 /2 4WD	EN07 SPC	CVT	660	199810		SB-18	28321-KE040				
RV1	EN07	CVT	660	199801		SB-19	28321-KE060				
RV1	EN07	5MT	660	199810		SB-19	28321-KE000				
RV2 4WD	EN07	MT/CVT	660	199810		SB-19	28321-KE060				
RA1	EN07	CVT	660	199810		SB-19	28391-KE020				
RA1	EN07	5MT	660	199810		SB-19	28391-KE000				
RA1 /2	EN07 SPC	CVT	660	199810		SB-18	28391-KE040				
RA1 /2 4WD	EN07 SPC	CVT	660	199810		SB-18	28391-KE040				
RA2 4WD	EN07	MT/CVT	660	199810		SB-19	28391-KE020				
RV1	EN07	CVT	660	199810		SB-19	28391-KE020				
RV1	EN07	5MT	660	199810		SB-19	28391-KE000				
RV2 4WD	EN07	MT/CVT	660	199810		SB-19	28391-KE020				
REX											
KN1	EK23	4MT	550	198611	198906	SB-15	28021-KA341				
KN1	EK23	5MT	550	198611	198906	SB-15	28021-KA082				
KN1	EK23	2AT	550	198611	198906	SB-15	28021-KA202				
KN1	EK23	3AT	550	198611	198906	SB-15	28021-KA002				
KN1	EK23 SPC	MT/AT	550	198803	198906	SB-10	28021-KA231				
KN2 4WD	EK23	5MT	550	198611	198906	SB-15	28021-KA082				
KG1	EK23	4MT	550	198611	198906	SB-15	28021-KA341				
KG1	EK23	5MT	550	198611	198906	SB-15	28021-KA082				
KG1	EK23	2AT	550	198611	198906	SB-15	28021-KA202				
KG1	EK23	3AT	550	198611	198906	SB-15	28021-KA002				
KG1	EK23 SPC	MT/AT	550	198803	198906	SB-10	28021-KA231				
KG2 4WD	EK23	5MT	550	198702	198906	SB-15	28021-KA082				
KH1	EN05	CVT	550	198906	199003	SB-21	28021-KA300				
KH1	EN05	4MT	550	198906	199003	SB-17	28021-KA260				
KH1	EN05 SPC	MT/CVT	550	198906	199003	SB-16	28021-KA440				
KH2 4WD	EN05	5MT	550	198906	199003	SB-17	28021-KA280				
KH2 4WD	EN05 SPC	MT/CVT	550	198906	199003	SB-16	28021-KA440				
KP1	EN05	4MT	550	198906	199003	SB-17	28021-KA260				
KP1	EN05	CVT	550	198906	199003	SB-21	28021-KA300				
KP1	EN05 SPC	MT/CVT	550	198906	199003	SB-16	28021-KA440				
KP2 4WD	EN05	5MT	550	198906	199003	SB-17	28021-KA280				
KP2 4WD	EN05	5MT	550	198906	199003	SB-17	28021-KA280				
KH3	EN07	CVT	660	199003	199203	SB-21	28021-KA520				
KH3	EN07	CVT	660	199003	199005	SB-21	28021-KA520				
KH3	EN07	CVT	660	199005	199203	SB-17	28021-KA540				

SUBARU

MODEL	ENGINE	AT/MT	CC	YEAR	YEAR	OUTER	O.E No.R	INNER R	O.E No.IR	INNER L	O.E No.IL
KH3	EN07	MT	660	199003	199203	SB-17	28021-KA500				
KH3	EN07 SPC	MT/CVT	660	199003	199203	SB-16	28021-KA570				
KH4 4WD	EN07	MT/CVT	660	199003	199203	SB-17	28021-KA560				
KH4 4WD	EN07 SPC	MT/CVT	660	199003	199203	SB-16	28021-KA570				
KP3	EN07	5MT	660	199003	199203	SB-17	28021-KA500				
KP3	EN07	CVT	660	199003	199005	SB-21	28021-KA520				
KP3	EN07	CVT	660	199005	199203	SB-17	28021-KA540				
TRIBECA B9											
W10	EZ30	AT/MT	3000	200411		SB-TRC	28393-XA00A		28392-XA00A		28392-XA00A

SUZUKI

MODEL	ENGINE	AT/MT	CC	YEAR	YEAR	OUTER	O.E No.R	INNER R	O.E No.IR	INNER L	O.E No.IL
AERIO (Indonesic)											
RH415	E12	MT	1500	200210		SZ-29A42	44101-54G50				
RH415	E12	AT	1500	200210		SZ-29A42	44101-55G00	SZIU-LN	44117-55G00	SZIU-LN	44117-55G00
CULTUS/BALENO											
SA310	G10	MT	1000	198401	198601	SZ-01	44101-82020				
SA310	G10	MT	1000	198401	198601	SZ-01	44101-82021				
SA310	G10	AT	1000	198401	198601	SZ-01	44101-82313				
AA44	G10	MT	1000	198801		SZ-04	44101-60B30				
AB44	G10	MT/AT	1000	198801		SZ-04	44101-62B12				
AA44	G10	AT	1000	198801		SZ-04	44101-60B20				
AB44	G10	AT	1000	198801		SZ-04	44101-62B22				
AA44	G10	5MT	1000	198809		SZ-04	44101-62B12				
AA44	G10	AT	1000	198809	199007	SZ-04	44101-62B10				
AB44	G10	AT	1000	198809	199007	SZ-04	44101-62B10				
AA44	G10	AT	1000	199007	199107	SZ-04	44101-60B42				
AB44	G10	AT	1000	199007	199107	SZ-04	44101-60B42				
SA410	G13A	MT	1300	198401	198601	SZ-01	44101-82611				
AA33	G13A	MT/AT	1300	198601	198801	SZ-01	44101-86041				
AA53	G13A	MT/AT	1300	198601	198801	SZ-01	44101-86041				
AB33	G13B	MT/AT	1300	198601	198801	SZ-01	44101-86041				
AB53	G13B	MT/AT	1300	198601	198801	SZ-01	44101-86041				
AA34S	G13B	AT	1300	198801		SZ-04	44101-63B20				
AA34S	G13B	MT	1300	198801		SZ-04	44101-63B10				
AA34S	G13B	5MT	1300	198809	199007	SZ-04	44101-63B11				
AA34S	G13B	5MT	1300	198809	199007	SZ-027	44101-64B12				
AA34S	G13B	AT	1300	198809	199007	SZ-04	44101-63B21				
AA34S	G13B	AT	1300	198809	199007	SZ-027	44101-64B20				
AB34S	G13B	AT	1300	198809	199007	SZ-04	44101-63B21				
AB34S	G13B	5MT	1300	198809	199007	SZ-04	44101-63B11				
AF34S 4WD	G13B	5MT	1300	198910	199007		44101-63B52				
AF34S 4WD	G13B	5MT	1300	198910	199007		44101-71C12				
AK34S	G13B	MT	1300	199201		SZ-04	44101-63B11				
AK34S	G13B	MT	1300	199201		SZ-027	44101-64B12				
AK34S	G13B	AT	1300	199201			44101-64B91				
GA11S	G13B	5MT	1300	199501	199805	SZ-19	44101-60GB0				
GA11S	G13B	5MT	1300	199501	199805	SZ-19	44101-60G00				
GA11S	G13B	5MT	1300	199501	199805	SZ-19	44101-60G01				
GA11S	G13B	5MT	1300	199501	199805	SZ-19	44101-60G01				
GA11S	G13B	3AT	1300	199501	199805	SZ-19	44101-60GH0				
GA11S	G13B	3AT	1300	199501	199805	SZ-19	44101-60G10				
GA11S	G13B	CVT	1300	199501	199805	SZ-19	44101-60GN0				
GA11S	G13B	CVT	1300	199501	199805	SZ-19	44101-60G90				
GA11S	G13B	5MT	1300	199501	200207	SZ-19	44101-60GB0				
GA11S	G13B	5MT	1300	199501	200207	SZ-19A42	44101-60G01				
GA11S	G13B	3AT	1300	199501	200207	SZ-19	44101-60GH0				
GA11S	G13B	3AT	1300	199501	200207	SZ-19A42	44101-60G10				
GA11S	G13B	3AT	1300	199501	200207	SZ-19	44101-60GH0				
GA11S	G13B	3AT	1300	199501	200207	SZ-19A42	44101-60G10				
GA11S	G13B	CVT	1300	199610	200207	SZ-19	44101-60GN0				
GA11S	G13B	CVT	1300	199610	200207	SZ-19A42	44101-60G90				
GA11S	G13B	CVT	1300	199610	200207	SZ-19	44101-60GN0				
AH64S	G15A	MT	1500	199107			44101-71C32				
AH64S	G15A	AT	1500	199107			44101-71C43				
AJ64S 4WD	G15A	MT	1500	199107			44101-71C32				
GA21S	G15A	5MT	1500	199501	199805	SZ-801	44101-60G20				
GA21S	G15A	5MT	1500	199501	199805	SZ-801	44101-60G22				
GA21S	G15A	5MT	1500	199501	199805	SZ-801	44101-60G22/3				
GA21S	G15A	4AT	1500	199501	199805	SZ-801	44101-60G50				
GA21S	G15A	4AT	1500	199501	199805	SZ-801	44101-60G51				
GA21S	G15A	4AT	1500	199501	199805	SZ-802A42	44101-60G52				
GA21S	G15A	4AT	1500	199501	199805	SZ-802A42	44101-60G52				
GB21S 4WD	GA15A	5MT	1500	199501	199805	SZ-19	44101-60G60				
GC21S	G15A	5MT	1500	199501	199805	SZ-801	44101-60G20				
GC21S	G15A	5MT	1500	199501	199805	SZ-801	44101-60G22/3				
GC21S	G15A	4AT	1500	199501	199805	SZ-801	44101-60G50				
GC21S	G15A	4AT	1500	199501	199805	SZ-802A42	44101-60G52				
GC21S	G15A	5MT	1500	199501	199805	SZ-801	44101-60G22				
GC21S	G15A	5MT	1500	199501	199805	SZ-801	44101-60G23				
GC21S	G15A	4AT	1500	199501	199805	SZ-801	44101-60G51				
GD21S4WD	G15A	5MT	1500	199501	199805	SZ-19	44101-60G60				

SUZUKI

MODEL	ENGINE	AT/MT	CC	YEAR	YEAR	OUTER	O.E No.R	INNER R	O.E No.IR	INNER L	O.E No.IL
GA21S	G15A	5MT	1500	199501	199602	SZ-18A42	44101-60G20				
GA21S	G15A	5MT	1500	199501	199602	SZ-18A42	44101-60G22				
GA21S	G15A	5MT	1500	199501	199602	SZ-18A42	44101-60G23				
GA21S	G15A	4AT	1500	199501	199602	SZ-18A42	44101-60G50				
GA21S	G15A	4AT	1500	199501	199602	SZ-18A42	44101-60G51				
GA21S	G15A	4AT	1500	199501	199602	SZ-802A42	44101-60G52				
GB21S 4WD	G15A	5MT	1500	199501	199602	SZ-18A42	44101-60G60				
GC21S	G15A	5MT	1500	199501	200207	SZ-18A42	44101-60G20				
GC21S	G15A	5MT	1500	199501	200207	SZ-19A42	44101-60G22				
GC21S	G15A	5MT	1500	199501	200207	SZ-18A42	44101-60G23				
GC21S	G15A	4AT	1500	199501	200207	SZ-18A42	44101-60G50				
GC21S	G15A	4AT	1500	199501	200207	SZ-18A42	44101-60G51				
GC21S	G15A	4AT	1500	199501	200207	SZ-802A42	44101-60G52				
GD21S 4WD	G15A	5MT	1500	199501	199602	SZ-18A42	44101-60G60				
GC21W	G15A	5MT	1500	199602		SZ-801	44101-60G22				
GC21W	G15A	5MT	1500	199602		SZ-801	44101-60G23				
GC21W	G15A	4AT	1500	199602		SZ-801	44101-60G51				
GC21W	G15A	5MT	1500	199602	200207	SZ-19A42	44101-60G22				
GC21W	G15A	5MT	1500	199602	200207	SZ-19A42	44101-60G22				
GC21W	G15A	5MT	1500	199602	200207	SZ-18A42	44101-60G23				
GC21W	G15A	4AT	1500	199602	200207	SZ-18A42	44101-60G51				
GC21W	G15A	4AT	1500	199602	200207	SZ-802A42	44101-60G52				
AH14S	G16A	MT	1600	198801			44101-71C30				
AH14S	G16A	MT	1600	198801			44101-71C31				
AH14S	G16A	AT	1600	198801			44101-71C40				
AH14S	G16A	AT	1600	198801			44101-71C41				
AH14S	G16A	MT	1600	198906	199107		44101-71C32				
AH14S	G16A	AT	1600	198906	199107		44101-71C43				
AJ14S 4WD	G16A	MT	1600	198910	199107		44101-71C32				
GB31S 4WD	G16A	5MT	1600	199501	199805	SZ-19	44101-60G60				
GD31S 4WD	G16A	5MT	1600	199501	199805	SZ-19	44101-60G61				
GD31S 4WD	G16A	5MT	1600	199501	199805	SZ-19	44101-60G62				
GD31S 4WD	G16A	4AT	1600	199501	199805	SZ-801	44101-60G31				
GD31S 4WD	G16A	4AT	1600	199501	199805	SZ-801	44101-60G32				
GD31S 4WD	G16A	4AT	1600	199501	199805	SZ-801	44101-60G33				
GB31S 4WD	G16A	4AT	1600	199501	199805	SZ-801	44101-60G31				
GB31S 4WD	G16A	4AT	1600	199501	199805	SZ-801	44101-60G33				
GD31W 4WD	G16A	5MT	1600	199602	199805	SZ-19	44101-60G60				
GD31W 4WD	G16A	5MT	1600	199602	199805	SZ-19	44101-60G62				
GD31W 4WD	G16A	4AT	1600	199602	199805	SZ-801	44101-60G31				
GD31W 4WD	G16A	4AT	1600	199602	199805	SZ-801	44101-60G33				
DG31S 4WD	G16A	5MT	1600	199602	200207	SZ-18A42	44101-60G60				
GB31S 4WD	G16A	4AT	1600	199602	200207	SZ-18A42	44101-60G33				
GB31S 4WD	G16A	4AT	1600	199602	200207	SZ-18A42	44101-60G31				
GB31S 4WD	G16A	5MT	1600	199602	200207	SZ-18A42	44101-60G62				
GB31S 4WD	G16A	5MT	1600	199602	200207	SZ-18A42	44101-60G70				
GD31S 4WD	G16A	5MT	1600	199602	200207	SZ-18A42	44101-60G62				
GD31S 4WD	G16A	4AT	1600	199602	200207	SZ-18A42	44101-60G31				
GD31S 4WD	G16A	4AT	1600	199602	200207	SZ-18A42	44101-60G33				
GD31S 4WD	G16A	4AT	1600	199802	200207	SZ-802A42	44101-60G61				
ESCUDO/VITARA											
TA01	G16A	MT/AT	1600	198805	199008	SZ-12	44101-60A10				
TD01	G16A	MT/AT	1600	199009	199108	SZ-12	44101-60A20				
TD02	G16A	MT/AT	1600	199711		SZ-11	44101-77E10				
TA02	G16A	MT/AT	1600	199711		SZ-11	44101-77E10				
TA11W	H20A	MT/AT	2000	199412	199711	SZ-11	44101-77E01				
TD11W	H20A	MT/AT	2000	199412	199711	SZ-11	44101-77E01				
TA31W	RF TBO	4AT	2000	199412	199711	SZ-11	44101-77E01				
TD31W	RF TBO	4AT	2000	199412	199711	SZ-11	44101-77E01				
TD52	J20A	4AT	2000	199711		SZ-11	44101-77E10				
TA52	J20A	4AT	2000	199711		SZ-11	44101-77E10				
GRAND ESCUDO XL-7											
TX92W 4WD	H27A	4AT	2700	200012	200612	SZ-33	44101-54J01		44114-54J01		44115-54J00
GRAND VITARA											
FT,GT			2000	199906		SZ-GVT	44101-65DA3				
JB627	M16A	AT/MT	1600	200501		SZ-GV2	44117-65J00	SZIR-GV	44114-65J00	SZIL-GV	44115-65J00
JB627	J20A	AT/MT	2000	200501		SZ-GV2	44117-65J00	SZIR-GV	44114-65J00	SZIL-GV	44115-65J00
JB627	J24B	AT/MT	2400	200501		SZ-GV2	44117-65J00	SZIR-GV	44114-65J00	SZIL-GV	44115-65J00
JB627	N32A	AT/MT	3200	200501		SZ-GV2	44117-65J00	SZIR-GV	44114-65J00	SZIL-GV	44115-65J00

SUZUKI

MODEL	ENGINE	AT/MT	CC	YEAR	YEAR	OUTER	O.E No.R	INNER R	O.E No.IR	INNER L	O.E No.IL
GA21S	G15A	5MT	1500	199501	199602	SZ-18A42	44101-60G20				
GA21S	G15A	5MT	1500	199501	199602	SZ-18A42	44101-60G22				
GA21S	G15A	5MT	1500	199501	199602	SZ-18A42	44101-60G23				
GA21S	G15A	4AT	1500	199501	199602	SZ-18A42	44101-60G50				
GA21S	G15A	4AT	1500	199501	199602	SZ-18A42	44101-60G51				
GA21S	G15A	4AT	1500	199501	199602	SZ-802A42	44101-60G52				
GB21S 4WD	G15A	5MT	1500	199501	199602	SZ-18A42	44101-60G60				
GC21S	G15A	5MT	1500	199501	200207	SZ-18A42	44101-60G20				
GC21S	G15A	5MT	1500	199501	200207	SZ-19A42	44101-60G22				
GC21S	G15A	5MT	1500	199501	200207	SZ-18A42	44101-60G23				
GC21S	G15A	4AT	1500	199501	200207	SZ-18A42	44101-60G50				
GC21S	G15A	4AT	1500	199501	200207	SZ-18A42	44101-60G51				
GC21S	G15A	4AT	1500	199501	200207	SZ-802A42	44101-60G52				
GD21S 4WD	G15A	5MT	1500	199501	199602	SZ-18A42	44101-60G60				
GC21W	G15A	5MT	1500	199602		SZ-801	44101-60G22				
GC21W	G15A	5MT	1500	199602		SZ-801	44101-60G23				
GC21W	G15A	4AT	1500	199602		SZ-801	44101-60G51				
GC21W	G15A	5MT	1500	199602	200207	SZ-19A42	44101-60G22				
GC21W	G15A	5MT	1500	199602	200207	SZ-19A42	44101-60G22				
GC21W	G15A	5MT	1500	199602	200207	SZ-18A42	44101-60G23				
GC21W	G15A	4AT	1500	199602	200207	SZ-18A42	44101-60G51				
GC21W	G15A	4AT	1500	199602	200207	SZ-802A42	44101-60G52				
AH14S	G16A	MT	1600	198801			44101-71C30				
AH14S	G16A	MT	1600	198801			44101-71C31				
AH14S	G16A	AT	1600	198801			44101-71C40				
AH14S	G16A	AT	1600	198801			44101-71C41				
AH14S	G16A	MT	1600	198906	199107		44101-71C32				
AH14S	G16A	AT	1600	198906	199107		44101-71C43				
AJ14S 4WD	G16A	MT	1600	198910	199107		44101-71C32				
GB31S 4WD	G16A	5MT	1600	199501	199805	SZ-19	44101-60G60				
GD31S 4WD	G16A	5MT	1600	199501	199805	SZ-19	44101-60G61				
GD31S 4WD	G16A	5MT	1600	199501	199805	SZ-19	44101-60G62				
GD31S 4WD	G16A	4AT	1600	199501	199805	SZ-801	44101-60G31				
GD31S 4WD	G16A	4AT	1600	199501	199805	SZ-801	44101-60G32				
GD31S 4WD	G16A	4AT	1600	199501	199805	SZ-801	44101-60G33				
GB31S 4WD	G16A	4AT	1600	199501	199805	SZ-801	44101-60G31				
GB31S 4WD	G16A	4AT	1600	199501	199805	SZ-801	44101-60G33				
GD31W 4WD	G16A	5MT	1600	199602	199805	SZ-19	44101-60G60				
GD31W 4WD	G16A	5MT	1600	199602	199805	SZ-19	44101-60G62				
GD31W 4WD	G16A	4AT	1600	199602	199805	SZ-801	44101-60G31				
GD31W 4WD	G16A	4AT	1600	199602	199805	SZ-801	44101-60G33				
DG31S 4WD	G16A	5MT	1600	199602	200207	SZ-18A42	44101-60G60				
GB31S 4WD	G16A	4AT	1600	199602	200207	SZ-18A42	44101-60G33				
GB31S 4WD	G16A	4AT	1600	199602	200207	SZ-18A42	44101-60G31				
GB31S 4WD	G16A	5MT	1600	199602	200207	SZ-18A42	44101-60G62				
GB31S 4WD	G16A	5MT	1600	199602	200207	SZ-18A42	44101-60G70				
GD31S 4WD	G16A	5MT	1600	199602	200207	SZ-18A42	44101-60G62				
GD31S 4WD	G16A	4AT	1600	199602	200207	SZ-18A42	44101-60G31				
GD31S 4WD	G16A	4AT	1600	199602	200207	SZ-18A42	44101-60G33				
GD31S 4WD	G16A	4AT	1600	199802	200207	SZ-802A42	44101-60G61				
ESCUDO/VITARA											
TA01	G16A	MT/AT	1600	198805	199008	SZ-12	44101-60A10				
TD01	G16A	MT/AT	1600	199009	199108	SZ-12	44101-60A20				
TD02	G16A	MT/AT	1600	199711		SZ-11	44101-77E10				
TA02	G16A	MT/AT	1600	199711		SZ-11	44101-77E10				
TA11W	H20A	MT/AT	2000	199412	199711	SZ-11	44101-77E01				
TD11W	H20A	MT/AT	2000	199412	199711	SZ-11	44101-77E01				
TA31W	RF TBO	4AT	2000	199412	199711	SZ-11	44101-77E01				
TD31W	RF TBO	4AT	2000	199412	199711	SZ-11	44101-77E01				
TD52	J20A	4AT	2000	199711		SZ-11	44101-77E10				
TA52	J20A	4AT	2000	199711		SZ-11	44101-77E10				
GRAND ESCUDO XL-7											
TX92W 4WD	H27A	4AT	2700	200012	200612	SZ-33	44101-54J01		44114-54J01		44115-54J00
GRAND VITARA											
FT,GT			2000	199906		SZ-GVT	44101-65DA3				
JB627	M16A	AT/MT	1600	200501		SZ-GV2	44117-65J00	SZIR-GV	44114-65J00	SZIL-GV	44115-65J00
JB627	J20A	AT/MT	2000	200501		SZ-GV2	44117-65J00	SZIR-GV	44114-65J00	SZIL-GV	44115-65J00
JB627	J24B	AT/MT	2400	200501		SZ-GV2	44117-65J00	SZIR-GV	44114-65J00	SZIL-GV	44115-65J00
JB627	N32A	AT/MT	3200	200501		SZ-GV2	44117-65J00	SZIR-GV	44114-65J00	SZIL-GV	44115-65J00

SUZUKI

MODEL	ENGINE	AT/MT	CC	YEAR	YEAR	OUTER	O.E No.R	INNER R	O.E No.IR	INNER L	O.E No.IL
GRAND VITARA XL-7											
JA627	H27A	4AT	2700	200101	200612	SZ-33	44101-54J01		44114-54J01		44115-54J00
LIANA/AERIO											
RH413/416 2WD	E12	MT	1500	200210		SZ-29A42	44101-54G50		44117-54G10		44117-54G20
RH413/416 2WD	E12	AT	1500	200210		SZ-29A42	44101-55G00	SZIU-LN	44117-55G00	SZIU-LN	44117-55G00
RH413/416 4WD	E12	MT	1500	200210		SZ-29A42	44101-54G50		44117-54G10		44117-54G00
RH413/416 4WD	E12	AT	1500	200210		SZ-29A42	44101-55G10	SZIU-LN	44117-55G00		44117-60G72
RH416 2WD	E12	AT	1500	200210		SZ-29A42	44101-55G00	SZIU-LN	44117-55G02	SZIU-LN	44117-55G02
RH416 4WD	E12	AT	1500	200210		SZ-29A42	44101-55G10	SZIU-LN	44117-55G02		44117-60G72
RH416 4WD	E12	MT	1500	200210		SZ-29A42	44101-54G50		44117-54G10		44117-54G00
SWIFT											
HT51S	M13A	4AT/F	1300	200001		SZ-17A43	44101-80G10				
HT51S	M13A	4AT/F	1300	200001		SZ-17A43	44101-80G11				
HT51S	M13A	5MT/F	1300	200001		SZ-17A43	44101-80G00				
HT51S	M13A	4AT/F	1300	200001		SZ-17A43	44101-80G10				
HT51S	M13A	4AT/F	1300	200001		SZ-17A43	44101-80G11				
HT51S 4WD	M13A	4AT/F	1300	200001		SZ-17A43	44101-80G20				
HT51S 4WD	M13A	4AT/F	1300	200001		SZ-17A43	44101-80G20				
HT51S 4WD	M13A	4AT/F	1300	200001		SZ-17A43	44101-80G20				
HT51S 4WD	M13A	5MT/F	1300	200001		SZ-17A43	44101-80G20				
HT51S	M13A	4AT	1300	200002	200104	SZ-17A43	44101-80G10				
HT51S4WD	M13A	4AT	1300	200002	200104	SZ-17A43	44101-80G20				
HT51S	M13A	5MT	1300	200009		SZ-17A43	44101-80G00				
HT51S4WD	M13A	5MT	1300	200009		SZ-17A43	44101-80G20				
HT51S	M13A	4AT	1300	200104		SZ-17A43	44101-80G10				
HT51S4WD	M13A	4AT	1300	200104		SZ-17A43	44101-80G20				
ZC11S	M13A	4AT/F	1300	200411		SZ-30A43	44101-63J10				
ZC11S	M13A	5MT/F	1300	200411		SZ-30A43	44101-63J00				
ZD11S 4WD	M13A	4AT/F	1300	200411		SZ-30A43	44101-63J80				
ZD11S 4WD	M13A	5MT/F	1300	200411		SZ-30A43	44101-63J80				
HT81S	M15A	5MT/F	1500	200306		SZ-29A43	44101-60J00				
HT81S	M15A	5MT/F	1500	200306		SZ-29A43	44101-60J00				
ZC11S	M15A	4AT/F	1500	200411		SZ-30A43	44101-63J10				
ZD21S 4WD	M15A	4AT/F	1500	200411		SZ-30A43	44101-63J80				
WAGON R PLUS/WAGON R SOLIO											
MA63S	K10A	4AT	1000	199905	200011		44101-78F10				
MA63S	K1OA TBO	4AT	1000	199905	200011		44101-78F10				
MA64S	K10A	4AT	1000	200011			44101-78F10				
MA63S 4WD	K10A	4AT	1000	199905	200011	SZ-17	44101-78F20				
MA63S 4WD	K1 OA TBO	4AT	1000	199905	200011	SZ-17	44101-78F20				
MA64S 4WD	K10A	4AT	1000	200011		SZ-17	44101-78F20				
MA34S	M13A	4AT	1300	200011		SZ-17A43	44101-80G10				
MA34S 4WD	M13A	4AT	1300	200011		SZ-17A43	44101-80G20				
MA61S	K10A	5MT	1000	199702	199805	SZ-17A41	44101-75F02				
MA61S	K10A	5MT	1000	199806	199905	SZ-17	44101-75F20				
MA61S	K10A	4AT	1000	199702	199905	SZ-17A41	44101-75F31				
MB61S 4WD	K10A	5MT	1000	199702	199805	SZ-17A41	44101-75F02				
MB61S 4WD	K10A	5MT	1000	199806	199905	SZ-17	44101-75F52				
MB61S 4WD	K10A	4AT	1000	199706	199905	SZ-17A41	44101-75F51				
MB61S 4WD	K10A	4AT	1000	199706	199905	SZ-17A41	44101-75F52				
AA44	G10	AT	1000	198809	199007	SZ-04	44101-62B10				
AB44	G10	AT	1000	198809	199007	SZ-04	44101-62B10				
AA44	G10	AT	1000	199007	199107	SZ-04	44101-60B42				
AB44	G10	AT	1000	199007	199107	SZ-04	44101-60B42				
SA410	G13A	MT	1300	198401	198601	SZ-01	44101-82611				
AA33	G13A	MT/AT	1300	198601	198801	SZ-01	44101-86041				
AA53	G13A	MT/AT	1300	198601	198801	SZ-01	44101-86041				
AB33	G13B	MT/AT	1300	198601	198801	SZ-01	44101-86041				
AB53	G13B	MT/AT	1300	198601	198801	SZ-01	44101-86041				
AA34S	G13B	AT	1300	198801		SZ-04	44101-63B20				
AA34S	G13B	MT	1300	198801		SZ-04	44101-63B10				
AA34S	G13B	5MT	1300	198809	199007	SZ-04	44101-63B11				
AA34S	G13B	5MT	1300	198809	199007	SZ-027	44101-64B12				
AA34S	G13B	AT	1300	198809	199007	SZ-04	44101-63B21				
AA34S	G13B	AT	1300	198809	199007	SZ-027	44101-64B20				
AB34S	G13B	AT	1300	198809	199007	SZ-04	44101-63B21				
AB34S	G13B	5MT	1300	198809	199007	SZ-04	44101-63B11				
AF34S 4WD	G13B	5MT	1300	198910	199007		44101-63B52				
AF34S 4WD	G13B	5MT	1300	198910	199007		44101-71C12				
AK34S	G13B	MT	1300	199201		SZ-04	44101-63B11				

SUZUKI

MODEL	ENGINE	AT/MT	CC	YEAR	YEAR	OUTER	O.E No.R	INNER R	O.E No.IR	INNER L	O.E No.IL
AK34S	G13B	MT	1300	199201		SZ-027	44101-64B12				
AK34S	G13B	AT	1300	199201			44101-64B91				
GA11S	G13B	5MT	1300	199501	199805	SZ-19	44101-60GB0				
GA11S	G13B	5MT	1300	199501	199805	SZ-19	44101-60G00				
GA11S	G13B	5MT	1300	199501	199805	SZ-19	44101-60G01				
GA11S	G13B	5MT	1300	199501	199805	SZ-19	44101-60G01				
GA11S	G13B	3AT	1300	199501	199805	SZ-19	44101-60GH0				
GA11S	G13B	3AT	1300	199501	199805	SZ-19	44101-60G10				
GA11S	G13B	CVT	1300	199501	199805	SZ-19	44101-60GN0				
GA11S	G13B	CVT	1300	199501	199805	SZ-19	44101-60G90				
GA11S	G13B	5MT	1300	199501	200207	SZ-19	44101-60GB0				
GA11S	G13B	5MT	1300	199501	200207	SZ-19A42	44101-60G01				
GA11S	G13B	3AT	1300	199501	200207	SZ-19	44101-60GH0				
GA11S	G13B	3AT	1300	199501	200207	SZ-19A42	44101-60G10				
GA11S	G13B	3AT	1300	199501	200207	SZ-19	44101-60GH0				
GA11S	G13B	3AT	1300	199501	200207	SZ-19A42	44101-60G10				
GA11S	G13B	CVT	1300	199610	200207	SZ-19	44101-60GN0				
GA11S	G13B	CVT	1300	199610	200207	SZ-19A42	44101-60G90				
GA11S	G13B	CVT	1300	199610	200207	SZ-19	44101-60GN0				
AH64S	G15A	MT	1500	199107			44101-71C32				
AH64S	G15A	AT	1500	199107			44101-71C43				
AJ64S 4WD	G15A	MT	1500	199107			44101-71C32				
GA21S	G15A	5MT	1500	199501	199805	SZ-801	44101-60G20				
GA21S	G15A	5MT	1500	199501	199805	SZ-801	44101-60G22				
GA21S	G15A	5MT	1500	199501	199805	SZ-801	44101-60G22/3				
GA21S	G15A	4AT	1500	199501	199805	SZ-801	44101-60G50				
GA21S	G15A	4AT	1500	199501	199805	SZ-801	44101-60G51				
GA21S	G15A	4AT	1500	199501	199805	SZ-802A42	44101-60G52				
GA21S	G15A	4AT	1500	199501	199805	SZ-802A42	44101-60G52				
GB21S 4WD	GA15A	5MT	1500	199501	199805	SZ-19	44101-60G60				
GC21S	G15A	5MT	1500	199501	199805	SZ-801	44101-60G20				
GC21S	G15A	5MT	1500	199501	199805	SZ-801	44101-60G22/3				
GC21S	G15A	4AT	1500	199501	199805	SZ-801	44101-60G50				
GC21S	G15A	4AT	1500	199501	199805	SZ-802A42	44101-60G52				
GC21S	G15A	5MT	1500	199501	199805	SZ-801	44101-60G22				
GC21S	G15A	5MT	1500	199501	199805	SZ-801	44101-60G23				
GC21S	G15A	4AT	1500	199501	199805	SZ-801	44101-60G51				
GD21S4WD	G15A	5MT	1500	199501	199805	SZ-19	44101-60G60				
GA21S	G15A	5MT	1500	199501	199602	SZ-18A42	44101-60G20				
GA21S	G15A	5MT	1500	199501	199602	SZ-18A42	44101-60G22				
GA21S	G15A	5MT	1500	199501	199602	SZ-18A42	44101-60G23				
GA21S	G15A	4AT	1500	199501	199602	SZ-18A42	44101-60G50				
GA21S	G15A	4AT	1500	199501	199602	SZ-18A42	44101-60G51				
GA21S	G15A	4AT	1500	199501	199602	SZ-802A42	44101-60G52				
GB21S 4WD	G15A	5MT	1500	199501	199602	SZ-18A42	44101-60G60				
GC21S	G15A	5MT	1500	199501	200207	SZ-18A42	44101-60G20				
GC21S	G15A	5MT	1500	199501	200207	SZ-19A42	44101-60G22				
GC21S	G15A	5MT	1500	199501	200207	SZ-18A42	44101-60G23				
GC21S	G15A	4AT	1500	199501	200207	SZ-18A42	44101-60G50				
GC21S	G15A	4AT	1500	199501	200207	SZ-18A42	44101-60G51				
GC21S	G15A	4AT	1500	199501	200207	SZ-802A42	44101-60G52				
GD21S 4WD	G15A	5MT	1500	199501	199602	SZ-18A42	44101-60G60				
GC21W	G15A	5MT	1500	199602		SZ-801	44101-60G22				
GC21W	G15A	5MT	1500	199602		SZ-801	44101-60G23				
GC21W	G15A	4AT	1500	199602		SZ-801	44101-60G51				
GC21W	G15A	5MT	1500	199602	200207	SZ-19A42	44101-60G22				
GC21W	G15A	5MT	1500	199602	200207	SZ-19A42	44101-60G22				
GC21W	G15A	5MT	1500	199602	200207	SZ-18A42	44101-60G23				
GC21W	G15A	4AT	1500	199602	200207	SZ-18A42	44101-60G51				
GC21W	G15A	4AT	1500	199602	200207	SZ-802A42	44101-60G52				
AH14S	G16A	MT	1600	198801			44101-71C30				
AH14S	G16A	MT	1600	198801			44101-71C31				
AH14S	G16A	AT	1600	198801			44101-71C40				
AH14S	G16A	AT	1600	198801			44101-71C41				
AH14S	G16A	MT	1600	198906	199107		44101-71C32				
AH14S	G16A	AT	1600	198906	199107		44101-71C43				
AJ14S 4WD	G16A	MT	1600	198910	199107		44101-71C32				
GB31S 4WD	G16A	5MT	1600	199501	199805	SZ-19	44101-60G60				
GD31S 4WD	G16A	5MT	1600	199501	199805	SZ-19	44101-60G61				
GD31S 4WD	G16A	5MT	1600	199501	199805	SZ-19	44101-60G62				

SUZUKI

MODEL	ENGINE	AT/MT	CC	YEAR	YEAR	OUTER	O.E No.R	INNER R	O.E No.IR	INNER L	O.E No.IL
GD31S 4WD	G16A	4AT	1600	199501	199805	SZ-801	44101-60G31				
GD31S 4WD	G16A	4AT	1600	199501	199805	SZ-801	44101-60G32				
GD31S 4WD	G16A	4AT	1600	199501	199805	SZ-801	44101-60G33				
GB31S 4WD	G16A	4AT	1600	199501	199805	SZ-801	44101-60G31				
GB31S 4WD	G16A	4AT	1600	199501	199805	SZ-801	44101-60G33				
GD31W 4WD	G16A	5MT	1600	199602	199805	SZ-19	44101-60G60				
GD31W 4WD	G16A	5MT	1600	199602	199805	SZ-19	44101-60G62				
GD31W 4WD	G16A	4AT	1600	199602	199805	SZ-801	44101-60G31				
GD31W 4WD	G16A	4AT	1600	199602	199805	SZ-801	44101-60G33				
DG31S 4WD	G16A	5MT	1600	199602	200207	SZ-18A42	44101-60G60				
GB31S 4WD	G16A	4AT	1600	199602	200207	SZ-18A42	44101-60G33				
GB31S 4WD	G16A	4AT	1600	199602	200207	SZ-18A42	44101-60G31				
GB31S 4WD	G16A	5MT	1600	199602	200207	SZ-18A42	44101-60G62				
GB31S 4WD	G16A	5MT	1600	199602	200207	SZ-18A42	44101-60G70				
GD31S 4WD	G16A	5MT	1600	199602	200207	SZ-18A42	44101-60G62				
GD31S 4WD	G16A	4AT	1600	199602	200207	SZ-18A42	44101-60G31				
GD31S 4WD	G16A	4AT	1600	199602	200207	SZ-18A42	44101-60G33				
GD31S 4WD	G16A	4AT	1600	199802	200207	SZ-802A42	44101-60G61				
CULTUS CRESCENT WAGON											
GD31W	G16A	4AT	1600	199602	200207	SZ-18A42	44101-60G31				
GD31W 4WD	G16A	4AT	1600	199602	200207	SZ-18A42	44101-60G31				
GD31W 4WD	G16A	4AT	1600	199602	200207	SZ-18A42	44101-60G33				
GD31W 4WD	G16A	5MT	1600	199612	200207	SZ-18A42	44101-60G62				
GC41W	J18A	5MT	1800	199602	199805	SZ-027	44101-60G42				
GC41W	J18A	4AT	1800	199602	199805	SZ-801	44101-60G70				
GC41W	J18A	5MT	1800	199602	199805	SZ-027	44101-60G42				
GC41W	J18A	5MT	1800	199602	199805	SZ-027	44101-60G43				
GC41W	J18A	5MT	1800	199602	199805	SZ-027	44101-60G44				
GC41W	J18A	4AT	1800	199602	199805	SZ-801	44101-60G70				
GC41W	J18A	4AT	1800	199602	199805	SZ-801	44101-60G72				
GC41W	J18A	4AT	1800	199602	200207	SZ-18A42	44101-60G70				
GC41W	J18A	4AT	1800	199602	200207	SZ-18A42	44101-60G72				
GC41W	J18A	5MT	1800	199602	200207	SZ-027	44101-60G42				
GC41W	J18A	5MT	1800	199602	200207	SZ-027	44101-60G44				
ESCUDO/VITARA											
TA01	G16A	MT/AT	1600	198805	199008	SZ-12	44101-60A10				
TD01	G16A	MT/AT	1600	199009	199108	SZ-12	44101-60A20				
TD02	G16A	MT/AT	1600	199711		SZ-11	44101-77E10				
TA02	G16A	MT/AT	1600	199711		SZ-11	44101-77E10				
TA11W	H20A	MT/AT	2000	199412	199711	SZ-11	44101-77E01				
TD11W	H20A	MT/AT	2000	199412	199711	SZ-11	44101-77E01				
TA31W	RF TBO	4AT	2000	199412	199711	SZ-11	44101-77E01				
TD31W	RF TBO	4AT	2000	199412	199711	SZ-11	44101-77E01				
TD52	J20A	4AT	2000	199711		SZ-11	44101-77E10				
TA52	J20A	4AT	2000	199711		SZ-11	44101-77E10				
EVERY PLUS/EVERY LANDY											
DA32W 4WD	G13B	4AT	1300	199906	200105		44101-79A10				
EVERY											
DB71V4WD	F5A	5MT	550	198503	198708		44101-74D00				
DB71V4WD	F5A	5MT	550	198708	198905		44101-85412				
DB41V 4WD	F5B	5MT	550	198905	199003		44101-74D00				
DB41V 4WD	F5B	5MT	550	198905	199003		44101-85412				
DB51V 4WD	F6A	5MT	660	199003	199109		44101-74D00				
DB51V 4WD	F6A	5MT	660	199003	199109		44101-85412				
DF51V 4WD	F6A	MT/AT	660	199109	199311		44101-51F01				
DF51V 4WD	F6A	MT/AT	660	199311	199505		44101-51F30				
DF51V 4WD	F6A	MT/AT	660	199505	199604		44101-51F40				
DB52V 4WD	F6A /TBO	MT/AT	660	199901			44101-79A10				
DA52W 4WD	F6A /TBO	MT/AT	660	199906			44101-79A10				
FRONTE											
CN11S	F5B	MT	550	198809	198904	SZ-07	44101-70B12				
CN11S	F5B	MT	550	198809	198904	SZ-10	44101-71B10				
CN11S	F5B	AT	550	198809	198904	SZ-03	44101-70B32				
CPUS 4WD	F5B	5MT	550	198809	198904		44101-72B12				
GRAND ESCUDO											
TX92W 4WD	H27A	4AT	2700	200012			44101-67D01				
GRAND VITARA											
FT,GT			2000	199906		SZ-GVT	44101-65DA3				
JB627	M16A	AT/MT	1600	200501		SZ-GV2	44117-65J00	SZIR-GV	44114-65J00	SZIL-GV	44115-65J00
JB627	J20A	AT/MT	2000	200501		SZ-GV2	44117-65J00	SZIR-GV	44114-65J00	SZIL-GV	44115-65J00

SUZUKI

MODEL	ENGINE	AT/MT	CC	YEAR	YEAR	OUTER	O.E No.R	INNER R	O.E No.IR	INNER L	O.E No.IL
JB627	J24B	AT/MT	2400	200501		SZ-GV2	44117-65J00	SZIR-GV	44114-65J00	SZIL-GV	44115-65J00
JB627	N32A	AT/MT	3200	200501		SZ-GV2	44117-65J00	SZIR-GV	44114-65J00	SZIL-GV	44115-65J00
JIMNY/SAMURAI											
SJ30/40	LJ50	MT/AT	550	198101	199001	SZ-08	44101-80000				
SJ30/40	LJ50	MT/AT	550	198101	199001	SZ-08	44101-80001				
SJ410	F5A	MT/AT	550	198101	199001	SZ-08	44101-80000				
SJ410	F5A	MT/AT	550	198101	199001	SZ-08	44101-80001				
JA11	F6A	MT/AT	660	199003	199106	SZ-08	44101-80001				
JA12	F6A	MT/AT	660	199511			44101-80010				
JA22W	K6A	MT/AT	660	199511			44101-80010				
JB23 4WD	K6A	MT/AT	660	199910			44101-81A80				
JA71	F10A	MT/AT	1000	198101	199001	SZ-08	44101-80000				
JA71	F10A	MT/AT	1000	198101	199001	SZ-08	44101-80001				
JIMNY SIERRA/SAMURAI											
JB31W	G13B	MT/AT	1300	199305	199511	SZ-09	44101-83301	SZ-09	44102-83301		
JB32W	G13B	MT/AT	1300	199511	199712		44101-83310		44102-83310		
JIMNY WIDE/SAMURAI											
JA51	G13A	MT/AT	1300	198401	199001	SZ-09	44101-83000				
JB33	G13B	MT/AT	1300	199801			44101-81A00				
KEI											
HN11S	F6A TBO	5MT	660	199810	200010	SZ-17	44101-78G20				
HN11S	F6A TBO	3AT	660	199810	199910	SZ-24	44101-76G60				
HN21S	K6A	5MT	660	199810	199910	SZ-24	44101-76G00				
HN21S	K6A	3AT	660	199810	199910	SZ-24	44101-76G60				
HN21S	K6A TBO	5MT	660	199810	200010	SZ-17	44101-78G20				
HN21S	K6A TBO	4AT	660	199810	200010	SZ-17	44101-78G30				
HN11S	F6A TBO	4AT	660	199910	200010	SZ-17	44101-78G30				
HN11S4WD	F6A TBO	5MT	660	199810	200010	SZ-17	44101-76G70				
HN11S4WD	F6A TBO	3AT	660	199810	199910	SZ-17	44101-76G70				
HN21S4WD	K6A TBO	5MT	660	199810	200010	SZ-17	44101-76G70				
HN21S4WD	K6A TBO	4AT	660	199810	200010	SZ-17	44101-76G70				
HN11S4WD	F6A TBO	4AT	660	199903	200010	SZ-17	44101-76G70				
HN12S	F6A TBO	5MT	660	200104		SZ-17	44101-78G20				
HN12S	F6A TBO	4AT	660	200104		SZ-17	44101-78G30				
HN12S4WD	F6A TBO	5MT	660	200104		SZ-17	44101-76G70				
HN12S4WD	F6A TBO	4AT	660	200104		SZ-17	44101-76G70				
HN21S	K6A	5MT	660	200010	200010		44101-76G01				
HN21S	K6A	4AT	660	200010	200010		44101-76G11				
HN22S	K6A	5MT	660	200104			44101-76G01				
HN22S	K6A	4AT	660	200104			44101-76G11				
HN22S	K6A TBO	5MT	660	200104		SZ-17	44101-78G20				
HN22S	K6A TBO	4AT	660	200104		SZ-17	44101-78G30				
HN22S4WD	K6A TBO	5MT	660	200104		SZ-17	44101-76G70				
HN22S4WD	K6A TBO	4AT	660	200104		SZ-17	44101-76G70				
LIANA/AERIO											
RH413/416 2WD	E12	MT	1500	200210		SZ-29A42	44101-54G50		44117-54G10		44117-54G20
RH413/416 2WD	E12	AT	1500	200210		SZ-29A42	44101-55G00	SZIU-LN	44117-55G00	SZIU-LN	44117-55G00
RH413/416 4WD	E12	MT	1500	200210		SZ-29A42	44101-54G50		44117-54G10		44117-54G00
RH413/416 4WD	E12	AT	1500	200210		SZ-29A42	44101-55G10	SZIU-LN	44117-55G00		44117-60G72
RH416 2WD	E12	AT	1500	200210		SZ-29A42	44101-55G00	SZIU-LN	44117-55G02	SZIU-LN	44117-55G02
RH416 4WD	E12	AT	1500	200210		SZ-29A42	44101-55G10	SZIU-LN	44117-55G02		44117-60G72
RH416 4WD	E12	MT	1500	200210		SZ-29A42	44101-54G50		44117-54G10		44117-54G00
SWIFT											
HT51S	M13A	4AT/F	1300	200001		SZ-17A43	44101-80G10				
HT51S	M13A	4AT/F	1300	200001		SZ-17A43	44101-80G11				
HT51S	M13A	5MT/F	1300	200001		SZ-17A43	44101-80G00				
HT51S	M13A	4AT/F	1300	200001		SZ-17A43	44101-80G10				
HT51S	M13A	4AT/F	1300	200001		SZ-17A43	44101-80G11				
HT51S 4WD	M13A	4AT/F	1300	200001		SZ-17A43	44101-80G20				
HT51S 4WD	M13A	4AT/F	1300	200001		SZ-17A43	44101-80G20				
HT51S 4WD	M13A	4AT/F	1300	200001		SZ-17A43	44101-80G20				
HT51S 4WD	M13A	5MT/F	1300	200001		SZ-17A43	44101-80G20				
HT51S	M13A	4AT	1300	200002	200104	SZ-17A43	44101-80G10				
HT51S4WD	M13A	4AT	1300	200002	200104	SZ-17A43	44101-80G20				
HT51S	M13A	5MT	1300	200009		SZ-17A43	44101-80G00				
HT51S4WD	M13A	5MT	1300	200009		SZ-17A43	44101-80G20				
HT51S	M13A	4AT	1300	200104		SZ-17A43	44101-80G10				
HT51S4WD	M13A	4AT	1300	200104		SZ-17A43	44101-80G20				
ZC11S	M13A	4AT/F	1300	200411		SZ-30A43	44101-63J10				
ZC11S	M13A	5MT/F	1300	200411		SZ-30A43	44101-63J00				

SUZUKI

MODEL	ENGINE	AT/MT	CC	YEAR	YEAR	OUTER	O.E No.R	INNER R	O.E No.IR	INNER L	O.E No.IL
ZD11S 4WD	M13A	4AT/F	1300	200411		SZ-30A43	44101-63J80				
ZD11S 4WD	M13A	5MT/F	1300	200411		SZ-30A43	44101-63J80				
HT81S	M15A	5MT/F	1500	200306		SZ-29A43	44101-60J00				
HT81S	M15A	5MT/F	1500	200306		SZ-29A43	44101-60J00				
ZC11S	M15A	4AT/F	1500	200411		SZ-30A43	44101-63J10				
ZD21S 4WD	M15A	4AT/F	1500	200411		SZ-30A43	44101-63J80				
SWIFT II											
AH	G10B	MT	1000	199604	199911	SZ-20	44101-80E21				
BG7	EJ22E	4AT/F	1000	199604	199911	SZ-22	44101-80E00				
BG8	EJ22E	4AT/F	1000	199604	199911	SZ-22	44101-80E01				
MA	G13B	5MT/F	1300	199604		SZ-20	44101-80E21				
AA34	G13B	5MT/F	1300	199604		SZ-20	44101-80E21				
AH35 4WD	G13B	5MT/F	1300	199604		SZ-20	44101-80E21				
WAGON R WIDE											
MA61	K10A	5MT	1000	199702	199905	SZ-17	44101-75F00				
MA61	K10A	4AT	1000	199702	199905	SZ-17	44101-75F30				
MB61	K10A	5MT	1000	199702	199905	SZ-17	44101-75F00				
MA61	K10A	5MT	1000	199702	199905	SZ-17	44101-75F20				
WAGON R											
CT21S	F6A	AT	660	199309	199810	SZ-10	44101-60DK1				
CT21S	F6A	AT	660	199309	199810	SZ-23	44101-60DK1				
CT21S	F6A	MT	660	199309	199810	SZ-07	44101-60DA1				
CT21S	F6A	MT	660	199309	199810	SZ-10	44101-60DA1				
CT21S	F6A	MT	660	199309	199810	SZ-10	44101-60DA1				
CT21S	F6A	MT	660	199309	199810	SZ-23	44101-60DA1				
CT21S	F6A	MT	660	199309	199810	SZ-14	44101-60DA1				
CT21S	F6A	MT	660	199309	199810	SZ-23	44101-60DA1				
CT21S	F6A TBO	AT	660	199502	199810	SZ-07	44101-62 D01				
CT21S	F6A TBO	AT	660	199502	199810	SZ-07	44101-62 D01				
CT21S	F6A TBO	AT	660	199502	199810	SZ-15	44101-52E00				
CT21S	F6A TBO	MT	660	199502	199810	SZ-01	44101-60DD1				
CT21S	F6A TBO	MT	660	199502	199810	SZ-15	44101-60DE0				
CV21S4WD	F6A	AT	660	199312	199810	SZ-07	44101-62 D01				
CV21S4WD	F6A	AT	660	199312	199810	SZ-07	44101-62 D01				
CV21S4WD	F6A	AT	660	199312	199810	SZ-07	44101-62 D01				
CV21S4WD	F6A	AT	660	199312	199810	SZ-15	44101-52E00				
CV21S4WD	F6A	MT	660	199309	199810	SZ-03	44101-60DC3				
CV21S4WD	F6A	MT	660	199309	199810	SZ-14	44101-60DC3				
CV21S4WD	F6A	MT	660	199309	199810		44101-60D70				
CV21S4WD	F6A	MT	660	199309	199810	SZ-14	44101-60DC3				
CV21S4WD	F6A TBO	AT	660	199502	199810	SZ-07	44101-62 D01				
CV21S4WD	F6A TBO	AT	660	199502	199810	SZ-15	44101-52E00				
CV21S4WD	F6A TBO	AT	660	199502	199810	SZ-15	44101-52E00				
CV21S4WD	F6A TBO	MT	660	199502	199810	SZ-01	44101-60DD1				
CV21S4WD	F6A TBO	MT	660	199502	199810	SZ-15	44101-60DE0				
CT51S	K6A	AT	660	199704	199810	SZ-23	44101-60DK1				
CT51S	K6A	MT	660	199704	199810	SZ-23	44101-60DA1				
CT51S	K6A	MT	660	199704	199810	SZ-14	44101-60DA1				
CT51S	K6A TBO	AT	660	199704	199810	SZ-15	44101-52E00				
CT51S	K6A TBO	MT	660	199704	199810	SZ-15	44101-60DE0				
CV51S4WD	K6A	AT	660	199704	199810	SZ-15	44101-52E00				
CV51S4WD	K6A	AT	660	199701	199810	SZ-15	44101-52E00				
CV51S4WD	K6A	MT	660	199704	199810		44101-60D70				
CV51S4WD	K6A TBO	AT	660	199704	199810	SZ-15	44101-52E00				
CV51S4WD	K6A TBO	AT	660	199704	199810	SZ-15	44101-52E00				
CV51S4WD	K6A TBO	MT	660	199704	199810	SZ-15	44101-60DE0				
MC11S	F6A	AT	660	199810	200012	SZ-17	44101-76G60				
MC11S	F6A	MT	660	199810	200012	SZ-24	44101-76G00				
MC11S	F6A TBO	AT	660	199810	200012	SZ-17	44101-78G30				
MC11S	F6A TBO	MT	660	199810	200012	SZ-17	44101-78G20				
MC11S4WD	F6A	AT	660	199810	19910	SZ-17	44101-76G70				
MC11S4WD	F6A	MT	660	199810	19910	SZ-17	44101-76G70				
MC11S4WD	F6A TBO	3AT	660	199810	19910	SZ-17	44101-76G70				
MC11S4WD	F6A TBO	4MT	660	19910	200012	SZ-17	44101-76G60				
MC11S4WD	F6A TBO	MT	660	199810	200012	SZ-17	44101-76G70				
MC12S	F6A TBO	AT	660	200012	200111	SZ-17	44101-78G30				
MC12S	F6A TBO	MT	660	200012	200111	SZ-17	44101-78G20				
MC12S4WD	F6A TBO	AT	660	200012	200111	SZ-17	44101-76G80				
MC12S4WD	F6A TBO	MT	660	200012	200111	SZ-17	44101-76G70				
MC21S	K6A	AT	660	199812	200012	SZ-24	44101-76G60				

SUZUKI

MODEL	ENGINE	AT/MT	CC	YEAR	YEAR	OUTER	O.E No.R	INNER R	O.E No.IR	INNER L	O.E No.IL
MC21S	K6A	MT	660	199812	199910	SZ-24	44101-76G00				
MC21S	K6A	MT	660	199910	200012	SZ-24	44101-76G01				
MC21S	K6A	CVT	660	199810	200012	SZ-24	44101-76G40				
MC21S	K6A TBO	AT	660	199810	200012	SZ-17	44101-78G30				
MC21S	K6A TBO	MT	660	199810	200012	SZ-17	44101-78G20				
MC21S4WD	K6A	AT	660	199810	200012	SZ-17	44101-76G70				
MC21S4WD	K6A	MT	660	199810	200012	SZ-17	44101-76G70				
MC21S4WD	K6A TBO	AT	660	199810	200012	SZ-17	44101-76G70				
MC21S4WD	K6A TBO	MT	660	199810	200012	SZ-17	44101-76G70				
MC22S	K6A	AT	660	200012		SZ-24	44101-76G61				
MC22S	K6A	CVT	660	200012		SZ-24	44101-76G40				
MC22S	K6A	CVT	660	200012		SZ-24	44101-76G41				
MC22S	K6A	MT	660	200012		SZ-24	44101-76G01				
MC22S	K6A TBO	AT	660	200012		SZ-17	44101-78G30				
MC22S	K6A TBO	MT/HMM	660	200012		SZ-17	44101-78G20				
MC22S 4WD	K6A TBO	AT	660	200012		SZ-17	44101-76G70				
MC22S 4WD	K6A TBO	MT	660	200012		SZ-17	44101-76G70				
WAGON R PLUS/WAGON R SOLIO											
MA63S	K10A	4AT	1000	199905	200011		44101-78F10				
MA63S	K1OA TBO	4AT	1000	199905	200011		44101-78F10				
MA64S	K10A	4AT	1000	200011			44101-78F10				
MA63S 4WD	K10A	4AT	1000	199905	200011	SZ-17	44101-78F20				
MA63S 4WD	K1 OA TBO	4AT	1000	199905	200011	SZ-17	44101-78F20				
MA64S 4WD	K10A	4AT	1000	200011		SZ-17	44101-78F20				
MA34S	M13A	4AT	1300	200011		SZ-17A43	44101-80G10				
MA34S 4WD	M13A	4AT	1300	200011		SZ-17A43	44101-80G20				
MA61S	K10A	5MT	1000	199702	199805	SZ-17A41	44101-75F02				
MA61S	K10A	5MT	1000	199806	199905	SZ-17	44101-75F20				
MA61S	K10A	4AT	1000	199702	199905	SZ-17A41	44101-75F31				
MB61S 4WD	K10A	5MT	1000	199702	199805	SZ-17A41	44101-75F02				
MB61S 4WD	K10A	5MT	1000	199806	199905	SZ-17	44101-75F52				
MB61S 4WD	K10A	4AT	1000	199706	199905	SZ-17A41	44101-75F51				
MB61S 4WD	K10A	4AT	1000	199706	199905	SZ-17A41	44101-75F52				
X-90											
LB11S	G16A	MT/AT	1600	199510		SZ-12	44101-60A20				

TOYOTA

MODEL	ENGINE	AT/MT	CC	YEAR	YEAR	OUTER	O.E No.R	INNER R	O.E No.IR	INNER L	O.E No.IL
ALPHARD											
NH15W 4WD	2AZ-FE	4AT/I	2400	200205		TY-61A48	43410-48050	TYIP-R4	43030-42020	TYID-R4	43040-42020
NH10W	2AZ-FE	4AT/I	2400	200205		TY-909A48	43410-28030			TYIL-911	43040-28010
NH15W 4WD	1MZ-FE	4AT/I	3000	200205			43410-48050	TYIP-R4	43030-42020	TYID-R4	43040-42020
NH10W	1MZ-FE	4AT/I	3000	200205		TY-910A48	43410-58010				
AURIS											
NRE150	1NR-FE	MT/AT	1300	200610		TY-ZZE15	43460-09R20	TYIU-220	43040-02030	TYIU-220	43040-02030
ZZE150	4ZZ-FE	MT/AT	1400	200610		TY-ZZE15	43460-09R20	TYIU-220	43040-02030	TYIU-220	43040-02030
NDE150	1ND-FTV	MT/AT	1400	200610		TY-ZZE15	43460-09R20	TYIU-220	43040-02030	TYIU-220	43040-02030
ZRE151	1ZR-FE	MT/AT	1600	200610			43460-09R30	TYIU-AV18	43040-05110	TYIU-AV18	43040-05110
ZRE152	2ZR-FAE	MT/AT	1800	200610			43470-09S90		43030-05200		43040-05141
ADE150	1AD-FTV	MT/AT	2000	200610			43460-09R30	TYIU-AV18	43040-05110	TYIU-AV18	43040-05110
AVALON											
MCX10	1MZ-FE	AT	3000	199505	200004	TY-28A48	43410-06080	TYIU-5003	43409-06010	TYIU-5003	43409-06010
MCX20	1MZ-FE	4AT	3000	200002			43410-07030		43030-07010		43040-07010
AVENSIS											
AT220	4A-FE	MT	1600	199710	200007	TY-51A48	43460-09270	TYIU-220	43040-05060	TYIU-220	43040-05060
AT220	4A-FE	MT	1600	199710	200007	TY-51A48	43460-09290	TYIU-220	43040-05060	TYIU-220	43040-05060
AT220	4A-FE	MT	1600	199810	200007	TY-51A48	43460-09290	TYIU-110	43403-05030	TYIU-110	43403-05030
ZZT220	3ZZ-FE	MT	1600	200007	200303	TY-A22A48	43410-05270	TYIU-220	43040-05060	TYIU-220	43040-05060
ZZT250	3ZZ-FE	MT	1600	200301			43410-05330	TYIU-220	43040-02030	TYIU-220	43040-02030
AT220	7A-FE	MT/AT	1800	199710	200007	TY-51A48	43460-09270	TYIU-220	43040-05060	TYIU-220	43040-05060
AT220	7A-FE	MT/AT	1800	199710	200007	TY-51A48	43460-09290	TYIU-220	43040-05060	TYIU-220	43040-05060
AT220	7A-FE	MT/AT	1800	199710	200007	TY-51A48	43460-09290	TYIU-220	43040-05060	TYIU-220	43040-05060
AT220	7A-FE	MT/AT	1800	199810	200007	TY-51A48	43460-09290	TYIU-110	43403-05030	TYIU-110	43403-05030
ZZT221	1ZZ-FE	MT	1800	200007	200303		43460-09490				
ZZT221	1ZZ-FE	AT	1800	200007	200303		43460-09500				
ST220	3S-FE	MT/AT	2000	199710	200303		43470-09400	TYIP-ST220	43030-05050	TYID-ST220	43040-05030
AZT-220	1AZ-FSE	MT/AT	2000	200007	200303		43410-05260				
AZT-220	1AZ-FSE	MT/AT	2000	200007	200303		43460-09510				
CT220	2CT	MT	2000	199710	200007		43470-09410				
CT220	2CT	MT	2000	199710	200007		43470-09471				
CT220	2CTE	MT	2000	199710	200007	TY-51	43410-05240				
CT220	2CTE	MT	2000	199710	200007	TY-51	43410-05241				
CDT220	1CD-FTV	MT	2000	200007	200303	TY-56A48	43460-09331				
CDT220	1CD-FTV	MT	2000	200007	200303	TY-56A48	43460-09331				
ZZT250	3ZZ-FE	MT	1600	200201	200812	TY-AV1A48	43470-09N30	TYIU-220	43040-02030	TYIU-220	43040-02030
ZZT251	1ZZ-FE	AT/MT	1800	200201	200812	TY-AV1A48	43470-09N40	TYIU-AV18	43040-05110	TYIU-AV18	43040-05110
AZT250	1AZ-FE	AT/MT	2000	200201	200812	TY-AV2A48	43470-09N90	TYIR-AV20	43030-05120	TYIL-AV20	43040-02050
AZT250	1AZ-FSE	AT/MT	2000	200201	200812	TY-AV2A48	43470-09N90	TYIR-AV20	43030-05120	TYIL-AV20	43040-02050
ADT250	1AD-FTV	MT	2000	200601	200812	TY-AV1A48	43470-09P10	TYIR-AV20	43030-05120	TYIL-AV20	43040-02050
CDT250	1CD-FTV	MT	2000	200303	200604	TY-AV1A48	43470-09A39	TYIR-AV20	43030-05120	TYIL-AV20	43040-02050
ADT251	2AD-FHV	MT	2200	200504	200812		43470-09M20		43030-05200		43040-05141
ADT251	2AD-FTV	MT	2200	200504	200812		43470-09M20		43030-05200		43040-05141
AZT251	1AZ-FSE	AT	2400	200309	200812	TY-AV2A48	43470-09P00	TYIR-AV24	43030-05150	TYIL-AV24	43040-05101
bB											
NCP30	2NZ-FE	4AT	1300	200002		TY-68	43410-52020	TYIU-YAR13	43403-16020	TYIU-YAR13	43403-16020
NCP30	2NZ-FE	4AT	1300	200002		TY-35	43410-52070	TYIU-YAR13	43403-16020	TYIU-YAR13	43403-16020
NCP30	2NZ-FE	4AT	1300	200002		TY-35A48	43460-59045	TYIU-YAR15	43403-10011	TYIU-YAR15	43403-10011
NCP31	1NZ-FE	4AT	1500	200002		TY-35A48	43460-59045	TYIU-YAR15	43403-10011	TYIU-YAR15	43403-10011
NCP31	1NZ-FE	4AT	1500	200002		TY-35	43410-52070	TYIU-YAR15	43403-10011	TYIU-YAR15	43403-10011
NCP34	1NZ-FE	4AT	1500	200106	200303	TY-35	43410-52070	TYIU-YAR15	43403-10011	TYIU-YAR15	43403-10011
NCP35 4WD	1NZ-FE	4AT	1500	200002		TY-35	43410-52030			TYIU-5009	43403-12040
CALDINA											
ET196V	5E-FE	MT/AT	1500	199211	200206	TY-10	43410-20440	TYIU-5009	43403-12040	TYIU-5009	43403-12040
ST190G	4S-FE	MT/AT	1800	199211	199601	TY-09	43410-20540	TYID-5010	43030-32060	TYIP-5001	43040-32040
ST190G	4S-FE	MT/AT	1800	199211	199601	TY-25A48	43410-20580	TYID-5010	43030-32060	TYIP-5001	43040-32040
AT191G	7A-FE	MT/AT	1800	199601	199709	TY-26A48	43410-20450	TYIU-5009	43403-12040	TYIU-5009	43403-12040
AT211	7A-FE	MT/AT	1800	199709		TY-26A48	43410-20451	TYIU-5009	43403-12040	TYIU-5009	43403-12040
ST195G 4WD	3S-GE	MT/AT	2000	199211	199709	TY-09	43410-12400	TYIP-RAV4	43403-12050	TYID-RAV4	43403-12060
ST195G 4WD	3S-GE	MT/AT	2000	199211	199709	TY-25A48	43410-12410	TYIP-RAV4	43403-12050	TYID-RAV4	43403-12060
CT190G	2C	MT/AT	2000	199211	199601	TY-09	43410-20530				
CT190G	2C	MT/AT	2000	199211	199601	TY-25A48	43410-20570				
CT196V	2C	MT/AT	2000	199211	199601	TY-09	43410-20530				
CT198V 4WD	2C	MT	2000	199211	199402	TY-09	43410-32141				
ST191G	3S-FE	4AT	2000	199211	199709	TY-09	43410-20540	TYID-5010	43030-32060	TYIP-5001	43040-32040
ST191G	3S-FE	4AT	2000	199211	199709	TY-25A48	43410-20580	TYID-5010	43030-32060	TYIP-5001	43040-32040
ST195G 4WD	3S-FE	MT/AT	2000	199211	199709	TY-09	43410-12400	TYIP-RAV4	43403-12050	TYID-RAV4	43403-12060
ST195G 4WD	3S-FE	MT/AT	2000	199211	199709	TY-25A48	43410-12410	TYIP-RAV4	43403-12050	TYID-RAV4	43403-12060
CT190G	2C-T	MT/AT	2000	199601	199709	TY-25A48	43410-12350				
CT196V	2C	MT/AT	2000	199601		TY-09	43410-20341				
CT190G	2C-T	MT/AT	2000	199601	199709	TY-25A48	43410-12350				
ST210	3S-FE	4AT	2000	199709		TY-25A48	43410-20580	TYID-5010	43030-32060	TYIP-5001	43040-32040
ST215 4WD	3S-FE	MT/AT	2000	199709	200209		43410-21031	TYIU-GXR	42360-30040	TYIU-GXR	42360-30040
ST215 4WD	3S-GE	4AT	2000	199709	200209		43410-21031	TYIU-GXR	42360-30040	TYIU-GXR	42360-30040
ST215 4WD	3S-GTE	5MT	2000	199709	200209		43410-21011	TYIU-GXR	42360-30040	TYIU-GXR	42360-30040
ST215 4WD	3S-GTE	5MT	2000	199709	200209		43410-21011	TYIU-GXR	42360-30040	TYIU-GXR	42360-30040
ST246 4WD	3S-GTE	4AT	2000	200209			43410-21090	TYIP-R4	43030-42020	TYID-R4	43040-42020
CT216 4WD	3C-TE	4AT	2200	199709			43410-21041				
CAMI											
J100E	HC-EJ	MT/AT	1300	199905	200005		43410-87406				
J102E	K3-VE	MT/AT	1300	200005			43410-87406				
J102ETBO	K3-VET	4AT	1300	200005			43410-87408				

TOYOTA

MODEL	ENGINE	AT/MT	CC	YEAR	YEAR	OUTER	O.E No.R	INNER R	O.E No.IR	INNER L	O.E No.IL
J102E 4WD	K3-VE	MT/AT	1300	200005		DH-12A48	43410-87406				
CAMRY											
ACV30	2AZ-FE	4AT/F	2400	200109	200209	TY-909A48	43410-33240	TYIP-909	43030-33050	TYIL-911	43040-28010
ACV30	2AZ-FE	4AT/F	2400	200210		TY-909A48	43410-33240	TYIP-909	43030-33050	TYIL-911	43040-28010
ACZ35 4WD	2AZ-FE	4AT/F	2400	200109		TY-909A48	43410-33260				
MCV30	1MZ-FE	MT/AT	3000	200110		TY-910A48	43410-33230				
MCV30	1MZ-FE	MT/AT	3000	200110		TY-910A48	43410-33230				
ACV40	2AZ-FE	5MT	2400	200712			43470-09V10		43030-06280		43040-0W010
ACV40 LE	2AZ-FE	5MT	2400	200612		TY-ACV4A48	43470-39545	TYIP-909	43030-33051	TYIL-911	43040-28011
ACV40 LE	2AZ-FE	5AT	2400	200608	200903	TY-ACV4A48	43470-39545		43030-06190		43040-06190
ACV40 LE	2AZ-FE	5AT	2400	200612		TY-ACV4A48	43470-39545	TYIP-909	43030-33051	TYIL-911	43040-28011
ACV40	2AZ-FE	5AT	2400	200712			43470-09V10		43030-06280		43040-0W010
GSV40	2GR-FE	6AT	3500	200601		TY-GSV4A48	43460-09M20		43030-0W040		43040-0W030
ACV40 L RHD	2AZ-FE	MT/AT	2400	200608	200901	TY-ACV4A48	43470-39545		43030-06190		43040-06190
ACV40 J RHD	2AZ-FE	MT/AT	2400	200601		TY-ACV4A48	43470-39545	TYIP-909	43030-33051	TYIL-911	43040-28011
ACV45 RHD	2AZ-FE	MT/AT	2400	200601			43470-49615		43030-28021	TYIL-911	43040-28021
CAMRY GRACIA											
MCV21	2MZ-FE	4AT	2500	199612	200202		43410-06170				
MCV21	2MZ-FE	4AT	2500	199612	200202	TY-13A48	43410-33070				
MCV21	2MZ-FE	4AT	2500	199612	200202	TY-13A48	43410-33201				
MCV21	2MZ-FE	4AT	2500	199612	200202	TY-13A48	43410-33201				
MCV25 4WD	2MZ-FE	4AT	2500	199706	200202	TY-13A48	43410-33120				
SXV20	5S-FE	4AT	2200	199612	200202		43410-06160				
SXV20	5S-FE	4AT	2200	199612	200202	TY-24A48	43410-33020				
SXV25 4WD	5S-FE	4AT	2200	199706	200202		43410-33110				
CAMRY/VISTA											
SV10	1S-LU	MT/AT	1800	198201	198401	TY-09	43410-32010/1				
SV11	2S-ELU	MT/AT	1800	198201	198401	TY-09	43410-32010/1				
CV10	1C-TL	MT/AT	1800	198201	198601	TY-09	43410-32020/1/2				
CV11	1C-TL	MT/AT	1800	198201	198601	TY-09	43410-32020/1/2				
SV10	1S-ILU	MT/AT	1800	198401	198601	TY-09	43410-32030				
SV20	1S-I	MT/AT	1800	198608	198808	TY-09	43410-32040				
SV22	4S-FI	MT/AT	1800	198808	199006	TY-09	43410-32170				
SV30	4S-FE	MT/AT	1800	199007	199101	TY-09	43410-20220				
SV30	4S-FE	MT/AT	1800	199007	199101	TY-09	43410-20230				
SV30	4A-FE	MT/AT	1800	199007	199406	TY-09	43410-20221				
SV30	4A-FE	MT/AT	1800	199007	199406	TY-25A48	43410-20231				
SV30	4S-FE	MT/AT	1800	199007	199406	TY-09	43410-20221				
SV30	4S-FE	MT/AT	1800	199007	199406	TY-25A48	43410-20231				
SV40	4S-FE	MT/AT	1800	199407	199806	TY-09	43410-20221				
SV40	4S-FE	MT/AT	1800	199407	199806	TY-25A48	43410-20231				
ZZV50	1ZZ-FE	4AT	1800	199806			43410-32300				
SV11	2S-ILU	MT/AT	2000	198401	198601	TY-09	43410-32030				
SV21	3S-FE	AT	2000	198608	198909	TY-09	43410-32040				
SV21	3S-FE	MT	2000	198608	198909	TY-09	43410-32060				
SV21	3S-GE	AT	2000	198608	199006	TY-05	43410-32070				
SV21	3S-GE	MT	2000	198608	199006		43410-32080				
CV20	2C-T	AT	2000	198608	198909	TY-09	43410-32040				
CV20	2C-T	MT	2000	198608	198909	TY-05	43410-32070				
VZV20	1VZ-FE	AT	2000	198704	198909	TY-09	43410-32040				
VZV20	1VZ-FE	MT	2000	198704	199006	TY-32	43410-32090				
SV25 4WD	3S-FE	AT	2000	198710	199006	TY-09	43410-32140	TYIP-RAV4	43403-12050	TYID-RAV4	43403-12060
SV25 4WD	3S-FE	MT	2000	198710	199006	TY-12	43410-32130				
SV25 4WD	3S-FE	MT/AT	2000	198710	199006		43410-32110	TYIP-RAV4	43403-12050	TYID-RAV4	43403-12060
SV21	3S-FE	AT	2000	198807	199103	TY-07	43410-03010	TYIP-5014	43030-09010	TYID-5015	43040-09010
SV21	3S-FE	AT	2000	198909	199006	TY-09	43410-32170				
SV21	3S-FE	MT	2000	198909	199006	TY-12	43410-32180	TYIR-5226	43030-33010	TYIU-5006	43040-20020
VZV20	1VZ-FE	AT	2000	198909	199006	TY-09	43410-32160				
CV20	2C-T	MT/AT	2000	198909	199006	TY-12	43410-32180	TYIR-5226	43030-33010	TYIU-5006	43040-20020
SV32	3S-FE	MT	2000	199001	199101	TY-12	43410-20240	TYIR-5226	43030-33010	TYIU-5006	43040-20020
SV33	3S-FE	MT	2000	199001	199101	TY-12	43410-20240	TYIR-5226	43030-33010	TYIU-5006	43040-20020
SV32	3S-FE	AT	2000	199007	199101	TY-09	43410-20220				
SV32	3S-FE	AT	2000	199007	199101	TY-25A48	43410-20230				
SV32	3S-FE	MT	2000	199007	199406	TY-12	43410-20241	TYIR-5226	43030-33010	TYIU-5006	43040-20020
SV32	3S-FE	MT	2000	199007	199406	TY-24A48	43410-20251	TYIR-5226	43030-33010	TYIU-5006	43040-20020
SV32	3S-GE	AT	2000	199007	199101	TY-09	43410-32230				
SV32	3S-GE	AT	2000	199007	199101	TY-25A48	43410-32240				
SV32	3S-GE	MT	2000	199007	199101	TY-09	43410-32250				
SV32	3S-GE	MT	2000	199007	199101	TY-25A48	43410-32260				
SV33 4WD	3S-FE	AT	2000	199007	199101	TY-09	43410-20220				
SV33 4WD	3S-FE	AT	2000	199007	199101	TY-09	43410-20230				
SV33 4WD	3S-FE	MT	2000	199007	199406	TY-12	43410-20241	TYIR-5226	43030-33010	TYIU-5006	43040-20020
SV33 4WD	3S-FE	MT	2000	199007	199406	TY-24A48	43410-20251	TYIR-5226	43030-33010	TYIU-5006	43040-20020
SV33 4WD	3S-GE	AT	2000	199007	199101	TY-09	43410-32230				
SV33 4WD	3S-GE	AT	2000	199007	199101	TY-25A48	43410-32240				
SV33 4WD	3S-GE	MT	2000	199007	199101	TY-09	43410-32250				
SV33 4WD	3S-GE	MT	2000	199007	199101	TY-25A48	43410-32260				
SV35 4WD	3S-FE	MT/AT	2000	199007	199101	TY-09	43410-32140	TYIP-RAV4	43403-12050	TYID-RAV4	43403-12060
SV35 4WD	3S-FE	MT/AT	2000	199007	199101	TY-25A48	43410-32200	TYIP-RAV4	43403-12050	TYID-RAV4	43403-12060
VZV31 4WD	1VZ-FE	AT	2000	199007	199206	TY-32A48	43410-32281				
VZV31 4WD	1VZ-FE	MT	2000	199007	199206	TY-18	43410-32221				
CV30	2C-T	MT/AT	2000	199007	199406	TY-12	43410-32181	TYIR-5226	43030-33010	TYIU-5006	43040-20020
SV32	3S-FE	5MT	2000	199007	199406	TY-18	43410-32211	TYIR-5226	43030-33010	TYIU-5006	43040-20020
SV32	3S-FE	5MT	2000	199007	199406	TY-18	43410-32221	TYIR-5226	43030-33010	TYIU-5006	43040-20020

TOYOTA

MODEL	ENGINE	AT/MT	CC	YEAR	YEAR	OUTER	O.E No.R	INNER R	O.E No.IR	INNER L	O.E No.IL
SV32	3S-FE	AT	2000	199007	199406	TY-32	43410-32271				
SV32	3S-FE	AT	2000	199007	199406	TY-32A48	43410-32281				
SV32	3S-GE	MT/AT	2000	199007	199206	TY-09	43410-32231				
SV32	3S-GE	MT/AT	2000	199007	199206	TY-25A48	43410-32241				
SV33	3S-FE	5MT	2000	199007	199406	TY-18	43410-32211	TYIR-5226	43030-33010	TYIU-5006	43040-20020
SV33	3S-FE	5MT	2000	199007	199406	TY-18	43410-32221	TYIR-5226	43030-33010	TYIU-5006	43040-20020
SV33	3S-FE	AT	2000	199007	199406	TY-32A48	43410-32281				
SV33	3S-GE	5MT	2000	199007	199206	TY-09	43410-32251				
SV33	3S-GE	AT	2000	199007	199206	TY-09	43410-32231				
CV30	2C-T	MT/AT	2000	199007	199406	TY-24A48	43410-32150				
VZV30	1VZ-FE	5MT	2000	199007	199206	TY-18	43410-32211				
VZV30	1VZ-FE	5MT	2000	199007	199206	TY-18	43410-32221				
VZV30	1VZ-FE	AT	2000	199007	199206	TY-32	43410-32271				
VZV30	1VZ-FE	AT	2000	199007	199206	TY-32A48	43410-32281				
VZV31 4WD	1VZ-FE	5MT	2000	199007	199206	TY-18	43410-32211				
VZV31 4WD	1VZ-FE	AT	2000	199007	199206	TY-32	43410-32271				
SV32	3S-GE	MT/AT	2000	199007	199206	TY-09	43410-32251				
SV32	3S-GE	MT/AT	2000	199007	199206	TY-25A48	43410-32261				
SV33	3S-FE	AT	2000	199007	199406	TY-32	43410-32271				
SV35 4WD	3S-FE	MT/AT	2000	199007	199206	TY-09	43410-32141	TYIP-RAV4	43403-12050	TYID-RAV4	43403-12060
SV35 4WD	3S-FE	MT/AT	2000	199007	199206	TY-25A48	43410-32201	TYIP-RAV4	43403-12050	TYID-RAV4	43403-12060
SV32	3S-FE	AT	2000	199101	199406	TY-09	43410-20221				
SV32	3S-FE	AT	2000	199101	199406	TY-25A48	43410-20231				
SV33 4WD	3S-FE	AT	2000	199101	199406	TY-09	43410-20221				
SV33 4WD	3S-FE	AT	2000	199101	199406	TY-25A48	43410-20231				
SV33 4WD	3S-GE	AT	2000	199101	199206	TY-09	43410-32231				
SV33 4WD	3S-GE	AT	2000	199101	199206	TY-25A48	43410-32241				
SV33 4WD	3S-GE	MT	2000	199101	199206	TY-09	43410-32251				
SV33 4WD	3S-GE	MT	2000	199101	199206	TY-25A48	43410-32261				
SV35 4WD	3S-FE	MT/AT	2000	199206	199406	TY-09	43410-12400	TYIP-RAV4	43403-12050	TYID-RAV4	43403-12060
SV35 4WD	3S-FE	MT/AT	2000	199206	199406	TY-25A48	43410-12410	TYIP-RAV4	43403-12050	TYID-RAV4	43403-12060
SV41	3S-FE	AT	2000	199407	199806	TY-09	43410-20221				
SV42 4WD	3S-FE	AT	2000	199407	199806	TY-09	43410-20221				
SV43 4WD	3S-FE	MT/AT	2000	199407	199806	TY-09	43410-12400	TYIP-RAV4	43403-12050	TYID-RAV4	43403-12060
SV41	3S-FE	4AT	2000	199407	199806	TY-25A48	43410-20231				
SV42 4WD	3S-FE	4AT	2000	199407		TY-09	43410-20221				
SV42 4WD	3S-FE	4AT	2000	199407	199806	TY-25A48	43410-20231				
SV43 4WD	3S-FE	MT/AT	2000	199407	199806	TY-25A48	43410-12410	TYIP-RAV4	43403-12050	TYID-RAV4	43403-12060
CV40	3C-T	MT/AT	2200	199407	199806	TY-12	43410-32181	TYIR-5226	43030-33010	TYIU-5006	43040-20020
CV40	3C-T	MT/AT	2200	199407	199806	TY-24A48	43410-32150	TYIR-5226	43030-33010	TYIU-5006	43040-20020
VZV33 4WD	4VZ-FE	AT	2500	199105	199406	TY-32A48	43410-32271				
VZV33 4WD	4VZ-FE	AT	2500	199105	199406	TY-32A48	43410-32281				
VZV32	4VZ-FE	AT	2500	199105	199406	TY-32	43410-32271				
VZV32	4VZ-FE	AT	2500	199105	199406	TY-32A48	43410-32281				
VZV33 4WD	4VZ-FE	AT	2500	199105	199206	TY-09	43410-20221				
VZV33 4WD	4VZ-FE	AT	2500	199105	199406	TY-25A48	43410-20231				
VZV32	4VZ-FE	AT	2500	199206	199406	TY-32A48	43410-32281				
VZV32	4VZ-FE	AT	2500	199206	199406	TY-25A48	43410-20231				
VCV10	3VZ-FE	AT	3000	199110	199608	TY-28	43410-06090				
CARINA E (UKP)											
ST190	4A-FE	MT/AT	1600	199205	199710	TY-CE1A48	43460-09070	TYIU-CE1	43403-05020	TYIU-CE1	43403-05020
ST190	4A-FE	MT/AT	1600	199205	199710	TY-CE1A48	43460-09080	TYIU-CE1	43403-05010	TYIU-CE1	43403-05010
ST190	7A-FE	MT/AT	1800	199205	199710	TY-27A48	43460-09150	TYIU-CE1	43403-05020	TYIU-CE1	43403-05020
ST190	7A-FE	MT/AT	1800	199205	199710	TY-27A48	43460-09160	TYIU-CE1	43403-05010	TYIU-CE1	43403-05010
ST190	3S-FE	MT/AT	2000	199405	199710	TY-27A48	43410-05130				
ST190	3S-FE	MT/AT	2000	199405	199710	TY-27A48	43410-05140				
CT190	2C	MT/AT	2000	199405	199710	TY-27A48	43410-05140				
CAVALIER											
TJGOO	T2	4AT	2400	199601	200004		SA260-39288				
CELICA											
AT160	4A-GELU	MT	1600	198508	198804	TY-09	43410-20100				
ST160	1S-ILU EL	MT/AT	1800	198508	198805	TY-09	43410-20040				
ST163	4S-F1	MT/AT	1800	198805	198908	TY-09	43410-20040				
ZZT231	2ZZ-GE	6MT	1800	199909		TY-55A48	43410-20800				
ZZT231	2ZZ-GE	6MT	1800	199909		TY-55A48	43410-20600				
ZZT231	2ZZ-GE	6MT	1800	199909		TY-55A48	43410-20600				
ZZT231	2ZZ-GE	4AT	1800	199909		TY-55A48	43410-20600				
ZZT230	1ZZ-FE	5MT	1800	199909		TY-55A48	43410-20800				
ZZT230	1ZZ-FE	4AT	1800	199909		TY-55A48	43410-20780				
ST162	3S-FE	AT	2000	198508	198908	TY-09	43410-20040				
ST162	3S-FE	MT	2000	198508	198908	TY-09	43410-20050				
ST162	3S-GELU	AT	2000	198508	198908	TY-05	43410-20061				
ST162	3S-GELU	MT	2000	198508	198908	TY-05	43410-20071				
ST182	3S-FE	AT	2000	198909	199108	TY-09	43410-20220				
ST182	3S-FE	AT	2000	198909	199108	TY-09	43410-20230				
ST182	3S-FE	MT/AT	2000	198909	199308	TY-12	43410-20241				
ST182	3S-FE	MT/AT	2000	198909	199308	TY-24A48	43410-20251				
ST182	3S-GE	AT	2000	198909	199308	TY-05	43410-20281				
ST182	3S-GE	AT	2000	198909	199308		43410-20291				
ST182	3S-GE	MT	2000	198909	199308	TY-05	43410-20301				
ST182	3S-GE	MT	2000	198909	199308		43410-20311				
ST183 4WD	3S-FE	AT	2000	198909	199108	TY-09	43410-20220				
ST183 4WD	3S-FE	AT	2000	198909	199108	TY-09	43410-20230				
ST183 4WD	3S-FE	MT/AT	2000	198909	199309	TY-12	43410-20241				

TOYOTA

MODEL	ENGINE	AT/MT	CC	YEAR	YEAR	OUTER	O.E No.R	INNER R	O.E No.IR	INNER L	O.E No.IL
ST183 4WD	3S-FE	MT/AT	2000	198909	199309	TY-24A48	43410-20251				
ST183 4WD	3S-GE	AT	2000	198909	199309	TY-05	43410-20281				
ST183 4WD	3S-GE	AT	2000	198909	199309		43410-20291				
ST183 4WD	3S-GE	MT	2000	198909	199309	TY-05	43410-20301				
ST183 4WD	3S-GE	MT	2000	198909	199309		43410-20311				
ST185 4WD	3S-GTE	MT	2000	198910	199308	TY-01	43410-32111				
ST185 4WD	3S-GTE	MT	2000	198910	199308	TY-01A48	43410-20321				
ST185	3S-GTE	MT	2000	198910		TY-01A48	43410-20321				
ST202	3S-FE	MT/AT	2000	199309	199909	TY-12	43410-20670				
ST202	3S-FE	MT/AT	2000	199309	199909	TY-24A48	43410-20680				
ST202	3S-GE	MT/AT	2000	199309	199909	TY-05	43410-20730				
ST202	3S-GE	MT/AT	2000	199309	199909	TY-20A48	43410-20740				
ST203 4WD	3S-FE	MT/AT	2000	199309	199712	TY-12	43410-20670				
ST203 4WD	3S-FE	MT/AT	2000	199309	199712	TY-24A48	43410-20680				
ST205 4WD	3S-GTE	MT	2000	199402	199909		43410-20660				
ST185	3S-GTE	MT	2000	199810		TY-01A48	43410-32111				
COROLLA FIELDER											
NZE121G	1NZ-FE	MT/AT	1500	200008		TY-54	43410-12490	TYIU-YAR15	43403-10011	TYIU-YAR15	43403-10011
NZE121G	1NZ-FE	MT/AT	1500	200008		TY-54	43410-02180	TYIU-5009	43403-12040	TYIU-5009	43403-12040
NZE124G 4WD	1NZ-FE	4AT	1500	200008		TY-54	43410-12500			TYIU-5009	43403-12040
NZE124G 4WD	1NZ-FE	4AT	1500	200008		TY-54	43410-12500			TYIU-YAR15	43403-10011
ZZE122G	1ZZ-FE	MT/AT	1800	200008		TY-55	43410-02220	TYIP-5001	43040-32040	TYIP-5001	43040-32040
ZZE124G 4WD	1ZZ-FE	4AT	1800	200008		TY-54	43410-12030	TYIP-5001	43040-32040		
ZZE123G	2ZZ-GE	4AT	1800	200008		TY-55	43410-12510				
ZZE123G	2ZZ-GE	5MT	1800	200008		TY-55	43410-12510				
ZZE122G	1ZZ-FE	MT/AT	1800	200008		TY-55	43410-12600				
ZZE122G	1ZZ-FE	MT/AT	1800	200008		TY-55	43410-02220				
CE121G	3CE	4AT	2200	200008		TY-55	43410-12610				
CE121G	3CE	4AT	2200	200008		TY-55	43410-02230				
COROLLA RUNX/ALLEX											
NZE121	1NZ-FE	4AT	1500	200101		TY-54	43410-12490	TYIU-YAR15	43403-10011	TYIU-YAR15	43403-10011
NZE121	1NZ-FE	4AT	1500	200101		TY-54	43410-02180	TYIU-5009	43403-12040	TYIU-5009	43403-12040
NZE124 4WD	1NZ-FE	4AT	1500	200101		TY-54	43410-12500			TYIU-YAR15	43403-10011
ZZE122	1ZZ-FE	4AT	1800	200209		TY-55	43410-02220	TYIP-5001	43040-32040	TYIP-5001	43040-32040
ZZE124 4WD	1ZZ-FE	4AT	1800	200209		TY-55	43410-12531			TYIP-5001	43040-32040
ZZE123	2ZZ-GE	6MT	1800	200101		TY-55	43410-12510				
ZZE123	2ZZ-GE	4AT	1800	200101		TY-55	43410-12510				
COROLLA SPACIO											
NZE121	1NZ-FE	4AT	1500	200101		TY-54	43410-12490	TYIU-YAR15	43403-10011	TYIU-YAR15	43403-10011
NZE121	1NZ-FE	4AT	1500	200101		TY-54	43410-02180	TYIU-5009	43403-12040	TYIU-5009	43403-12040
ZZE124 4WD	1ZZ-FE	4AT	1800	200209		TY-55	43410-12531			TYIP-5001	43040-32040
AE111	4A-FE	4AT	1600	199701	199709	TY-26A48	43410-20450	TYIU-5009	43403-12040	TYIU-5009	43403-12040
AF111	4A-FE	4AT	1600	199701	199709	TY-26A48	43410-20450	TYIU-5009	43403-12040	TYIU-5009	43403-12040
AE111	4A-FE	4AT	1600	199710	200105	TY-26A48	43410-20451	TYIU-5009	43403-12040	TYIU-5009	43403-12040
AF111	4A-FE	4AT	1600	199710	200105	TY-26A48	43410-20451	TYIU-5009	43403-12040	TYIU-5009	43403-12040
AE115 4WD	7A-FE	4AT	1800	199701	199709	TY-25A48	43410-12410	TYIP-RAV4	43403-12050	TYID-RAV4	43403-12060
AF115 4WD	7A-FE	4AT	1800	199701	199709	TY-25A48	43410-12410	TYIP-RAV4	43403-12050	TYID-RAV4	43403-12060
AE115 4WD	7A-FE	4AT	1800	199710	200105	TY-25A48	43410-12411	TYIP-RAV4	43403-12050	TYID-RAV4	43403-12060
AF115 4WD	7A-FE	4AT	1800	199710	200105	TY-25A48	43410-12411	TYIP-RAV4	43403-12050	TYID-RAV4	43403-12060
COROLLA SPRINTER VAN/COROLLA SPRINTER WAGON											
EE97G	2E	MT	1300	199101	199109	TY-10	43410-12131	TYIU-5009	43403-12040	TYIU-5009	43403-12040
EE96V	2E	MT/AT	1300	199101	199109	TY-10	43410-12131	TYIU-5009	43403-12040	TYIU-5009	43403-12040
EE106V	2E	MT/AT	1300	199109	199401	TY-10	43410-12260	TYIU-YAR15	43403-10011	TYIU-YAR15	43403-10011
EE102V	4E-FE	MT/AT	1300	199401	199505	TY-10	43410-12260	TYIU-YAR15	43403-10011	TYIU-YAR15	43403-10011
EE98V	3E	MT/AT	1500	198705	199101	TY-04	43410-12130				
AE91G	5A-FE	MT/AT	1500	198708	199101	TY-04	43410-12130				
AE91G	5A-FE	MT/AT	1500	199101	199109	TY-10	43410-12131	TYIU-5009	43403-12040	TYIU-5009	43403-12040
EE98V	3E	MT/AT	1500	199101	199109	TY-10	43410-12131	TYIU-5009	43403-12040	TYIU-5009	43403-12040
EE108G	3E	MT/AT	1500	199109	199401	TY-10	43410-12260	TYIU-YAR15	43403-10011	TYIU-YAR15	43403-10011
AE100G	5A-FE	AT	1500	199109	199505	TY-10	43410-12260	TYIU-YAR15	43403-10011	TYIU-YAR15	43403-10011
AE100G	5A-FE	AT	1500	199109	199505	TY-26A48	43410-12270	TYIU-5009	43403-12040	TYIU-5009	43403-12040
AE100G	5A-FE	MT/AT	1500	199109	199505	TY-10	43410-20440	TYIU-5009	43403-12040	TYIU-5009	43403-12040
AE100G	5A-FE	MT/AT	1500	199109	199505	TY-26A48	43410-20450	TYIU-5009	43403-12040	TYIU-5009	43403-12040
AE100G	5A-FE	MT/AT	1500	199109	199505	TY-08	43410-02031	TYIU-E10	43047-02030	TYIU-E10	43047-02030
AE100G	5A-FE	MT/AT	1500	199109	199505		43410-02041	TYIU-5009	43403-12040	TYIU-5009	43403-12040
EE107V	3E	MT/AT	1500	199109	199401	TY-10	43410-12260	TYIU-YAR15	43403-10011	TYIU-YAR15	43403-10011
EE104G	5E-FE	MT/AT	1500	199401	199505	TY-10	43410-12260	TYIU-YAR15	43403-10011	TYIU-YAR15	43403-10011
EE104G	5E-FE	MT/AT	1500	199401	199505	TY-10	43410-20440	TYIU-5009	43403-12040	TYIU-5009	43403-12040
EE103V	5E-FE	MT/AT	1500	199401	199505	TY-10	43410-12260	TYIU-YAR15	43403-10011	TYIU-YAR15	43403-10011
AE104 4WD	4A-FE	MT/AT	1600	199505	199808	TY-09	43410-12400	TYIP-RAV4	43403-12050	TYID-RAV4	43403-12060
AE104 4WD	4A-FE	MT/AT	1600	199505	199808	TY-25A48	43410-12410	TYIP-RAV4	43403-12050	TYID-RAV4	43403-12060
CE80	1CL	MT/AT	1800	198301	198501	TY-09	43410-12070				
CE97G	1C	MT/AT	1800	198705	199009	TY-09	43410-12150				
CE96V	1C	MT/AT	1800	198705	199009	TY-09	43410-12150				
CE97G	1C	MT/AT	1800	199009	199101	TY-09	43410-20340				
CE96V	1C	MT/AT	1800	199009	199101	TY-09	43410-20340				
CE97G	1C	MT/AT	1800	199101	199109	TY-09	43410-20341				
CE96V	1C	MT/AT	1800	199101	199109	TY-09	43410-20341				
CE108G	2C	MT/AT	2000	199109	199508	TY-09	43410-20341				
CE106V	2C	MT/AT	2000	199109	199401	TY-09	43410-20341				
CE109 4WD	2C	MT	2000	199109	199401	TY-09	43410-12420	TYIP-RAV4	43403-12050	TYID-RAV4	43403-12060
CE100G	2C	MT/AT	2000	199505	199808	TY-09	43410-20341				
CE100G	2C	MT/AT	2000	199505	199808	TY-25A48	43410-12350				
COROLLA SPRINTER											

TOYOTA

MODEL	ENGINE	AT/MT	CC	YEAR	YEAR	OUTER	O.E No.R	INNER R	O.E No.IR	INNER L	O.E No.IL
EE80	2E-LU	MT/AT	1300	198301	198704	TY-04	43410-12080				
EE90	2E	MT	1300	198701	199106	TY-04	43410-12021				
EE97G	2E	MT/AT	1300	198701	199106	TY-04	43410-12050				
EE90	2E	MT	1300	198701	199106	TY-04	43410-12060				
EE97G	2E	MT/AT	1300	198701	199106	TY-04	43410-12080				
EE90	2E	MT/AT	1300	198701	199101	TY-04	43410-12130				
EE90	2E	MT/AT	1300	198705	198711	TY-10	43410-12081				
EE90	2E	MT/AT	1300	199101	199106	TY-10	43410-12131	TYIU-5009	43403-12040	TYIU-5009	43403-12040
EE101	4E-FE	MT/AT	1300	199106	199505	TY-10	43410-12260	TYIU-YAR15	43403-10011	TYIU-YAR15	43403-10011
EE101	4E-FE	MT/AT	1300	199106	199505	TY-26A48	43410-12270	TYIU-YAR15	43403-10011	TYIU-YAR15	43403-10011
EE111	4E-FE	MT/AT	1300	199506	200008	TY-26A48	43410-20441	TYIU-YAR15	43403-10011	TYIU-YAR15	43403-10011
AE81	3A-LU	MT/AT	1500	198305	198704	TY-04	43410-12080				
AE91	5A-FE	MT/AT	1500	198701	199101	TY-04	43410-12130				
AE98	3E	MT/AT	1500	198701	199202	TY-04	43410-12130				
AE91	5A-FE	MT/AT	1500	198705	199101	TY-04	43410-12130				
AE91	5A-FE	MT/AT	1500	198905	199101	TY-10	43410-12190				
AE100	5A-FE	MT	1500	199101	199505	TY-10	43410-20440	TYIU-5009	43403-12040	TYIU-5009	43403-12040
AE91	5A-FE	MT/AT	1500	199101	199202	TY-10	43410-12131	TYIU-5009	43403-12040	TYIU-5009	43403-12040
AE91	5A-FE	MT/AT	1500	199101	199202	TY-10	43410-12191				
AE100	5A-FE	AT	1500	199106	199505	TY-10	43410-12260	TYIU-YAR15	43403-10011	TYIU-YAR15	43403-10011
AE100	5A-FE	AT	1500	199106	199505	TY-26A48	43410-12270				
AE100	5A-FE	MT/AT	1500	199106	199505	TY-10	43410-20440	TYIU-5009	43403-12040	TYIU-5009	43403-12040
AE100	5A-FE	MT/AT	1500	199106	199505	TY-26A48	43410-20450	TYIU-5009	43403-12040	TYIU-5009	43403-12040
AE100	5A-FE	MT/AT	1500	199106	199505	TY-08	43410-02031	TYIU-E10	43047-02030	TYIU-E10	43047-02030
AE110	5A-FE	AT	1500	199505	200009	TY-10	43410-12260	TYIU-YAR15	43403-10011	TYIU-YAR15	43403-10011
AE101	5A-FE	AT	1500	199505	199808	TY-26A48	43410-12270				
AE110	5A-FE	MT/AT	1500	199505	200009	TY-10	43410-20440	TYIU-5009	43403-12040	TYIU-5009	43403-12040
AE110	5A-FE	MT/AT	1500	199505	200009	TY-26A48	43410-20450	TYIU-5009	43403-12040	TYIU-5009	43403-12040
AE110	5A-FE	AT	1500	199505	200009	TY-26A48	43410-12270				
AE82	4A-GELU	MT/AT	1600	198305	198704	TY-04	43410-12080				
AE82	4A-GELU	MT	1600	198410	198704	TY-09	43410-12140				
AE95 4WD	4A-F	MT/AT	1600	198701	198801	TY-09	43410-12030	TYIP-RAV4	43403-12050	TYID-RAV4	43403-12060
AE92	4A-GE	AT	1600	198705	199101	TY-04	43410-12130				
AE92	4A-GE	AT	1600	198705	199101	TY-10	43410-12190				
AE92	4A-GE	MT	1600	198705	198709	TY-09	43410-12140				
AE92	4A-GZE	MT	1600	198705	199101	TY-19	43410-12160				
AE92	4A-GZE	MT	1600	198705	199101	TY-25A48	43410-12210				
AE92	4A-GE	MT	1600	198709	199101	TY-09	43410-12170				
AE92	4A-GE	MT	1600	198709	199101	TY-25A48	43410-12200				
AE95 4WD	4A-F	MT	1600	198710	199101	TY-09	43410-12230	TYIP-RAV4	43403-12050	TYID-RAV4	43403-12060
AE95 4WD	4A-F	MT	1600	198710	199101	TY-25A48	43410-12220	TYIP-RAV4	43403-12050	TYID-RAV4	43403-12060
AE95 4WD	4A-F	MT/AT	1600	198801	199106	TY-09	43410-12180	TYIP-RAV4	43403-12050	TYID-RAV4	43403-12060
AE101	4A-FE	MT	1600	199101	199505	TY-10	43410-20440	TYIU-5009	43403-12040	TYIU-5009	43403-12040
AE92	4A-GE	AT	1600	199101	199205	TY-10	43410-12131	TYIU-5009	43403-12040	TYIU-5009	43403-12040
AE92	4A-GE	AT	1600	199101	199205	TY-10	43410-12191				
AE92	4A-GE	MT	1600	199101	199205	TY-09	43410-12171				
AE92	4A-GE	MT	1600	199101	199205	TY-25A48	43410-12201				
AE92	4A-GZE	MT	1600	199101	199106	TY-19	43410-12161				
AE92	4A-GZE	MT	1600	199101	199106	TY-09	43410-12211				
AE95 4WD	4A-F	MT/AT	1600	199101	199106	TY-09	43410-42020	TYIP-RAV4	43403-12050	TYID-RAV4	43403-12060
AE95 4WD	4A-F	MT/AT	1600	199101	199106	TY-25A48	43410-42010	TYIP-RAV4	43403-12050	TYID-RAV4	43403-12060
AE101	4A-GE	MT/AT	1600	199101	199505	TY-09	43410-12360	TYIU-5009	43403-12040	TYIU-5009	43403-12040
AE101	4A-FE	MT/AT	1600	199106	199505	TY-10	43410-20440	TYIU-5009	43403-12040	TYIU-5009	43403-12040
AE101	4A-FE	MT/AT	1600	199106	199505	TY-26A48	43410-20450	TYIU-5009	43403-12040	TYIU-5009	43403-12040
AE101	4A-FE	MT/AT	1600	199106	199505		43410-02030	TYIU-5009	43403-12040	TYIU-5009	43403-12040
AE101	4A-FE	MT/AT	1600	199106	199505		43410-02040	TYIU-5009	43403-12040	TYIU-5009	43403-12040
AE101	4A-GE	MT/AT	1600	199106	199505	TY-25A48	43410-12370				
AE101	4A-GZE	MT	1600	199106	199505		43410-12390				
AE101	4A-FE	MT/AT	1600	199106	199505	TY-08	-	TYIU-E10	43047-02030	TYIU-E10	43047-02030
AE101	4A-FE	MT/AT	1600	199109	199505	TY-09	43410-12400				
AE104 4WD	4A-FE	MT/AT	1600	199109	199505	TY-25A48	43410-12410	TYIP-RAV4	43403-12050	TYID-RAV4	43403-12060
AE104 4WD	4A-FE	MT/AT	1600	199109	199505	TY-09	43410-12400	TYIP-RAV4	43403-12050	TYID-RAV4	43403-12060
AE111	4A-FE	MT/AT	1600	199505	199705	TY-10	43410-20440				
AE111	4A-FE	MT/AT	1600	199505	199705	TY-26A48	43410-20450	TYIU-5009	43403-12040	TYIU-5009	43403-12040
AE111	4A-FE	MT/AT	1600	199505	199705		43410-02030	TYIU-5009	43403-12040	TYIU-5009	43403-12040
AE111	4A-FE	MT/AT	1600	199505	199705		43410-02040	TYIU-5009	43403-12040	TYIU-5009	43403-12040
AE111	4A-GE	MT/AT	1600	199505	200009	TY-09	43410-12360	TYIU-5009	43403-12040	TYIU-5009	43403-12040
AE111	4A-GE	MT/AT	1600	199505	200009	TY-25A48	43410-12370				
AE114 4WD	4A-FE	MT/AT	1600	199505	200009	TY-09	43410-12400	TYIP-RAV4	43403-12050	TYID-RAV4	43403-12060
AE114 4WD	4A-FE	MT/AT	1600	199505	200009	TY-25A48	43410-12410	TYIP-RAV4	43403-12050	TYID-RAV4	43403-12060
AE114 4WD	4A-FE	MT/AT	1600	199505	200009	TY-25A48	43410-12410	TYIU-RAV4R	42350-42010	TYIU-RAV4R	42350-42010
CE80	1C-L	MT/AT	1800	198305	198704	TY-09	43410-12100				
CE90	1C	MT/AT	1800	198705	199009	TY-09	43410-12150				
CE90	1C	MT/AT	1800	199001	199101	TY-25A48	43410-12210				
CE90	1C	MT/AT	1800	199009	199101	TY-09	43410-20340				
CE90	1C	MT/AT	1800	199101	199112	TY-09	43410-12211				
CE90	1C	MT/AT	1800	199101	199106	TY-09	43410-20341				
CT150	2C-L	MT/AT	2000	198301	198501	TY-09	43410-20010				
CE95 4WD	2C	MT	2000	198910	199101	TY-09	43410-32140	TYIP-RAV4	43403-12050	TYID-RAV4	43403-12060
CE100	2C	MT/AT	2000	199101	199505	TY-09	43410-12320				
CE95 4WD	2C	MT	2000	199101	199106	TY-09	43410-32141	TYIP-RAV4	43403-12050	TYID-RAV4	43403-12060
CE100	2C	MT/AT	2000	199106	199505	TY-09	43410-20341				
CE100	2C	MT/AT	2000	199106	199505	TY-25A48	43410-12350				
CE104 4WD	2C	MT	2000	199106	199505	TY-09	43410-12420	TYIP-RAV4	43403-12050	TYID-RAV4	43403-12060

TOYOTA

MODEL	ENGINE	AT/MT	CC	YEAR	YEAR	OUTER	O.E No.R	INNER R	O.E No.IR	INNER L	O.E No.IL
CE104 4WD	2C	MT	2000	199106	199505	TY-25A48	43410-12430	TYIP-RAV4	43403-12050	TYID-RAV4	43403-12060
CE110	2C	MT/AT	2000	199505	200009	TY-09	43410-20341				
CE114 4WD	2C	MT	2000	199505	200009	TY-09	43410-12420	TYIP-RAV4	43403-12050	TYID-RAV4	43403-12060
CE114 4WD	2C	MT	2000	199505	200009	TY-25A48	43410-12430	TYIP-RAV4	43403-12050	TYID-RAV4	43403-12060
CE110	2C	MT/AT	2000	199505	200009	TY-25A48	43410-12350				
COROLLA											
NZE120	2NZ-FE	MT/AT	1300	200008		TY-54	43410-12490				
NZE120	2NZ-FE	MT/AT	1300	200008		TY-54	43410-02180				
NZE121	1NZ-FE	MT/AT	1500	200008		TY-54	43410-12490				
NZE121	1NZ-FE	MT/AT	1500	200008		TY-54	43410-02180				
NZE124 4WD	1NZ-FE	4AT	1500	200008		TY-54	43410-12500				
NZE121	1NZ-FE	MT/AT	1500	200008		TY-54	43410-12660				
ZZE122	1ZZ-FE	4AT	1800	200008		TY-55	43410-12600				
ZZE122	1ZZ-FE	4AT	1800	200008		TY-55	43410-02220				
ZZE124 4WD	1ZZ-FE	4AT	1800	200008		TY-54	43410-12530				
ZZE122	1ZZ-FE	4AT	1800	200008		TY-55	43410-12670				
ZZE122	1ZZ-FE	4AT/F	1800	200102		TY-54A48	43460-19795				
CE121	3CE	4AT	2200	200008		TY-55	43410-12610				
CE121	3CE	4AT	2200	200008		TY-55	43410-02230				
CE121	3CE	5MT	2200	200008		TY-55	43410-12520				
CE121	3CE	4AT	2200	200008		TY-55	43410-12680				
NRE150	1NR-FE	MT/AT	1300	200610		TY-ZZE15	43460-09R20	TYIU-220	43040-02030	TYIU-220	43040-02030
ZZE150	4ZZ-FE	MT/AT	1400	200610		TY-ZZE15	43460-09R20	TYIU-220	43040-02030	TYIU-220	43040-02030
NDE150	1ND-FTV	MT/AT	1400	200610		TY-ZZE15	43460-09R20	TYIU-220	43040-02030	TYIU-220	43040-02030
ZRE151	1ZR-FE	MT/AT	1600	200610			43460-09R30	TYIU-AV18	43040-05110	TYIU-AV18	43040-05110
ZRE152	2ZR-FAE	MT/AT	1800	200610			43470-09S90		43030-05200		43040-05141
ADE150	1AD-FTV	MT/AT	2000	200610			43460-09R30	TYIU-AV18	43040-05110	TYIU-AV18	43040-05110
COROLLA (UKP)											
EE111	4E-FE	MT/AT	1300	199809	199911	TY-51A48	43460-09260	TYIU-110	43403-05030	TYIU-110	43403-05030
ZZE111	4ZZ-FE	MT	1400	199911	200111	TY-51A48	43460-09270	TYIU-110	43403-05030	TYIU-110	43403-05030
ZZE120	4ZZ-FE	MT	1400	200111		TY-C12A48	43460-09601	TYIU-220	43040-02030	TYIU-220	43040-02030
ZZE150	4ZZ-FE	MT	1400	200702			43410-02570	TYIU-220	43040-02030	TYIU-220	43040-02030
ZZE112	3ZZ-FE	MT/AT	1600	199911	200111	TY-51A48	43460-09270	TYIU-110	43403-05030	TYIU-110	43403-05030
AE111	4A-FE	MT/AT	1600	199809	199911	TY-51A48	43460-09260	TYIU-110	43403-05030	TYIU-110	43403-05030
ZZE121	3ZZ-FE	MT/AT	1600	200111		TY-C12A48	43460-09601	TYIU-220	43040-02030	TYIU-220	43040-02030
ZZE150	1ZR-FE	MT	1600	200702			43410-02570	TYIU-220	43040-02030	TYIU-220	43040-02030
ZZE123	2ZZ-GE	MT	1800	200111			43460-09611				
ZZE123	2ZZ-GE	MT	1800	200111			43460-09G60				
CDE120	1CDF-TV	MT	2000	200111			43460-09621				
COROLLA II/TERCEL/CORSA											
AL20	2AU	MT/AT	1300	198201	198501		43410-16040				
AL20	2AU	MT/AT	1300	198201	198501		43410-16042				
EL30	2E	MT/AT	1300	198605	199008	TY-16	43410-16060				
EL30	2E	MT/AT	1300	198605	199008	TY-16	43460-19157				
EL41	4E-FE	MT/AT	1300	199009	199409	TY-16	43410-16130				
EL41	4E-FE	MT/AT	1300	199009	199409	TY-37A48	43410-16140				
EL41	4E-FE	MT/AT	1300	199009	199409	TY-36	43410-16131				
EL41	4E-FE	MT/AT	1300	199009	199409	TY-37	43460-19536				
EL41	4E-FE	MT/AT	1300	199009	199409	TY-36	43410-16190				
EL41	4E-FE	MT/AT	1300	199009	199409	TY-37	43460-19626				
EL41	4E-FE	MT/AT	1300	199009	199409	TY-37A48	43410-16141				
EL41	4E-FE	MT/AT	1300	199009	199409	TY-26A48	43460-19546				
EL41	4E-FE	MT/AT	1300	199009	199409	TY-26A48	43410-16200				
EL41	4E-FE	MT/AT	1300	199009	199409	TY-26A48	43410-16201				
EL41	4E-FE	MT/AT	1300	199009	199409	TY-26A48	43460-19615				
EL51	4A-FE	MT/AT	1300	199101	199409	TY-36	43410-16190				
EL51	4E-FE	MT/AT	1300	199409	199908	TY-36	43410-16131				
EL51	4E-FE	MT/AT	1300	199409	199908	TY-37	43410-16131	TYIU-YAR13	43403-16020	TYIU-YAR13	43403-16020
EL51	4E-FE	MT/AT	1300	199409	199908	TY-37	43460-19536	TYIU-YAR13	43403-16020	TYIU-YAR13	43403-16020
EL51	4E-FE	MT/AT	1300	199409	199908	TY-37	43410-16131	TYIU-YAR13	43403-16020	TYIU-YAR13	43403-16020
EL51	4E-FE	MT/AT	1300	199409	199908	TY-37A48	43410-16141	TYIU-YAR13	43403-16020	TYIU-YAR13	43403-16020
EL51	4E-FE	MT/AT	1300	199409	199908	TY-26A48	43460-19546	TYIU-YAR13	43403-16020	TYIU-YAR13	43403-16020
EL51	4E-FE	MT/AT	1300	199409	199908	TY-26A48	43410-16200	TYIU-YAR13	43403-16020	TYIU-YAR13	43403-16020
EL51	4E-FE	MT/AT	1300	199409	199908	TY-26A48	43410-16201	TYIU-YAR13	43403-16020	TYIU-YAR13	43403-16020
EL51	4E-FE	MT/AT	1300	199409	199908	TY-26A48	43460-19615	TYIU-YAR13	43403-16020	TYIU-YAR13	43403-16020
EL51	4E-FE	MT/AT	1300	199409	199709	TY-36A48	43410-16280				
EL51	4E-FE	MT/AT	1300	199409	199908	TY-36	43410-16270				
EL51	4E-FE	MT/AT	1300	199409	199709	TY-36A48	43410-16280				
EL51	4E-FE	MT/AT	1300	199709	199908	TY-36	43410-16281				
AL21	3AU	MT/AT	1500	198201	198501		43410-16040/2				
AL21	3AU	MT/AT	1500	198201	198501		43410-16042				
EL31	3E	MT/AT	1500	198501	199009	TY-16	43410-16080				
EL31	3E	MT/AT	1500	198501	199009	TY-16	43410-16090				
EL31	3E	MT/AT	1500	198501	199009	TY-16	43410-16050				
NL30	1N-T	AT	1500	198605	199008	TY-16	43410-16060				
EL31	3E	MT/AT	1500	198605	199008	TY-16	43410-16060				
EL31	3E	MT/AT	1500	198605	199008	TY-16	43460-19157				
NL30	1N-T	MT/AT	1500	198605	199008	TY-37	43410-16070/1				
NL30	1N-T	AT	1500	198605	199008	TY-37	43460-19165				
NL30	1N-T	AT	1500	198605	199008	TY-37	43460-19166				
NL30	1N-T	AT	1500	198605	199008	TY-37	43460-19167				
EL31	3E	MT/AT	1500	198605	199008	TY-16	43460-19177				
EL43	5E-FE FHE	MT/AT	1500	199009	199409	TY-16	43410-16110				
EL43	5E-FE FHE	MT/AT	1500	199009	199409		43410-16120				

TOYOTA

MODEL	ENGINE	AT/MT	CC	YEAR	YEAR	OUTER	O.E No.R	INNER R	O.E No.IR	INNER L	O.E No.IL
EL45 4WD	5E-FE	MT/AT	1500	199009	199409	TY-37	43410-16160				
EL45 4WD	5E-FE	MT/AT	1500	199009	199409	TY-34	43410-16170				
NL40	1N-T	AT	1500	199009	199409	TY-16	43410-16130				
NL40	1N-T	AT	1500	199009	199409	TY-37A48	43410-16140				
NL40	1N-T	MT	1500	199009	199409	TY-37	43410-16150				
EL43	5E-FE	MT/AT	1500	199009	199406	TY-37	43410-16210				
EL43	5E-FE	MT/AT	1500	199009	199406	TY-37	43460-19516				
EL43	5E-FE	MT/AT	1500	199009	199406	TY-26A48	43410-16220				
EL43	5E-FE	MT/AT	1500	199009	199406	TY-26A48	43460-19527				
EL43	5E-FHE	MT/AT	1500	199009	199406	TY-37	43410-16210				
EL43	5E-FHE	MT/AT	1500	199009	199406	TY-26A48	43410-16220				
NL40	1N-T	5MT	1500	199009	199409	TY-37	43410-16151				
NL40	1N-T	5MT	1500	199009	199409	TY-37	43410-16151				
NL40	1N-T	5MT	1500	199009	199409	TY-37	43460-19556				
NL40	1N-T	5MT	1500	199009	199409	TY-26A48	43410-16100				
NL40	1N-T	5MT	1500	199009	199409	TY-26A48	43410-16101				
NL40	1N-T	5MT	1500	199009	199409	TY-26A48	43460-19566				
NL40	1N-T	4AT	1500	199009	199409	TY-36	43410-16131				
NL40	1N-T	4AT	1500	199009	199409	TY-36	43410-16190				
NL40	1N-T	4AT	1500	199009	199409	TY-37A48	43410-16141				
NL40	1N-T	4AT	1500	199009	199409	TY-26A48	43410-16200				
NL40	1N-T	4AT	1500	199009	199409	TY-26A48	43410-16201				
EL45 4WD	5E-FE	MT/AT	1500	199009	199101	TY-37	43410-16160				
EL43	5E-FE	MT/AT	1500	199009	199101	TY-26A48	43460-19566				
EL45 4WD	5E-FE	MT/AT	1500	199009	199409	TY-26A48	43410-16171				
EL45 4WD	5E-FE	MT/AT	1500	199009	199409	TY-26A48	43470-19506				
EL43	5E-FE	MT/AT	1500	199101		TY-37	43410-16111				
EL53	5E-FE	MT/AT	1500	199101	199409	TY-37	43410-16210				
EL45 4WD	5E-FE	MT/AT	1500	199101	199409	TY-37	43410-16161				
EL45 4WD	5E-FE	MT/AT	1500	199101	199409	TY-37	43470-19496				
EL43	5E-FE	MT/AT	1500	199406	199409	TY-36	43410-16190				
EL43	5E-FE	MT/AT	1500	199406	199409	TY-37	43460-19626				
EL43	5E-FE	MT/AT	1500	199406	199409	TY-26A48	43410-16200				
EL43	5E-FE	MT/AT	1500	199406	199409	TY-26A48	43460-19615				
EL43	5E-FE	MT/AT	1500	199406	199409	TY-26A48	43460-19615				
EL43	5E-FE	MT/AT	1500	199406	199409	TY-36	43410-16190				
EL43	5E-FE	MT/AT	1500	199406	199409	TY-37A48	43410-16200				
EL53	5E-FE	MT/AT	1500	199409	199908	TY-36	43410-16270				
EL53	5E-FE	MT/AT	1500	199409	199908	TY-36	43410-16270				
EL53	5E-FE	MT/AT	1500	199409	199908	TY-36	43410-16190				
EL53	5E-FE	MT/AT	1500	199409	199908	TY-36	43410-16191				
EL53	5E-FE	MT/AT	1500	199409	199908	TY-36A48	43410-16280				
EL53	5E-FE	MT/AT	1500	199409	199908	TY-26A48	43460-19547	TYIU-YAR13	43403-16020	TYIU-YAR13	43403-16020
EL53	5E-FE	MT/AT	1500	199409	199908	TY-26A48	43410-16200	TYIU-YAR13	43403-16020	TYIU-YAR13	43403-16020
EL53	5E-FE	MT/AT	1500	199409	199908	TY-26A48	43410-16201	TYIU-YAR13	43403-16020	TYIU-YAR13	43403-16020
NL50	1N-T	5MT	1500	199409	199908	TY-37	43410-16151				
NL50	1N-T	5MT	1500	199409	199908	TY-37	43460-19556				
NL50	1N-T	5MT	1500	199409	199908	TY-26A48	43410-16101				
NL50	1N-T	5MT	1500	199409	199908	TY-26A48	43460-19566				
NL50	1N-T	4AT	1500	199409	199908	TY-36	43410-16131				
NL50	1N-T	4AT	1500	199409	199908	TY-36	43410-16190				
NL50	1N-T	4AT	1500	199409	199908	TY-37A48	43410-16141				
NL50	1N-T	4AT	1500	199409	199908	TY-37A48	43410-16200/1				
EL55 4WD	5E-FE	MT/AT	1500	199409	199905	TY-37	43410-16161				
EL55 4WD	5E-FE	MT/AT	1500	199409	199905	TY-37	43470-19496				
EL55 4WD	5E-FE	MT/AT	1500	199409	199905	TY-26A48	43410-16171				
EL55 4WD	5E-FE	MT/AT	1500	199409	199905	TY-26A48	43470-19506				
EL53	4E-FE	MT/AT	1500	199409	199709	TY-36A48	43410-16280				
EL53	4E-FE	MT/AT	1500	199409	199908	TY-36	43410-16270				
EL53	4E-FE	MT/AT	1500	199709	199908	TY-36	43410-16281				
CORONA VAN/CARINA VAN											
ET176V	3E	MT/AT	1500	198712	199101	TY-04	43410-20142				
ET176V	3E	MT/AT	1500	199101	199211	TY-10	43410-20440	TYIU-5009	43403-12040	TYIU-5009	43403-12040
CT176V	2C	MT/AT	2000	198712	198908	TY-09	43410-20160				
CT176V	2C	MT/AT	2000	198908	199101	TY-09	43410-20340				
CT176V	2C	MT/AT	2000	199101	199202	TY-09	43410-20341				
CORONA/CARINA											
AT151	3ALU	MT/AT	1500	198301	198501	TY-04	43410-12050				
AT150	3A-LU	MT/AT	1500	198310	198804	TY-04	43410-12080				
AT170	5A-FE	MT/AT	1500	198712	199005	TY-04	43410-20151				
AT170	5A-FE	MT/AT	1500	199005	199101	TY-04	43410-20142				
AT170	5A-FE	MT/AT	1500	199101	199211	TY-10	43410-20440	TYIU-5009	43403-12040	TYIU-5009	43403-12040
AT192	5A-FE	MT/AT	1500	199208	199608	TY-10	43410-20440	TYIU-5009	43403-12040	TYIU-5009	43403-12040
AT192	5A-FE	MT/AT	1500	199208	199608	TY-26A48	43410-20450	TYIU-5009	43403-12040	TYIU-5009	43403-12040
AT212	5A-FE	MT/AT	1500	199608	200201	TY-26A48	43410-20450	TYIU-5009	43403-12040	TYIU-5009	43403-12040
AE80	4ALU	MT/AT	1600	198301	198501	TY-04	43410-12060				
AE81	4ALU	MT/AT	1600	198301	198501	TY-04	43410-12020				
AT151	4A-ELU	MT/AT	1600	198405	198804	TY-04	43410-12080				
AT160	4A-GELU	MT/AT	1600	198501	199904	TY-09	43410-20100				
AT160	4A-GELU	MT/AT	1600	198501	198804	TY-09	43410-20100				
AT160	4A-GELU	AT	1600	198508	198804	TY-04	43410-20151				
AT160	4A-GELU	MT	1600	198508	198804	TY-09	43410-20100				
AT171	4A-FE	MT/AT	1600	198805	199005	TY-04	43410-20151				
AT171	4A-GE	AT	1600	198805	199005	TY-04	43410-20151				

TOYOTA

MODEL	ENGINE	AT/MT	CC	YEAR	YEAR	OUTER	O.E No.R	INNER R	O.E No.IR	INNER L	O.E No.IL
AT171	4A-GE	MT	1600	198805	199101	TY-09	43410-20110				
AT175 4WD	4A-FE	AT	1600	198808	199101	TY-09	43410-32140	TYIP-RAV4	43403-12050	TYID-RAV4	43403-12060
AT175 4WD	4A-FE	MT	1600	198808	199101	TY-12	43410-32130				
AT171	4A-GE	AT	1600	199005	199101	TY-04	43410-20142				
AT171	4A-GE	MT	1600	199005	199101	TY-09	43410-20111				
AT171	4A-FHE	AT	1600	199006	199101	TY-04	43410-20142				
AT171	4A-FHE	MT	1600	199006	199101	TY-09	43410-20111				
AT171	4A-FHE	AT	1600	199101	199208	TY-10	43410-20440	TYIU-5009	43403-12040	TYIU-5009	43403-12040
AT171	4A-FHE	MT	1600	199101	199208	TY-09	43410-20420	TYIU-5009	43403-12040	TYIU-5009	43403-12040
AT171	4A-GE	AT	1600	199101	199208	TY-10	43410-20440	TYIU-5009	43403-12040	TYIU-5009	43403-12040
AT171	4A-GE	MT	1600	199101	199208	TY-09	43410-20420	TYIU-5009	43403-12040	TYIU-5009	43403-12040
AT175 4WD	4A-FE	AT	1600	199101	199208	TY-09	43410-32141	TYIP-RAV4	43403-12050	TYID-RAV4	43403-12060
AT175 4WD	4A-FE	MT	1600	199101	199208	TY-12	43410-32131				
AT190	4A-FE	MT/AT	1600	199202	199601	TY-10	43410-20440	TYIU-5009	43403-12040	TYIU-5009	43403-12040
AT190	4A-FE	MT/AT	1600	199202	199601	TY-26A48	43410-20450	TYIU-5009	43403-12040	TYIU-5009	43403-12040
AT190	4A-FE	MT/AT	1600	199202	199601		43410-05010				
AT210	4A-FE	MT/AT	1600	199601	199709		43410-05121				
AT210	4A-FE	MT/AT	1600	199601	199709	TY-26A48	43410-20450	TYIU-5009	43403-12040	TYIU-5009	43403-12040
AT210	4A-GE	MT/AT	1600	199608	200201		43410-12311				
AT210	4A-FE	MT/AT	1600	199710	200201	TY-26A48	43410-20451	TYIU-5009	43403-12040	TYIU-5009	43403-12040
AT220	4A-FE	MT/AT	1600	199710	199807		43410-05290	TYIU-220	43040-05060	TYIU-220	43040-05060
AT220	4A-FE	MT/AT	1600	199807	200001		43410-05190	TYIU-110	43403-05030	TYIU-110	43403-05030
ST150	1S-LU	MT/AT	1800	198301	198501	TY-09	43410-12070				
ST150	1S-LU ILU	MT/AT	1800	198301	198805	TY-09	43410-20031				
ST150	1S-ELU	MT/AT	1800	198401	198501	TY-09	43410-20031				
ST150	1S-ILU	MT/AT	1800	198401	198501	TY-09	43410-20031				
ST160	1S-ILU EL	MT/AT	1800	198508	198805	TY-09	43410-20040				
ST170	4S-F	MT/AT	1800	198712	199005	TY-09	43410-20180				
ST170	4S-FI	MT/AT	1800	198805	198908	TY-09	43410-20040				
ST163	4S-FI	MT/AT	1800	198805	198908	TY-09	43410-20040				
ST170	4S-FE	MT/AT	1800	199005	199101	TY-09	43410-20350				
ST170	4S-FE	MT/AT	1800	199101	199211	TY-09	43410-20351				
ST190	4S-FE	MT/AT	1800	199202	199601	TY-09	43410-20540	TYID-5010	43030-32060	TYIP-5001	43040-32040
ST190	4S-FE	MT/AT	1800	199202	199601	TY-25A48	43410-20580	TYID-5010	43030-32060	TYIP-5001	43040-32040
AT211	7A-FE	MT/AT	1800	199601	199709	TY-26A48	43410-20450	TYIU-5009	43403-12040	TYIU-5009	43403-12040
AT211	7A-FE	MT/AT	1800	199710	200201	TY-26A48	43410-20451	TYIU-5009	43403-12040	TYIU-5009	43403-12040
CT151	2C-L	MT/AT	2000	198301	198501	TY-09	43410-22020				
CT150	2C-L	MT/AT	2000	198405	198804	TY-09	43410-12150				
ST162	3S-GE	AT	2000	198501	198801	TY-05	43410-20060				
ST171	3S-GELU	AT	2000	198501	198801	TY-05	43410-20060				
ST162	3S-GE	MT	2000	198501	198801	TY-05	43410-20070				
ST171	3S-GELU	MT	2000	198501	198801	TY-05	43410-20070				
ST162	3S-FE	AT	2000	198508	198908	TY-09	43410-20040				
ST162	3S-FE	MT	2000	198508	198908	TY-09	43410-20050				
ST162	3S-GELU	AT	2000	198508	198908	TY-05	43410-20061				
ST162	3S-GELU	MT	2000	198508	198908	TY-05	43410-20071				
ST171	3S-FE	MT/AT	2000	198712	198908	TY-09	43410-20180				
ST171	3S-GE	AT	2000	198712	198908	TY-05	43410-20061				
ST171	3S-GE	MT	2000	198712	198908	TY-05	43410-20071				
CT170	2C	MT/AT	2000	198712	198908	TY-09	43410-20160				
ST182	3F-FE	MT	2000	198901	199101	TY-12	43410-20240	TYIR-5226	43030-33010	TYIU-5006	43040-20020
ST183	3F-FE	MT	2000	198901	199101	TY-12	43410-20240	TYIR-5226	43030-33010	TYIU-5006	43040-20020
ST182	3F-FE	AT	2000	198901	199101	TY-09	43410-20220				
ST183	3F-FE	AT	2000	198901	199101	TY-09	43410-20220				
ST171	3S-FE	MT/AT	2000	198908	199101	TY-09	43410-20350				
ST171	3S-GE	AT	2000	198908	199101		43410-20370				
ST171	3S-GE	MT	2000	198908	199101		43410-20380				
CT170	2C	MT/AT	2000	198908	199101	TY-09	43410-20340				
ST171	3S-FE	MT/AT	2000	199101	199202	TY-09	43410-20351				
ST171	3S-GE	AT	2000	199101	199202		43410-20371				
ST171	3S-GE	MT	2000	199101	199202		43410-20381				
CT170	2C	MT/AT	2000	199101	199202	TY-09	43410-20341				
ST182	3F-FE	MT	2000	199101	199608	TY-12	43410-20241	TYIR-5226	43030-33010	TYIU-5006	43040-20020
ST183	3F-FE	MT	2000	199101	199601	TY-12	43410-20241	TYIR-5226	43030-33010	TYIU-5006	43040-20020
ST195 4WD	3S-FE	MT/AT	2000	199202	199601	TY-25A48	43410-12410	TYIP-RAV4	43403-12050	TYID-RAV4	43403-12060
CT190	2C	MT/AT	2000	199202	199601	TY-09	43410-20530				
CT190	2C	MT/AT	2000	199202	199601	TY-25A48	43410-20570				
CT195 4WD	2C	MT	2000	199202	199412	TY-09	43410-32141	TYIP-RAV4	43403-12050	TYID-RAV4	43403-12060
CT195 4WD	2C	MT	2000	199202	199412	TY-25A48	43410-32201	TYIP-RAV4	43403-12050	TYID-RAV4	43403-12060
ST190	3S-FE	MT/AT	2000	199202	199411	TY-27A48	43410-05130				
ST190	3S-FE	MT/AT	2000	199202	199411	TY-27A48	43410-05140				
ST191	3S-FE	MT/AT	2000	199202	199601	TY-09	43410-20540	TYID-5010	43030-32060	TYIP-5001	43040-32040
ST191	3S-FE	MT/AT	2000	199202	199601	TY-25A48	43410-20580	TYID-5010	43030-32060	TYIP-5001	43040-32040
ST195 4WD	3S-FE	MT/AT	2000	199202	199601	TY-09	43410-12400	TYIP-RAV4	43403-12050	TYID-RAV4	43403-12060
ST191	3S-FE	4AT	2000	199412	199601		43410-05040				
ST215 4WD	3S-FE	MT/AT	2000	199601	199709	TY-25A48	43410-12410	TYIP-RAV4	43403-12050	TYID-RAV4	43403-12060
CT210	2C-T	MT/AT	2000	199601	199709	TY-25A48	43410-12350				
ST210	3S-FE	4AT	2000	199601	199712	TY-25A48	43410-20580	TYID-5010	43030-32060	TYIP-5001	43040-32040
CT215 4WD	2C-T	5MT	2000	199601	199709	TY-25A48	43410-32201	TYIP-RAV4	43403-12050	TYID-RAV4	43403-12060
ST215 4WD	3S-FE	MT/AT	2000	199608	199709	TY-25A48	43410-12410	TYIP-RAV4	43403-12050	TYID-RAV4	43403-12060
ST210	3S-FSE	4AT	2000	199612	200201	TY-24A48	43410-20251	TYIR-5226	43030-33010	TYIU-5006	43040-20020
CT210	2C-T	MT/AT	2000	199710	199712		43410-12351				
ST215 4WD	3S-FE	MT/AT	2000	199710	199712	TY-25A48	43410-12411	TYIP-RAV4	43403-12050	TYID-RAV4	43403-12060
CT215 4WD	2C-T	5MT	2000	199710	199712	TY-25A48	43410-32202	TYIP-RAV4	43403-12050	TYID-RAV4	43403-12060

TOYOTA

MODEL	ENGINE	AT/MT	CC	YEAR	YEAR	OUTER	O.E No.R	INNER R	O.E No.IR	INNER L	O.E No.IL
CT211	3C-TE	MT/AT	2000	199712	200201		43410-20560				
ST215 4WD	3S-FE	MT/AT	2000	199801	200201		43410-21031	TYIP-RAV4	43403-12050	TYID-RAV4	43403-12060
ST215 4WD	3S-FE	MT/AT	2000	199801	200201		43410-21031	TYIP-RAV4	43403-12050	TYID-RAV4	43403-12060
ST220	3S-FE	MT/AT	2000	199710	200303		43470-09400	TYIP-ST220	43030-05050	TYID-ST220	43040-05030
CT216 4WD	3C-TE	4AT	2200	199712	200201		43410-21041				
CT211	3C-TE	MT/AT	2200	199712	200201		43410-20560				
CT216 4WD	3C-TE	4AT	2200	199712	200201		43410-21041				
CROWN ESTATE											
JZS173W	1JZ-GE	4AT	2500	199912			43410-22010				
CURREN											
ST206	3S-FE	MT/AT	2000	199401	199807	TY-12	43410-20670	TYIR-5226	43030-33010	TYIU-5006	43040-20020
ST206	3S-FE	MT/AT	2000	199401	199807	TY-24A48	43410-20680	TYIR-5226	43030-33010	TYIU-5006	43040-20020
ST206	3S-GE	MT/AT	2000	199401	199807	TY-05	43410-20730				
ST206	3S-GE	MT/AT	2000	199401	199807	TY-20A48	43410-20740				
ST207 4WD	3S-FE	MT/AT	2000	199401	199712	TY-12	43410-20670	TYIR-5226	43030-33010	TYIU-5006	43040-20020
ST207 4WD	3S-FE	MT/AT	2000	199401	199712	TY-24A48	43410-20680	TYIR-5226	43030-33010	TYIU-5006	43040-20020
CYNOS											
EL52	4E-FE	MT/AT	1300	199101	199509	TY-36	43410-16131				
EL52	4E-FE	MT/AT	1300	199101	199509	TY-36	43410-16190				
EL54	5E-FE	MT/AT	1500	199101	199509	TY-36	43410-16190				
EL44	5E-FE FHE	MT/AT	1500	199102	199509	TY-36	43410-16190				
EL44	5E-FE FHE	MT/AT	1500	199102	199509	TY-26A48	43410-16200				
DUET											
M100A	EJ-DE EJ-V	4AT	1000	199809	200005	DH-14	43410-97208				
M100A	EJ-DE /VE	5MT	1000	199809	200005	DH-14	43410-97212				
M110A 4WD	EJ-DE /VE	MT/AT	1000	199809			43410-97213				
M101A	K3-VE	MT/AT	1300	200005			43410-97401				
M101A	K3-VE	MT/AT	1300	200005			43410-97403				
M111A 4WD	K3-VE	MT/AT	1300	200005			43410-97402				
M111A 4WD	K3-VE	MT/AT	1300	200005			43410-97405				
ESTIMA/PREVIA											
TCR21 4WD	2TZ-FE	AT	2400	199005	199912	TY-18	43430-28021	TYIU-557	43403-28010	TYIU-557	43403-28010
TCR21 4WD	2TZ-FE	AT	2400	199005	199912	TY-18A48	43430-28031	TYIU-557	43403-28010	TYIU-557	43403-28010
TCR20 4WD	2TZ-FE	AT	2400	199302	199912	TY-18	43430-28021	TYIU-557	43403-28010	TYIU-557	43403-28010
TCR20 4WD	2TZ-FE	AT	2400	199302	199912	TY-18A48	43430-28031	TYIU-557	43403-28010	TYIU-557	43403-28010
ACR30W	2AZ-FE	4AT	2400	200002		TY-61A48	43410-28030		43030-28010	TYIL-911	43040-28010
ACR40W 4WD	2AZ-FE	4AT	2400	200002		TY-61A48	43410-28040		43030-28010	TYIL-911	43040-28010
ACR30W	2AZ-FE	4AT	2400	200002		TY-61A48	43410-28030		43030-28010	TYIL-911	43040-28010
ACR40W 4WD	2AZ-FE	4AT	2400	200002		TY-61A48	43410-28040		43030-28010	TYIL-911	43040-28010
MCR30W	1MZ-FE	4AT	3000	199912	200105	TY-18A48	43410-28050		43409-28010		43409-28010
MCR40W	1MZ-FE	4AT	3000	199912	200105	TY-18A48	43410-28060		43409-28010		43409-28010
MCR30W	1MZ-FE	4AT	3000	199912		TY-60A48	43410-28051		43409-28010		43409-28010
MCR40W 4WD	1MZ-FE	4AT	3000	199912		TY-60A48	43410-28061		43409-28010		43409-28010
MCR30W	1MZ-FE	4AT	3000	200105		TY-60A48	43410-28051		43409-28010		43409-28010
MCR40W 4WD	1MZ-FE	4AT	3000	200105		TY-60A48	43410-28061		43409-28010		43409-28010
MCR30W	1MZ-FE	4AT	3000	200304		TY-910A48	43410-58010		43409-28010		43409-28010
CORONA EXIV/CARINA ED											
ST180	4S-F	MT/AT	1800	198909	199108	TY-09	43410-20220				
ST180	4S-F	MT/AT	1800	198909	199108	TY-09	43410-20230				
ST181 4WD	4S-F	MT/AT	1800	198909	199108	TY-09	43410-20220				
ST181 4WD	4S-F	MT/AT	1800	198909	199108	TY-25A48	43410-20230				
ST180	4S-F	MT/AT	1800	199108	199309	TY-09	43410-20221				
ST180	4S-F	MT/AT	1800	199108	199309	TY-25A48	43410-20231				
ST181 4WD	4S-F	MT/AT	1800	199108	199309	TY-09	43410-20221				
ST181 4WD	4S-F	MT/AT	1800	199108	199309	TY-25A48	43410-20231				
ST200	4S-FE	MT/AT	1800	199309	199508	TY-09	43410-20720				
ST200	4S-FE	MT/AT	1800	199309	199508	TY-25A48	43410-20610				
ST201 4WD	4S-FE	MT/AT	1800	199309	199910	TY-09	43410-20720				
ST201 4WD	4S-FE	MT/AT	1800	199309	199410	TY-25A48	43410-20610				
ST202	3S-GE	MT/AT	2000	192309	199508	TY-05	43410-20730				
ST182	3S-FE	AT	2000	198909	199108	TY-09	43410-20220				
ST182	3S-FE	AT	2000	198909	199108	TY-25A48	43410-20230				
ST182	3S-FE	MT/AT	2000	198909	199308	TY-12	43410-20241	TYIR-5226	43030-33010	TYIU-5006	43040-20020
ST182	3S-GE	AT	2000	198909	199308	TY-05	43410-20281				
ST182	3S-GE	AT	2000	198909	199308		43410-20291				
ST182	3S-GE	MT	2000	198909	199308	TY-05	43410-20301				
ST182	3S-GE	MT	2000	198909	199308		43410-20311				
ST183 4WD	3S-FE	AT	2000	198909	199108	TY-09	43410-20220				
ST183 4WD	3S-FE	AT	2000	198909	199108	TY-25A48	43410-20230				
ST183 4WD	3S-FE	MT/AT	2000	198909	199309	TY-24A48	43410-20251				
ST183 4WD	3S-FE	MT/AT	2000	198909	199309	TY-12	43410-20241				
ST183 4WD	3S-GE	AT	2000	198909	199308	TY-05	43410-20281				
ST183 4WD	3S-GE	AT	2000	198909	199308		43410-20291				
ST183 4WD	3S-GE	MT	2000	198909	199308	TY-05	43410-20301				
ST183 4WD	3S-GE	MT	2000	198909	199308		43410-20311				
ST182	3S-FE	AT	2000	199108	199309	TY-24A48	43410-20251	TYIR-5226	43030-33010	TYIU-5006	43040-20020
ST202	3S-FE	MT/AT	2000	199309	199508	TY-12	43410-20670	TYIR-5226	43030-33010	TYIU-5006	43040-20020
ST202	3S-FE	MT/AT	2000	199309	199508	TY-24A48	43410-20680	TYIR-5226	43030-33010	TYIU-5006	43040-20020
ST202	3S-GE	MT/AT	2000	199309	199508	TY-20A48	43410-20740				
ST203 4WD	3S-FE	MT/AT	2000	199309	199508	TY-12	43410-20670				
ST203 4WD	3S-FE	MT/AT	2000	199309	199508	TY-24A48	43410-20680				
ST205 4WD	3S-GE	MT/AT	2000	199309	199804		43410-20550	TYIP-RAV4	43403-12050	TYID-RAV4	43403-12060
ST205 4WD	3S-GE	MT/AT	2000	199309	199804		43410-20590	TYIP-RAV4	43403-12050	TYID-RAV4	43403-12060
FUNCARGO											

TOYOTA

MODEL	ENGINE	AT/MT	CC	YEAR	YEAR	OUTER	O.E No.R	INNER R	O.E No.IR	INNER L	O.E No.IL
NCP20	2NZ-FE	4AT	1300	199908		TY-68	43410-52020	TYIU-YAR13	43403-16020	TYIU-YAR13	43403-16020
NCP20	2NZ-FE	4AT	1300	199908		TY-35	43410-52070	TYIU-YAR13	43403-16020	TYIU-YAR13	43403-16020
NCP20	2NZ-FE	4AT	1300	199908		TY-35A48	43460-59045	TYIU-YAR15	43403-10011	TYIU-YAR15	43403-10011
NCP21	1NZ-FE	4AT	1500	199908		TY-35A48	43460-59045	TYIU-YAR15	43403-10011	TYIU-YAR15	43403-10011
NCP21	1NZ-FE	4AT	1500	199908		TY-35	43410-52070	TYIU-YAR15	43403-10011	TYIU-YAR15	43403-10011
NCP25	1NZ-FE	4AT	1500	199908		TY-35	43410-52030			TYIU-5009	43403-12040
GAIA											
SXM10	3S-FE	4AT	2000	199805		TY-25A48	43410-20581	TYID-5010	43030-32060	TYIP-5001	43040-32040
SXM15 4WD	3S-FE	4AT	2000	199805			43410-21031				
CXM10	3C-TE	4AT	2200	199805		TY-25A48	43410-44021				
HARRIER/LEXUS RX											
SXU10	5S-FE	4AT	2200	199712	200011	TY-304A48	43410-48030			TYIU-HR	43040-48010
SXU15 4WD	5S-FE	4AT	2200	199712	200011	TY-304A48	43410-48010	TYIU-GXR	42360-30040	TYIU-GXR	42360-30040
SXU15 4WD	5S-FE	4AT	2200	199712	200011	TY-304A48	43410-48010			TYIU-HR	43040-48010
XU10W	5S-FE	4AT/I	2200	199904	200011	TY-304A48	43410-48030				
XU15W 4WD	5S-FE	4AT/I	2200	199904	200011	TY-304A48	43410-48010			TYIU-HR	43040-48010
CU10W	2AZ-FE	4AT/I	2400	200011	200302	TY-304A48	43410-48040				
CU15W 4WD	2AZ-FE	4AT/I	2400	200011	200302	TY-304A48	43410-48010				
MCU10	1MZ-FE	4AT	3000	199712			43410-48020				
MCU15 4WD	1MZ-FE	4AT	3000	199712		TY-304A48	43410-48010	TYIU-GXR	42360-30040	TYIU-GXR	42360-30040
MCU15 4WD	1MZ-FE	4AT	3000	199712		TY-304A48	43410-48010				
CU10W	1MZ-FE	4AT/I	3000	199904	200008	TY-66A48	43410-33200				
CU15W 4WD	1MZ-FE	4AT/I	3000	199904	200302	TY-304A48	43410-48010				
CU10W	1MZ-FE	4AT/I	3000	200009	200302	TY-66A48	43410-33202				
ACU30W	2AZ-FE	4AT/F	2400	200302		TY-909A48	43410-48071	TYIP-R4	43030-42020	TYID-R4	43040-42020
ACU35W 4WD	2AZ-FE	4AT/F	2400	200302		TY-909A48	43410-48061	TYIP-R4	43030-42020	TYID-R4	43040-42020
MCU30W	1MZ-FE	5AT/F	3000	200302		TY-910A48	43410-58010				
MCU31W	1MZ-FE	5AT/F	3000	200302		TY-60A48	43410-33230				
MCU35W 4WD	1MZ-FE	5AT/F	3000	200302		TY-909A48	43410-48050	TYIP-R4	43030-42020	TYID-R4	43040-42020
MCU36W 4WD	1MZ-FE	5AT/F	3000	200302		TY-909A48	43410-48050	TYIP-R4	43030-42020	TYID-R4	43040-42020
HIACE REGIUS											
RCH47 4WD	3RZ-FE	4AT	2700	199704		TY-14	43430-26040/1				
HIACE											
LH85 4WD	2L	MT	2400	198710	199505		43430-26012				
LH85 4WD	2L	5MT	2400	198710	199505	TY-14	43460-29067	TYIU-5013	43403-35020	TYIU-5013	43403-35020
LH95 4WD	2L	5MT	2400	199109	199505	TY-14	43460-29067	TYIU-5013	43403-35020	TYIU-5013	43403-35020
LN165 4WD	2L-TE	4AT	2400	199709		TY-14	43430-35021	TYIU-5013	43403-35020	TYIU-5013	43403-35020
LN165 4WD	2L-TE	4AT	2400	199709		TY-14	43430-35012	TYIU-5013	43403-35020	TYIU-5013	43403-35020
LH129 4WD	3L	MT/AT	2800	198908	199508	TY-14	43430-26013	TYIU-5013	43403-35020	TYIU-5013	43403-35020
LH109 4WD	3L	5MT	2800	198908		TY-14	43460-29067	TYIU-5013	43403-35020	TYIU-5013	43403-35020
LH119 4WD	3L	MT/AT	2800	198908		TY-14	43460-29067	TYIU-5013	43403-35020	TYIU-5013	43403-35020
LH107 4WD	3L	MT/AT	2800	198908		TY-14	43460-29067	TYIU-5013	43403-35020	TYIU-5013	43403-35020
LY151 4WD	3L	5MT	2800	199505		TY-14	43460-29067	TYIU-5013	43403-35020	TYIU-5013	43403-35020
LY161 4WD	3L	5MT	2800	199505		TY-14	43460-29067	TYIU-5013	43403-35020	TYIU-5013	43403-35020
LH129 4WD	3L	MT/AT	2800	199508		TY-14	43430-26021	TYIU-5013	43403-35020	TYIU-5013	43403-35020
HILUX SURF/4 RUNNER											
YN130 4WD	3Y-E	MT/AT	2000	198904	199108	TY-14	43430-35011	TYIU-5013	43403-35010	TYIU-5013	43403-35010
LN130 4WD	2L-T	MT/AT	2400	198904	199308	TY-14	43430-35011	TYIU-5013	43403-35010	TYIU-5013	43403-35010
N185W 4WD	1KD-FTV	4AT/F	3000	200008	200211	TY-38	43430-35030	TYIU-5020	43403-35030	TYIU-5020	43403-35030
N185W 4WD	1KZ-TE	4AT/F	3000	199511	200008	TY-38	43430-35030	TYIU-5020	43403-35030	TYIU-5020	43403-35030
N185W 4WD	1KZ-TE	5MT/F	3000	199511	200008	TY-38	43430-35030	TYIU-5020	43403-35030	TYIU-5020	43403-35030
N185W 4WD	3RZ-FE	4AT/F	2700	199511	200211	TY-38	43430-35030	TYIU-5020	43403-35030	TYIU-5020	43403-35030
N185W 4WD	3RZ-FE	5MT/F	2700	199511	200008	TY-38	43430-35030	TYIU-5020	43403-35030	TYIU-5020	43403-35030
N185W 4WD	5VZ-FE	4AT/F	3400	199511	200211	TY-38	43430-35030	TYIU-5020	43403-35030	TYIU-5020	43403-35030
N215W 4WD	1KD-FTV	4AT/F	3000	200211		TY-67	43430-60060	TYIU-P120	43403-60020	TYIU-P120	43403-60020
N215W 4WD	3RZ-FE	4AT/F	2700	200211		TY-67	43430-60060	TYIU-P120	43403-60020	TYIU-P120	43403-60020
N215W 4WD	5VZ-FE	4AT/F	3400	200211		TY-67	43430-60060	TYIU-P120	43403-60020	TYIU-P120	43403-60020
HILUX											
YN60 4WD	3Y-J	MT/AT	2000	198301	198801	TY-06	43405-60015				
YN60 4WD	3Y-J	MT/AT	2000	198301	198801	TY-06	43405-60016				
YN65 4WD	3Y-J	MT/AT	2000	198301	198801	TY-06	43405-60015				
YN65 4WD	3Y-J	MT/AT	2000	198301	198801	TY-06	43405-60016				
YN100 4WD	3Y	MT	2000	198809	199408	TY-14	43430-35011	TYIU-5013	43403-35010	TYIU-5013	43403-35010
YN105 4WD	3Y	MT	2000	198809	199108	TY-14	43430-35011	TYIU-5013	43403-35010	TYIU-5013	43403-35010
YN107 4WD	3Y	MT	2000	199108	199709	TY-14	43430-35011	TYIU-5013	43403-35010	TYIU-5013	43403-35010
RZN167 4WD	1RZ-E	5MT	2000	199709		TY-14	43430-35021	TYIU-5013	43403-35020	TYIU-5013	43403-35020
RZN167 4WD	1RZ-E	5MT	2000	199709		TY-14	43430-35012	TYIU-5013	43403-35020	TYIU-5013	43403-35020
LN60 4WD	2L	MT/AT	2400	198301	198801	TY-06	43405-60015				
LN60 4WD	2L	MT/AT	2400	198301	198801	TY-06	43405-60016				
LN61 4WD	2L-5	MT/AT	2400	198301	198801	TY-06	43405-60015				
LN61 4WD	2L-5	MT/AT	2400	198301	198801	TY-06	43405-60016				
N170 4WD	2L-TE	4AT	2500	199711		TY-14	43430-35021	TYIU-5013	43403-35020	TYIU-5013	43403-35020
N170 4WD	2L-TE	4AT	2500	199711		TY-14	43430-35012	TYIU-5013	43403-35020	TYIU-5013	43403-35020
LN100 4WD	3L	MT/AT	2800	198801		TY-06	43405-60015				
LN100 4WD	3L	MT/AT	2800	198801		TY-06	43405-60016				
LN106 4WD	3L	MT/AT	2800	198801		TY-06	43405-60015				
LN106 4WD	3L	MT/AT	2800	198801		TY-06	43405-60016				
LN100 4WD	3L	MT	2800	198809	199408	TY-14	43430-35011	TYIU-5013	43403-35010	TYIU-5013	43403-35010
LN106 4WD	3L	MT	2800	198809	199108	TY-14	43430-35011	TYIU-5013	43403-35010	TYIU-5013	43403-35010
LN131 4WD	3L	MT	2800	198904	199308	TY-14	43430-35011	TYIU-5013	43403-35010	TYIU-5013	43403-35010
LN107 4WD	3L	MT	2800	199108	199709	TY-14	43430-35011	TYIU-5013	43403-35010	TYIU-5013	43403-35010
VZN130 4WD	3VZ-E	MT/AT	3000	199008	199108	TY-14	43430-35011	TYIU-5013	43403-35010	TYIU-5013	43403-35010
KZN130 4WD	1KZ-TE	MT/AT	3000	199308	199512	TY-14	43430-35011	TYIU-5013	43403-35010	TYIU-5013	43403-35010
LN167 4WD	5L	5MT	3000	199709		TY-14	43430-35021	TYIU-5013	43403-35020	TYIU-5013	43403-35020

TOYOTA

MODEL	ENGINE	AT/MT	CC	YEAR	YEAR	OUTER	O.E No.R	INNER R	O.E No.IR	INNER L	O.E No.IL
LN167 4WD	5L	5MT	3000	199709		TY-14	43430-35012	TYIU-5013	43403-35020	TYIU-5013	43403-35020
LN167 4WD	5L	5MT	3000	199709		TY-14	43430-35012	TYIU-5013	43403-35020	TYIU-5013	43403-35020
N172 4WD	5L	5MT	3000	199711		TY-14	43430-35021	TYIU-5013	43403-35020	TYIU-5013	43403-35020
N172 4WD	5L	5MT	3000	199711		TY-14	43430-35012	TYIU-5013	43403-35020	TYIU-5013	43403-35020
IST											
NCP60	2NZ-FE	4AT	1300	200204		TY-35A48	43460-59045	TYIU-YAR13	43403-16020	TYIU-YAR13	43403-16020
NCP65	2NZ-FE	4AT	1300	200204		TY-35A48	43410-52031			TYIU-5009	43403-12040
NCP61	1NZ-FE	4AT	1500	200204		TY-35A48	43460-59045	TYIU-YAR15	43403-10011	TYIU-YAR15	43403-10011
IPSUM/PICNIC/AVENSIS VERSO											
SXM10	3S-FE	4AT	2000	199605	200105	TY-25A48	43410-20581	TYID-5010	43030-32060	TYIP-5001	43040-32040
SXM15 4WD	3S-FE	4AT	2000	199605	199804	TY-25A48	43410-12411	TYIP-RAV4	43403-12050	TYID-RAV4	43403-12060
SXM15 4WD	3S-FE	4AT	2000	199805	200105		43410-21031	TYIP-RAV4	43403-12050	TYID-RAV4	43403-12060
CXM10	3C-TE	4AT	2200	199709	200105	TY-25A48	43410-44021				
ACM21W	2AZ-FE	4AT/C	2400	200105		TY-909A48	43410-44040	TYIR-911	43030-44020	TYIL-911	43040-28010
ACM26W 4WD	2AZ-FE	4AT/C	2400	200105		TY-909A48	43410-44050				
GRAND HIACE											
KCH16W 4WD	1KZ-TE	4AT/C	3000	199907	200204	TY-14	43430-26032				
GRANVIA											
KCH16W 4WD	1KZ-TE	4AT/C	3000	199708	200204	TY-14	43430-26032				
VCH16W 4WD	5VZ-FE	4AT/C	3400	199708	200204	TY-14	43430-26032				
VCH16W 4WD	5VZ-FE	4AT/C	3400	199907	200204	TY-14	43430-26032				
KLUGER V/HIGHLANDER											
ACU20W	2AZ-FE	4AT	2400	200011			43410-48070			TYIL-911	43040-28010
ACU25W 4WD	2AZ-FE	4AT	2400	200011			43410-48060	TYIP-R4	43030-42020	TYID-R4	43040-42020
MCU20W	1MZ-FE	4AT	3000	200011	200105	TY-18A48	43410-28050				
MCU25W 4WD	1MZ-FE	4AT	3000	200011			43410-48050	TYIP-R4	43030-42020	TYID-R4	43040-42020
MCU20W	1MZ-FE	4AT	3000	200105		TY-910A48	43410-58010				
LAND CRUISER/LEXUS LX470											
LJ71 4WD	2L	MT/AT	2400	198510	199004	TY-06	43405-60015				
LJ71 4WD	2L	MT/AT	2400	198510	199004	TY-06	43405-60016				
LJ71 4WD	2L	MT/AT	2400	199001	199305	TY-06	43405-60040				
LJ71 4WD	2L-TE	MT/AT	2400	199004		TY-06	44305-60040				
LJ78 4WD	2L-TE	MT/AT	2400	199004		TY-06	44305-60040				
LJ78 4WD	2L	MT/AT	2400	199004	199605	TY-06	43405-60040				
BJ70 4WD	3B	MT	3400	198411	199001	TY-06	43405-60016				
BJ73 4WD	3B	MT	3400	198411	199001	TY-06	43405-60016				
BJ71 4WD	13B-T	MT	3400	198501	199001	TY-06	43405-60016				
BJ74 4WD	13B-T	MT/AT	3400	198501	199001	TY-06	43405-60016				
BJ70 4WD	3B	MT	3400	198511	198708	TY-06	43405-60015				
PZJ70 4WD	1PZ	MT	3500	199001		TY-06	44305-60040				
PZJ77	1PZ	MT	3500	199001		TY-06	44305-60040				
HZJ77 4WD	1PZ	MT	3500	199001		TY-06	44305-60040				
PZJ70 4WD	1PZ	MT	3500	199001	199401	TY-06	43405-60040				
PZJ77 4WD	1PZ	MT	3500	199001	199401	TY-06	43405-60040				
FJ60 4WD	2H	MT/AT	4000	198708		TY-06	43405-60016				
HJ61 4WD	12H-T	MT/AT	4000	198708		TY-06	43405-60016				
FJ62 4WD	3F	MT	4000	198708		TY-06	43405-60016				
HJ62 4WD	2H	MT/AT	4000	198708		TY-06	43405-60016				
HJ60 4WD	12H-T	MT/AT	4000	198708		TY-06	43405-60016				
J80G	3F-E	MT/AT	4000	198910	199208	TY-15	43405-60050				
J80G	3F-E	MT/AT	4000	198910	199208	TY-15A48	43405-60070				
J81 4WD	1HZ-T	MT/AT	4200	198910	199402	TY-15A48	43405-60070				
J80 4WD	1HD-F	MT/AT	4200	199404		TY-15A48	43405-60070				
J80G 4WD	1FZ-FE	MT/AT	4500	199208	199801	TY-15A48	43405-60070				
J80G	3F-E	MT/AT	4000	198910	199208	TY-30	43405-60070				
HZJ73 4WD	1HZ	MT/AT	4000	199001		TY-11	44305-60040				
HZJ77 4WD	1HZ	MT/AT	4000	199001		TY-11	44305-60040				
J81 4WD	1HZ-T	MT/AT	4200	198910	199402	TY-15	43405-60050				
J81 4WD	1HZ-T	MT/AT	4200	198910	199402	TY-30	43405-60070				
J80 4WD	1HD-T	MT/AT	4200	199001		TY-15	44305-60050				
J80 4WD	1HZ	MT/AT	4200	199001		TY-15	44305-60030				
HZJ73 4WD	1HZ	MT/AT	4200	199004		TY-11	43405-60040				
HZJ77 4WD	1HZ	MT/AT	4200	199004		TY-11	43405-60040				
J80 4WD	1HD-F	MT/AT	4200	199403		TY-30A48	43405-60080				
J80 4WD	1HD-F	MT/AT	4200	199404		TY-30	43405-60070				
HDJ101 4WD	1HD-FTE	MT/AT	4200	199801		TY-101	43430-60020				
FZJ105 4WD	1HZ	MT/AT	4200	199801		TY-58	43405-60100				
FZJ105 4WD	1HZ	MT/AT	4200	199801		TY-58	43405-60110				
FZJ105 4WD	1HZ	MT/AT	4200	199801		TY-57	43405-60120				
FZJ71	1HZ	MT/AT	4200	199908		TY-58	43405-60100				
FZJ74	1HZ	MT/AT	4200	199908		TY-58	43405-60100				
FZJ78	1HZ	MT/AT	4200	199908		TY-58	43405-60100				
FZJ79	1HZ	MT/AT	4200	199908		TY-58	43405-60100				
J80G 4WD	1FZ-FE	MT/AT	4500	199208	199801	TY-15	44305-60030				
J80G 4WD	1FZ-FE	MT/AT	4500	199208	199801	TY-15	44305-60050				
J80G 4WD	1FZ-FE	MT/AT	4500	199208	199801	TY-30	44305-60070				
J80G 4WD	1FZ-FE	MT/AT	4500	199402	199801	TY-30A48	43405-60080				
HZJ105 4WD	1FZ-FE	MT/AT	4500	199801		TY-58	43405-60100				
HZJ105 4WD	1FZ-FE	MT/AT	4500	199801		TY-58	43405-60110				
HZJ105 4WD	1FZ-FE	MT/AT	4500	199801		TY-57	43405-60120				
HZJ71	1FZ-F	MT/AT	4500	199908		TY-58	43405-60100				
HZJ78	1FZ-F	MT/AT	4500	199908		TY-58	43405-60100				
HZJ79	1FZ-F	MT/AT	4500	199908		TY-58	43405-60100				
UZJ100 4WD	2UZ-FE	4AT	4700	199801		TY-101	43430-60020				

TOYOTA

MODEL	ENGINE	AT/MT	CC	YEAR	YEAR	OUTER	O.E No.R	INNER R	O.E No.IR	INNER L	O.E No.IL
HDJ101K 4WD	1HD-FTE	MT/AT	4700	199801		TY-101	43430-60040				
HDJ101K 4WD	1HD-FTE	MT/AT	4700	199801		TY-101	43430-60020				
UZJ100W 4WD	2UZ-FE	MT/AT	4700	199801		TY-101	43430-60040				
UZJ100W 4WD	2UZ-FE	MT/AT	4700	199801		TY-101	43430-60020				
LAND CRUISER PRADO											
J120W 4WD	3RZ-FE	4AT/F	2700	200210		TY-67	43430-60060	TYIU-P120	43403-60020	TYIU-P120	43403-60020
J125W 4WD	3RZ-FE	4AT/F	2700	200210		TY-67	43430-60060	TYIU-P120	43403-60020	TYIU-P120	43403-60020
J95W	1KZ-TE	MT/AT	3000	199605	200210	TY-38	43430-35030	TYIU-5020	43403-35030	TYIU-5020	43403-35030
J90W	1KZ-TE	MT/AT	3000	199605	200210	TY-38	43430-35030	TYIU-5020	43403-35030	TYIU-5020	43403-35030
J90W	1KZ-TE	MT/AT	3000	199605	200210	TY-38	43460-39065	TYIU-5020	43403-35030	TYIU-5020	43403-35030
J95W	1KZ-TE	MT/AT	3000	199605	200210	TY-38	43460-39065	TYIU-5020	43403-35030	TYIU-5020	43403-35030
J120W 4WD	1KD-FTV	4AT/F	3000	200210		TY-67	43430-60060	TYIU-P120	43403-60020	TYIU-P120	43403-60020
J121W 4WD	1 KD-FTV	4AT/F	3000	200210		TY-67	43430-60060	TYIU-P120	43403-60020	TYIU-P120	43403-60020
J125W 4WD	1 KD-FTV	4AT/F	3000	200210		TY-67	43430-60060	TYIU-P120	43403-60020	TYIU-P120	43403-60020
J90W	5VZ-FE	MT/AT	3400	199605	200210	TY-38	43430-35030	TYIU-5020	43403-35030	TYIU-5020	43403-35030
J90W	5VZ-FE	MT/AT	3400	199605	200210	TY-38	43460-39065	TYIU-5020	43403-35030	TYIU-5020	43403-35030
J95W	5VZ-FE	4AT	3400	199605	200210	TY-38	43430-35030	TYIU-5020	43403-35030	TYIU-5020	43403-35030
J95W	5VZ-FE	4AT	3400	199605	200210	TY-38	43460-39065	TYIU-5020	43403-35030	TYIU-5020	43403-35030
KZJ-95W 4WD	1KZ-TE	MT/AT	3000	199604	200008	TY-38	43430-35030	TYIU-5020	43403-35030	TYIU-5020	43403-35030
J121W 4WD	5VZ-FE	4AT/F	3400	200210		TY-67	43430-60060	TYIU-P120	43403-60020	TYIU-P120	43403-60020
J125W 4WD	5VZ-FE	4AT/F	3400	200210		TY-67	43430-60060	TYIU-P120	43403-60020	TYIU-P120	43403-60020
LITEACE/TOWNACE											
YM60 4WD	2Y	MT	1800	198610	199008	TY-59	43430-28011				
KM80 4WD	7K-E	5MT	1800	199906			43410-27020				
KM80 4WD	7K-E	5MT	1800	199906			43410-27010				
KM85 4WD	7K-E	5MT	1800	199906			43410-27020				
KM85 4WD	7K-E	5MT	1800	199906			43410-27010				
YR30G 4WD	3Y-EU	MT/AT	2000	198510		TY-59	43430-28011				
YM40G 4WD	3Y-U	MT/AT	2000	198510	199201	TY-59	43430-28011				
CR30G 4WD	2C-T	MT/AT	2000	198510	199309	TY-59	43430-28011				
CR36V 4WD	2C	MT/AT	2000	198510		TY-59	43430-28011				
CM40G 4WD	2C-T	MT/AT	2000	198510	199201	TY-59	43430-28011				
CM41V 4WD	2C	MT	2000	198510	199201	TY-59	43430-28011				
CM60 4WD	2C	MT	2000	198610	198708	TY-59	43430-28011				
CM65 4WD	2C	MT	2000	198610	198708	TY-59	43430-28011				
CM60 4WD	2C	5MT	2000	198610	198708	TY-59	43430-28011				
CR37G 4WD	2C-T	MT/AT	2000	198708	199309	TY-59	43430-28011				
CR36V 4WD	2C	MT/AT	2000	199201	199610	TY-59	43460-29057				
SR50 4WD	3S-FE	4AT	2000	199610		TY-18	43410-28010				
SR50 4WD	3S-FE	MT/AT	2000	199610		TY-18A48	43410-28020				
CR51 4WD	2C	4AT	2000	199611	199812	TY-18	43410-28010				
CR51 4WD	2C	MT/AT	2000	199611	199812	TY-18A48	43410-28020				
CR31 4WD	3C-T	MT/AT	2200	199309	199610	TY-59	43430-28011				
CR38 4WD	3C-T	MT/AT	2200	199309	199610	TY-59	43430-28011				
CR50 4WD	3C-T	4AT	2200	199610		TY-18	43410-28010				
CR50 4WD	3C-T	MT/AT	2200	199610		TY-18A48	43410-28020				
CM80 4WD	3C-E	MT/AT	2200	199906			43410-27020				
CM80 4WD	3C-E	MT/AT	2200	199906			43410-27010				
CM85 4WD	3C-E	MT/AT	2200	199906			43410-27020				
CM85 4WD	3C-E	MT/AT	2200	199906			43410-27010				
LUCIDA/EMINA											
CXR20 4WD	3C-T TE	MT/AT	2200	199201	199308	TY-18	43430-28040	TYIU-557	43403-28010	TYIU-557	43403-28010
CXR20 4WD	3C-T TE	MT/AT	2200	199201	199308	TY-18A48	43430-28050	TYIU-557	43403-28010	TYIU-557	43403-28010
CXR21 4WD	3C-T TE	MT/AT	2200	199201	199308	TY-18	43430-28040	TYIU-557	43403-28010	TYIU-557	43403-28010
CXR21 4WD	3C-T TE	MT/AT	2200	199201	199308	TY-18A48	43430-28050	TYIU-557	43403-28010	TYIU-557	43403-28010
TCR20 4WD	2TZ-FE	MT/AT	2400	199201	199912	TY-18	43430-28040	TYIU-557	43403-28010	TYIU-557	43403-28010
TCR20 4WD	2TZ-FE	MT/AT	2400	199201	199912	TY-18A48	43420-28050	TYIU-557	43403-28010	TYIU-557	43403-28010
TCR21 4WD	2TZ-FE	MT/AT	2400	199201	199610	TY-18	43430-28040	TYIU-557	43403-28010	TYIU-557	43403-28010
TCR21 4WD	2TZ-FE	MT/AT	2400	199201	199610	TY-18A48	43430-28050	TYIU-557	43403-28010	TYIU-557	43403-28010
MARK II QUALIS											
SXV20	5S-FE	4AT	2200	199704	200202	TY-12A48	43410-33020	TYIR-5226	43030-33010	TYIU-5006	43040-20020
SXV25 4WD	5S-FE	4AT	2200	199706	200202		43410-33110				
MCV21	2MZ-FE	4AT	2500	199704	200202	TY-13A48	43410-33070				
MCV25 4WD	2MZ-FE	4AT	2500	199706	200202	TY-13A48	43410-33120				
MCV20	1MZ-FE	4AT	3000	199704	200202	TY-13A48	43410-33070				
MARK II/CRESTA/CHASER											
GX90	1G-FE	AT	2000	199210	199608	TY-GXA48	42370-29175				
GX93 4WD	1G-FE	AT	2000	199210	199608	TY-GXWA48	43410-22010				
JZX100	1G-FE	AT	2000	199609	200009	TY-GXA48	42370-29175	TYIU-GXR	42360-30040	TYIU-GXR	42360-30040
GX105 4WD	1G-FE	AT	2000	199609	200009	TY-GXWA48	43410-22010				
GX115 4WD	1G-FE	AT	2000	200010	200411	TY-GXWA48	43410-22010				
JZX8	1JZ-GE	AT	2500	199008	199210			TYIU-ARR	43409-30030	TYIU-ARR	43409-30030
JZX90	1JZ-GE	AT	2500	199210	199608			TYIU-ARR	43409-30030	TYIU-ARR	43409-30030
JZX93 4WD	1JZ-GE	AT	2500	199210	199608	TY-GXWA48	43410-22010				
JZX100	1JZ-GE	AT	2500	199609	200009			TYIU-ARR	43409-30030	TYIU-ARR	43409-30030
JZX105 4WD	1JZ-GE	AT	2500	199609	200009	TY-GXWA48	43410-22010				
JZX115 4WD	1JZ-GE	AT	2500	200010	200411	TY-GXWA48	43410-22010				
JZX90	2JZ-GE	AT	3000	199210	199608			TYIU-ARR	43409-30030	TYIU-ARR	43409-30030
JZX100	2JZ-GE	AT	3000	199609	200009			TYIU-ARR	43409-30030	TYIU-ARR	43409-30030
JZX110	1JZ-GE	AT	3000	200010	200607			TYIU-ARR	43409-30030	TYIU-ARR	43409-30030
NADIA											
SXN10	3S-FSE	4AT	2000	199807		TY-25A48	43410-20581	TYID-5010	43030-32060	TYIP-5001	43040-32040
SXN10	3S-FE	4AT	2000	199807		TY-25A48	43410-20581	TYID-5010	43030-32060	TYIP-5001	43040-32040
SXN15 4WD	3S-FE	4AT	2000	199807			43410-21031				

TOYOTA

MODEL	ENGINE	AT/MT	CC	YEAR	YEAR	OUTER	O.E No.R	INNER R	O.E No.IR	INNER L	O.E No.IL
OPA											
ZCT10	1ZZ-FE	4AT	1800	200004		TY-54	43410-32301				
ZCD15	1ZZ-FE	4AT	1800	200004		TY-54	43410-12530				
ACTIO	1AZ-FSE	CVT	2000	200008		TY-54	43410-32301				
PASSO											
KGC10	1KR-FE	4AT/C	1000	200405		TY-75	43410-B1010				
KGC15 4WD	1KR-FE	4AT/C	1000	200405		TY-75	43410-B1030				
QNC10	K3-VE	4AT/C	1300	200412		TY-76	43410-B1020				
QNC10	K3-VE	4AT/C	1300	200405		TY-76	43410-B1020				
PLATZ/ECHO											
SCP11	1SZ-FE	MT/AT	1000	199908		TY-40	43460-59015				
SCP11	1SZ-FE	MT/AT	1000	199908		TY-73A48	43410-52110	TYIU-YAR10	43030-52020	TYIU-YAR10	43030-52020
SCP11	1SZ-FE	MT/AT	1000	199908		TY-40A48	43460-59025				
SCP11	1SZ-FE	MT/AT	1000	199908		TY-40	43410-52050				
SCP11	1SZ-FE	MT/AT	1000	199908		TY-40	43410-52040				
NCP10	2NZ-FE	MT/AT	1000	199908		TY-42	43460-59055				
NCP10	2NZ-FE	MT/AT	1000	199908		TY-42	43410-52010				
NCP10	2NZ-FE	MT/AT	1300	199901		TY-42	43410-52010				
NCP16 4WD	2NZ-FE	MT/AT	1300	199908		TY-35	43410-52030				
NCP16	2NZ-FE	MT/AT	1300	199908		TY-35	43410-52030				
NCP12	1NZ-FE	MT/AT	1500	199908		TY-35	43410-52070	TYIU-YAR13	43403-16020	TYIU-YAR13	43403-16020
NCP12	1NZ-FE	MT/AT	1500	199908		TY-35A48	43460-59045	TYIU-YAR13	43403-16020	TYIU-YAR13	43403-16020
NCP16	2NZ-FE	MT/AT	1500	199908		TY-35A48	43460-59076				
NCP16	2NZ-FE	MT/AT	1500	199908		TY-35A48	43460-59485				
PORTE											
NNP10	2NZ-FE	AT	1300	200407		TY-35	43410-52070	TYIU-YAR15	43403-10011	TYIU-YAR15	43403-10011
NNP15	2NZ-FE	MT/AT	1300	200601		TY-35	43410-52031			TYIU-5009	43403-12040
NNP11	1NZ-FE	AT	1500	200407		TY-35	43410-52070	TYIU-YAR15	43403-10011	TYIU-YAR15	43403-10011
PREMIO/ALLION											
NZT240	1NZ-FE	AT	1500	200112		TY-54	43410-12490	TYIU-YAR15	43403-10011	TYIU-YAR15	43403-10011
ZZT240	1ZZ-FE	AT	1800	200112		TY-55A48	43410-32302	TYID-5010	43030-32060	TYIP-5001	43040-32040
ZZT245	1ZZ-FE	AT	1800	200112		TY-55A48	43410-12531			TYIP-5001	43040-32040
PRIUS											
NHW10	1NZ-FXE	AT	1500	199712			43410-47010				
NHW10	1NZ-FXE	AT	1500	199712			43460-49036				
HW20	1NZ-FXE	CVT/I	1500	200308		TY-77A48	43410-47020				
PROBOX/SUCCEED											
NCP50	2NZ-FE	MT/AT	1300	200206		TY-35	43410-52070	TYIU-YAR15	43403-10011	TYIU-YAR15	43403-10011
NLP51	1ND-TV	MT/AT	1400	200207		TY-35	43410-52070	TYIU-YAR15	43403-10011	TYIU-YAR15	43403-10011
NCP51	1NZ-FE	MT/AT	1500	200207		TY-35	43410-52070	TYIU-YAR15	43403-10011	TYIU-YAR15	43403-10011
NCP52	1NZ-FNE	MT/AT	1500	200508		TY-35	43410-52070	TYIU-YAR15	43403-10011	TYIU-YAR15	43403-10011
NCP55	1NZ-FE	MT/AT	1500	200206		TY-35	43410-52030			TYIU-5009	43403-12040
NCP55	1NZ-FE	MT/AT	1500	200206		TY-35	43410-52031			TYIU-5009	43403-12040
PRONARD											
MCX20	1MZ-FE	4AT	3000	200002			43410-07030				
RAUM											
EXZ10	5E-FE	4AT	1500	199705		TY-37A48	43410-16200				
NCZ20	1NZ-FE	4AT	1500	200304		TY-35A48	43460-59045	TYIU-YAR15	43403-10011	TYIU-YAR15	43403-10011
RAV4											
ZCA25W	1ZZ-FE	4AT	1800	200005		TY-54	43410-32301				
ZCA26W	1ZZ-FE	4AT	1800	200005		TY-54	43410-32301				
SXA10 4WD	3S-FE	MT/AT	2000	199404	200005	TY-09	43410-42020	TYIP-RAV4	43403-12050	TYID-RAV4	43403-12060
SXA10 4WD	3S-FE	MT/AT	2000	199404	200005	TY-25A48	43410-42010	TYIP-RAV4	43403-12050	TYID-RAV4	43403-12060
SXA10 4WD	3S-FE	MT/AT	2000	199405	200005	TY-09	43410-42021	TYIP-RAV4	43403-12050	TYID-RAV4	43403-12060
SXA10 4WD	3S-FE	MT/AT	2000	199405	200005	TY-25A48	43410-42011	TYIP-RAV4	43403-12050	TYID-RAV4	43403-12060
SXA10 4WD	3S-FE	MT/AT	2000	199405	200005	TY-25A48	43410-42011	TYIU-RAV4R	42350-42010	TYIU-RAV4R	42350-42010
SXA11 4WD	3S-FE	MT/AT	2000	199504	200005	TY-09	43410-42020	TYIU-RAV4R	42350-42010	TYIU-RAV4R	42350-42010
SXA11 4WD	3S-FE	MT/AT	2000	199504	200005	TY-09	43410-42020	TYIP-RAV4	43403-12050	TYID-RAV4	43403-12060
SXA11 4WD	3S-FE	MT/AT	2000	199504	200005	TY-09	43410-42021	TYIP-RAV4	43403-12050	TYID-RAV4	43403-12060
SXA11 4WD	3S-FE	MT/AT	2000	199504	200005	TY-25A48	43410-42010	TYIP-RAV4	43403-12050	TYID-RAV4	43403-12060
SXA11 4WD	3S-FE	MT/AT	2000	199504	200005	TY-25A48	43410-42011	TYIP-RAV4	43403-12050	TYID-RAV4	43403-12060
SXA15	3S-FE	MT/AT	2000	199709	200005	TY-25A48	43410-20581	TYID-5010	43030-32060	TYIP-5001	43040-32040
SXA16	3S-FE	MT/AT	2000	199709	200005	TY-25A48	43410-20582	TYID-5010	43030-32060	TYIP-5001	43040-32040
SXA16	3S-FE	MT/AT	2000	199709	200005	TY-25A48	43410-20583	TYID-5010	43030-32060	TYIP-5001	43040-32040
ACA20W	1AZ-FSE	4AT/F	2000	200005		TY-900A48	43410-42060	TYIP-R4	43030-42020	TYID-R4	43040-42020
ACA20W	1AZ-FSE	5MT/F	2000	200005		TY-900A48	43410-42060	TYIP-R4	43030-42020	TYID-R4	43040-42020
ACA21W 4WD	1AZ-FSE	4AT/F	2000	200005		TY-900A48	43410-42060	TYIP-R4	43030-42020	TYID-R4	43040-42020
ACA21W 4WD	1AZ-FSE	5MT/F	2000	200005		TY-900A48	43410-42060	TYIP-R4	43030-42020	TYID-R4	43040-42020
ACA21W 4WD	1AZ-FSE	5MT/F	2000	200005		TY-900A48	43410-42060	TYIU-RAV4R	42350-42010	TYIU-RAV4R	42350-42010
ZCA25W	1ZZ-FE	4AT/F	1800	200005		TY-55A48	43410-32302				
ZCA26W	1ZZ-FE	4AT/F	1800	200005		TY-55A48	43410-32302				
ACA26	1AZ-FE	MT	2000	200005						TYIL-911	43040-28010
SCEPTER											
SXV10	5S-FE	AT	2200	199211	199608	TY-24A48	43410-33020	TYIR-5226	43030-33010	TYIU-5006	43040-20020
SXV10	5S-FE	AT	2200	199211	199608	TY-12	43410-33010	TYIR-5226	43030-33010	TYIU-5006	43040-20020
SXV10	5S-FE	AT	2200	199211	199608	TY-27	43410-06050				
SXV10	5S-FE	AT	2200	199211	199608	TY-27A48	43410-06060				
SXV15W	5S-FE	AT	2200	199212	199409	TY-12	43410-33010				
SXV15W	5S-FE	AT	2200	199212	199409	TY-24A48	43410-33020				
SXV15W	5S-FE	AT	2200	199212	199609	TY-27	43410-06050				
SXV15W	5S-FE	AT	2200	199212	199609	TY-27A48	43410-06060				
SXV15	5S-FE	AT	2200	199310	199409	TY-24A48	43410-33020				
SXV15	5S-FE	AT	2200	199310	199409	TY-27	43410-06050				
SXV15	5S-FE	AT	2200	199310	199409	TY-27A48	43410-06060				

TOYOTA

MODEL	ENGINE	AT/MT	CC	YEAR	YEAR	OUTER	O.E No.R	INNER R	O.E No.IR	INNER L	O.E No.IL
VCV15	3VZ-FE	AT	3000	199207	199409	TY-13	43410-33030	TYIU-5003	43409-06010	TYIU-5003	43409-06010
VCV15	3VZ-FE	AT	3000	199207	199409	TY-13A48	43410-33040	TYIU-5003	43409-06010	TYIU-5003	43409-06010
VCV15	3VZ-FE	AT	3000	199207	199606	TY-28	43410-06090	TYIU-5003	43409-06010	TYIU-5003	43409-06010
VCV15	3VZ-FE	AT	3000	199207	199606	TY-28A48	43410-06100	TYIU-5003	43409-06010	TYIU-5003	43409-06010
VCV10	3VZ-FE	AT	3000	199211	199608	TY-13	43410-33030	TYIU-5003	43409-06010	TYIU-5003	43409-06010
VCV10	3VZ-FE	AT	3000	199211	199608	TY-13A48	43410-33040	TYIU-5003	43409-06010	TYIU-5003	43409-06010
VCV10	3VZ-FE	AT	3000	199211	199608	TY-28	43410-06090	TYIU-5003	43409-06010	TYIU-5003	43409-06010
VCV10	3VZ-FE	AT	3000	199211	199608	TY-28A48	43410-06100	TYIU-5003	43409-06010	TYIU-5003	43409-06010
SERA											
EXY10	5E-FHE	MT/AT	1500	199003	199101	TY-03	43410-10150				
EXY10	5E-FHE	MT/AT	1500	199003	199101	TY-26A48	43410-10160				
EXY10	5E-FHE	MT/AT	1500	199101	199512	TY-03	43410-10220				
EXY10	5E-FHE	MT/AT	1500	199101	199512	TY-71A48	43410-10230				
SIENTA											
NCP81	1NZ-FE	AT/CVT	1500	200309		TY-35A48	43460-59045	TYIU-YAR15	43403-10011	TYIU-YAR15	43403-10011
SOLUNA											
AL50	5A-FE	MT/AT	1300	200101		TY-52	43410-0A012				
SPARKY											
S231E	K3-VE	MT/AT	1300	200010			43410-97506				
SPRINTER CARIB											
AE95G 4WD	4A-FE	MT/AT	1600	198802	199009	TY-09	43410-12230				
AE95G 4WD	4A-FHE	MT/AT	1600	199009	199101	TY-09	43410-12230				
AE95G 4WD	4A-FHE	MT/AT	1600	199009	199101	TY-25A48	43410-12220				
AE95G 4WD	4A-FHE	MT/AT	1600	199101	199508	TY-09	43410-12180				
AE95G 4WD	4A-FHE	MT/AT	1600	199101	199508	TY-25A48	43410-12221				
AE114 4WD	4A-FE	MT/AT	1600	199508		TY-09	43410-12400				
AE114 4WD	4A-FE	MT/AT	1600	199508		TY-25A48	43410-12410				
AE115 4WD	7A-FE	MT/AT	1800	199508	200207	TY-09	43410-12400				
AE115 4WD	7A-FE	MT/AT	1800	199508	200207	TY-25A48	43410-12410				
STARLET											
EP71	2E-LU ELU	MT/AT	1300	198410	198912	TY-03	43410-10020				
EP71	2E-TELU	MT/AT	1300	198410	198910	TY-03	43410-10060				
EP76V	2E-LJ	MT	1300	198410	198912	TY-03	43410-10020				
EP71	2E-LU ELU	MT/AT	1300	198410	198912	TY-41	43460-19496				
EP71	2E-LU ELU	MT/AT	1300	198410	198912	TY-41	43460-19496				
EP76V	2E-LJ	4MT	1300	198410	198912	TY-41	43460-19496				
EP71	2E-TELU	MT/AT	1300	198601	198901	TY-03	43410-10030				
EP71	2E-TELU	MT/AT	1300	198601	198912	TY-41	43460-19146				
EP82	4E-FE	MT/AT	1300	198912	199512	TY-03	43410-10091				
EP82	4E-FE	MT/AT	1300	198912	199512	TY-03	43410-10101				
EP82	4E-FTE	MT/AT	1300	198912	199101	TY-03	43410-10150				
EP82	4E-FTE	MT/AT	1300	198912	199101	TY-26A48	43410-10160				
EP85 4WD	4E-FE	MT/AT	1300	199008	199101	TY-03	43410-10170				
EP85 4WD	4E-FE	MT/AT	1300	199008	199101	TY-26A48	43410-10180				
EP82	4E-FTE	MT/AT	1300	199101	199201	TY-03	43410-10220				
EP82	4E-FTE	MT/AT	1300	199101	199201		43410-10230				
EP85 4WD	4E-FE	MT/AT	1300	199101	199512	TY-03	43410-10171				
EP85 4WD	4E-FE	MT/AT	1300	199101	199512		43410-10181				
EP82	4E-FTE	MT/AT	1300	199201	199512	TY-10	43410-10200				
EP82	4E-FTE	MT/AT	1300	199201	199512		43410-10210				
EP91	4E-FE	MT/AT	1300	199601	199907	TY-03	43410-10091				
EP91	4E-FE	MT/AT	1300	199601	199907	TY-03	43410-10101				
EP91	4E-FTE	MT/AT	1300	199601	199907	TY-10	43410-10200				
EP91	4E-FTE	MT/AT	1300	199601	199907		43410-10210				
EP95 4WD	4E-FE	MT/AT	1300	199601	199907		43410-10181				
NP70	1N	AT	1500	198612	198912	TY-03	43410-10020				
NP70	1N	MT	1500	198612	198912	TY-03	43410-10050				
NP76V	1N	MT	1500	198612	198912	TY-03	43410-10050				
NP70	1N	5MT	1500	198612	198912	TY-41	43460-19255				
NP76V	1N	5MT	1500	198612	198912	TY-41	43460-19255				
NP70	1N	4AT	1500	198612	198912	TY-41	43460-19496				
NP80	1N	AT	1500	198912	199512	TY-03	43410-10101				
NP80	1N	MT	1500	198912	199512	TY-03	43410-10130				
NP80	1N	MT	1500	198912	199512		43410-10190				
NP80	1N	AT	1500	198912	199512	TY-03	43410-10090				
NP90	1N	AT	1500	199601	199907	TY-03	43410-10091				
NP90	1N	AT	1500	199601	199907	TY-03	43410-10101				
NP90	1N	MT	1500	199601	199907	TY-03	43410-10131				
NP90	1N	MT	1500	199601	199907		43410-10190				
EP81	4E-FE	MT/AT	1300	198901	199512	TY-71	-				
EP82	4E-FTE	MT	1300	199201	199601	TY-71	43410-10250				
EP82	4E-FTE	MT/AT	1300	199201	199601	TY-71	43410-10250				
EP82	4E-FTE	MT/AT	1300	199201	199601	TY-71A48	43410-10210				
EP82	4E-FTE	MT/AT	1300	199201	199601	TY-71A48	43410-10210				
EP91	4E-FTE	MT/AT	1300	199601	199707	TY-71A48	43410-10210				
EP91	4E-FTE	MT	1300	199601	199907	TY-71A48	43410-10210				
EP91	4E-FTE	MT	1300	199601	199907	TY-71	43410-10250				
EP91	4E-FTE	MT	1300	199601	199907	TY-71	43410-10250				
VISTA											
ZZV50	1ZZ-FE	4AT	1800	199806		TY-55	43410-32300				
SV50	3S-FSE	4AT	2000	199806		TY-55	43410-32300				
SV55 4WD	3S-FE	4AT	2000	199806			43410-32290				
VITZ/YARIS/ECHO/ECHO VERSO											
SCP10	1SZ-FE	MT/AT	1000	199901		TY-40	43410-52040				

TOYOTA

MODEL	ENGINE	AT/MT	CC	YEAR	YEAR	OUTER	O.E No.R	INNER R	O.E No.IR	INNER L	O.E No.IL
SCP10	1SE-FE	MT/AT	1000	199901		TY-40	43460-59015				
SCP10	1SZ-FE	MT/AT	1000	199901		TY-40	43460-59025				
SCP10	1SE-FE	MT/AT	1000	199901		TY-40	43410-52050				
SCP10	1SZ-FE	MT/AT	1000	199901		TY-40	43410-52040				
SCP10	1SZ-FE	MT/AT	1000	200001		TY-73A48	43410-52110	TYIU-YAR10	43030-52020	TYIU-YAR10	43030-52020
NCP11	2NZ-FE	MT/AT	1300	200206		TY-68	43460-59115				
NCP11	2NZ-FE	MT/AT	1300	200206		TY-68	43410-52120				
NCP11	2NZ-FE	MT/AT	1300	200206		TY-68	43410-52130				
NCP10	2NZ-FE	MT/AT	1300	199909		TY-35	43410-52070	TYIU-YAR13	43403-16020	TYIU-YAR13	43403-16020
NCP10	2NZ-FE	MT/AT	1300	199909		TY-35	43410-52070	TYIU-YAR15	43403-10011	TYIU-YAR15	43403-10011
NCP15 4WD	2NZ-FE	MT/AT	1300	199909		TY-35	43410-52030			TYIU-5009	43403-12040
NCP10	2NZ-FE	MT/AT	1300	199910		TY-35A48	43460-59045	TYIU-YAR13	43403-16020	TYIU-YAR13	43403-16020
NCP10	2NZ-FE	MT/AT	1300	199910		TY-68	43410-52020	TYIU-YAR13	43403-16020	TYIU-YAR13	43403-16020
SCP13	2NZ-FE	MT/AT	1300	200212			43410-52160	TYIU-YAR13	43403-16020	TYIU-YAR13	43403-16020
SCP90	2NZ-FE	MT/AT	1300	200502			43410-52190	TYIU-YAR13	43403-16020	TYIU-YAR13	43403-16020
NCP95 4WD	2NZ-FE	AT	1300	200501			43410-52220			TYIU-5009	43403-12040
NCP13	1NZ-FE	MT/AT	1500	200010		TY-35	43410-52070	TYIU-YAR15	43403-10011	TYIU-YAR15	43403-10011
NCP91	1NZ-FE	MT/AT	1500	200501			43410-52210	TYIU-YAR15	43403-10011	TYIU-YAR15	43403-10011
VIOS (Thailand)											
NCP42R	1NZ-FE	MT/AT	1500	200010		TY-78A48	43410-0D120				
WILL											
NCP19	2NZ-FE	AT	1300	200001	200112	TY-68	43410-52020	TYIU-YAR13	43403-16020	TYIU-YAR13	43403-16020
NCP19	2NZ-FE	AT	1300	200001	200112	TY-35	43410-52070	TYIU-YAR13	43403-16020	TYIU-YAR13	43403-16020
NCP70	2NZ-FE	AT	1300	200209		TY-35	43410-52070	TYIU-YAR15	43403-10011	TYIU-YAR15	43403-10011
NCP70	2NZ-FE	AT	1300	200209		TY-68	43410-52130	TYIU-YAR13	43403-16020	TYIU-YAR13	43403-16020
WISH											
ANE10G	1AZ-FSE	CVT/I	2000	200304		TY-909A48	43410-42100				
ANE11W	1AZ-FSE	CVT/I	2000	200304		TY-909A48	43410-21070				
ZNE10G	1ZZ-FE	4AT/I	1800	200301		TY-55A48	43410-12670				
ZNE14G 4WD	1ZZ-FE	4AT/I	1800	200301		TY-55A48	43410-12531				
WINDOM/LEXUS ES300											
VCV11	4VZ-FE	AT	2500	199308	199608	TY-13	43410-33030	TYIU-5003	43409-06010	TYIU-5003	43409-06010
VCV11	4VZ-FE	AT	2500	199308	199608	TY-13A48	43410-33040	TYIU-5003	43409-06010	TYIU-5003	43409-06010
MCV21	2MZ-FE	4AT	2500	199608	200107		43410-06170				
MCV21	2MZ-FE	4AT	2500	199608	200107	TY-13A48	43410-33070				
VCV10	3VZ-FE	AT	3000	199110	199608	TY-28	43410-06090	TYIU-5003	43409-06010	TYIU-5003	43409-06010
VCV10	3VZ-FE	AT	3000	199110	199608	TY-13	43410-33030	TYIU-5003	43409-06010	TYIU-5003	43409-06010
VCV10	3VZ-FE	AT	3000	199110	199608	TY-13A48	43410-33040	TYIU-5003	43409-06010	TYIU-5003	43409-06010
MCV20	1MZ-FE	4AT	3000	199608	200107		43410-06170				
MCV20	1MZ-FE	4AT	3000	199608	200107	TY-13A48	43410-33070				

VOLKSWAGEN

MODEL	ENGINE	AT/MT	CC	YEAR	YEAR	OUTER	O.E No.R	INNER R	O.E No.IR	INNER L	O.E No.IL
BORA											
BORA (1J2)	1.4 16V AHW	AT/MT	1400	199810		AD-1241	1J0 498 099 A				
BORA (1J2)	1.4 16V AHW	AT/MT	1400	199810		VW-029	1J0 498 099 E	VWIU-G41	1J0 498 103 K	VWIU-G41	1J0 498 103 K
BORA (1J2)	1.4 16V AKQ	AT/MT	1400	199810		AD-1241	1J0 498 099 A				
BORA (1J2)	1.4 16V AKQ	AT/MT	1400	199810		VW-029	1J0 498 099 E	VWIU-G41	1J0 498 103 K	VWIU-G41	1J0 498 103 K
BORA (1J2)	1.4 16V APE	AT/MT	1400	199810		AD-1241	1J0 498 099 A				
BORA (1J2)	1.4 16V APE	AT/MT	1400	199810		VW-029	1J0 498 099 E	VWIU-G41	1J0 498 103 K	VWIU-G41	1J0 498 103 K
BORA (1J2)	1.4 16V AXP	AT/MT	1400	199810		AD-1241	1J0 498 099 A				
BORA (1J2)	1.4 16V AXP	AT/MT	1400	199810		VW-029	1J0 498 099 E	VWIU-G41	1J0 498 103 K	VWIU-G41	1J0 498 103 K
BORA (1J2)	1.4 16V BCA	AT/MT	1400	199810		AD-1241	1J0 498 099 A				
BORA (1J2)	1.4 16V BCA	AT/MT	1400	199810		VW-029	1J0 498 099 E	VWIU-G41	1J0 498 103 K	VWIU-G41	1J0 498 103 K
BORA (1J2)	1.6 AEH	AT/MT	1600	199810		AD-1241	1J0 498 099 A				
BORA (1J2)	1.6 AEH	AT/MT	1600	199810		VW-029	1J0 498 099 E	VWIU-G41	1J0 498 103 K	VWIU-G41	1J0 498 103 K
BORA (1J2)	1.6 AKL	AT/MT	1600	199810		AD-1241	1J0 498 099 A				
BORA (1J2)	1.6 AKL	AT/MT	1600	199810		VW-029	1J0 498 099 E	VWIU-G41	1J0 498 103 K	VWIU-G41	1J0 498 103 K
BORA (1J2)	1.6 APF	AT/MT	1600	199810		AD-1241	1J0 498 099 A				
BORA (1J2)	1.6 APF	AT/MT	1600	199810		VW-029	1J0 498 099 E	VWIU-G41	1J0 498 103 K	VWIU-G41	1J0 498 103 K
BORA (1J2)	1.8 AGN	AT/MT	1800	199810		VW-029	1J0 498 099 E	VWIU-G41	1J0 498 103 K	VWIU-G41	1J0 498 103 K
BORA (1J2)	1.9 SDI AGP	AT/MT	1900	199810		AD-1241	1J0 498 099 A				
BORA (1J2)	1.9 SDI AGP	AT/MT	1900	199810		VW-029	1J0 498 099 E	VWIU-G41	1J0 498 103 K	VWIU-G41	1J0 498 103 K
BORA (1J2)	1.9 SDI AQM	AT/MT	1900	199810		AD-1241	1J0 498 099 A				
BORA (1J2)	1.9 SDI AQM	AT/MT	1900	199810		VW-029	1J0 498 099 E	VWIU-G41	1J0 498 103 K	VWIU-G41	1J0 498 103 K
BORA (1J2)	1.9 TDI AGR	AT/MT	1900	199810		VW-029	1J0 498 099 E	VWIU-G41	1J0 498 103 K	VWIU-G41	1J0 498 103 K
BORA (1J2)	1.9 TDI AHF	AT/MT	1900	199810		VW-029	1J0 498 099 E	VWIU-G41	1J0 498 103 K	VWIU-G41	1J0 498 103 K
BORA (1J2)	1.9 TDI ALH	AT/MT	1900	199810		VW-029	1J0 498 099 E	VWIU-G41	1J0 498 103 K	VWIU-G41	1J0 498 103 K
BORA (1J2)	1.9 TDI ASV	AT/MT	1900	199810		VW-029	1J0 498 099 E	VWIU-G41	1J0 498 103 K	VWIU-G41	1J0 498 103 K
BORA (1J2)	2.0 APK	AT/MT	2000	199810		VW-029	1J0 498 099 E	VWIU-G41	1J0 498 103 K	VWIU-G41	1J0 498 103 K
BORA (1J2)	2.0 AQY	AT/MT	2000	199810		VW-029	1J0 498 099 E	VWIU-G41	1J0 498 103 K	VWIU-G41	1J0 498 103 K
BORA (1J2)	2.0 AZG	AT/MT	2000	199810		VW-029	1J0 498 099 E	VWIU-G41	1J0 498 103 K	VWIU-G41	1J0 498 103 K
BORA (1J2)	2.0 AZH	AT/MT	2000	199810		VW-029	1J0 498 099 E	VWIU-G41	1J0 498 103 K	VWIU-G41	1J0 498 103 K
BORA (1J2)	2.0 AZJ	AT/MT	2000	199810		VW-029	1J0 498 099 E	VWIU-G41	1J0 498 103 K	VWIU-G41	1J0 498 103 K
BORA (1J2)	2.3 V5 AGZ	AT/MT	2300	199810		VW-029	1J0 498 099 E	VWIU-G41	1J0 498 103 K	VWIU-G41	1J0 498 103 K
BORA VARIANT (1J6)	1.6 AEH	AT/MT	1600	199905		AD-1241	1J0 498 099 A				
BORA VARIANT (1J6)	1.6 AEH	AT/MT	1600	199905		VW-029	1J0 498 099 E	VWIU-G41	1J0 498 103 K	VWIU-G41	1J0 498 103 K
BORA VARIANT (1J6)	1.6 AKL	AT/MT	1600	199905		AD-1241	1J0 498 099 A				
BORA VARIANT (1J6)	1.6 AKL	AT/MT	1600	199905		VW-029	1J0 498 099 E	VWIU-G41	1J0 498 103 K	VWIU-G41	1J0 498 103 K
BORA VARIANT (1J6)	1.6 APF	AT/MT	1600	199905		AD-1241	1J0 498 099 A				
BORA VARIANT (1J6)	1.6 APF	AT/MT	1600	199905		VW-029	1J0 498 099 E	VWIU-G41	1J0 498 103 K	VWIU-G41	1J0 498 103 K
BORA VARIANT (1J6)	1.9 TDI AHF	AT/MT	1900	199905		VW-029	1J0 498 099 E	VWIU-G41	1J0 498 103 K	VWIU-G41	1J0 498 103 K
BORA VARIANT (1J6)	1.9 TDI ANU	AT/MT	1900	199905		VW-029	1J0 498 099 E	VWIU-G41	1J0 498 103 K	VWIU-G41	1J0 498 103 K
BORA VARIANT (1J6)	1.9 TDI ASV	AT/MT	1900	199905		VW-029	1J0 498 099 E	VWIU-G41	1J0 498 103 K	VWIU-G41	1J0 498 103 K
BORA VARIANT (1J6)	2.3 V5 AGZ	AT/MT	2300	199905		VW-029	1J0 498 099 E	VWIU-G41	1J0 498 103 K	VWIU-G41	1J0 498 103 K
CADDY											
CADDY I (14)	1.5 JB	AT/MT	1500	198208	199207	VW-002	171 498 099 BX				
CADDY I (14)	1.6 D JK	AT/MT	1600	198208	199207	VW-002	171 498 099 BX				
CADDY I (14)	1.6 D ME	AT/MT	1600	198208	199207	VW-002	171 498 099 BX				
CADDY I (14)	1.6 EM	AT/MT	1600	198208	199207	VW-002	171 498 099 BX				
CADDY I (14)	1.6 EW	AT/MT	1600	198208	199207	VW-002	171 498 099 BX				
CADDY I (14)	1.8 JH	AT/MT	1800	198208	199207	VW-002	171 498 099 BX				
2KA	BCA	5MT	1400	200402	200605	VW-B61	1K0 498 099	VWIU-5021	1K0 498 103	VWIU-5021	1K0 498 103
2KA	BUD	5MT	1400	200605	200805	VW-B61	1K0 498 099	VWIU-5021	1K0 498 103	VWIU-5021	1K0 498 103
2KA >>2K-8-035 369	BGU	5MT	1600	200404	200505	VW-B61	1K0 498 099	VWIU-5021	1K0 498 103	VWIU-5021	1K0 498 103
2KA >>2K-8-035 369	BSE	5MT	1600	200506	200805	VW-B61	1K0 498 099	VWIU-5021	1K0 498 103	VWIU-5021	1K0 498 103
2KA>>2K-8-035 369	BSF	5MT	1600	200506	200805	VW-B61	1K0 498 099	VWIU-5021	1K0 498 103	VWIU-5021	1K0 498 103
2KA 2K-8-035 370>>2682mm	BSE	5MT	1600	200506	200805	VW-B61	1K0 498 099	VWIU-5021	1K0 498 103	VWIU-5021	1K0 498 103
2KA 2K-8-035 370>>682mm	BSF	5MT	1600	200506	200805	VW-B61	1K0 498 099	VWIU-5021	1K0 498 103	VWIU-5021	1K0 498 103
2KA 2K-8-035 370>>3002mm	BSE	5MT	1600	200506	200805	VW-B62	1K0 498 099 B	VWIU-5021	1K0 498 103	VWIU-5021	1K0 498 103
2KA 2K-8-035 370>>3002mm	BSF	5MT	1600	200506	200805	VW-B62	1K0 498 099 B	VWIU-5021	1K0 498 103	VWIU-5021	1K0 498 103
2KA	BJB	5MT	1900	200402	200805	VW-B62	1K0 498 099 B	VWIU-B6M1	1K0 498 103 A	VWIU-B6M1	1K0 498 103 A
2KA	BLS	5MT	1900	200506	200805	VW-B62	1K0 498 099 B	VWIU-B6M1	1K0 498 103 A	VWIU-B6M1	1K0 498 103 A
2KA	BSU	5MT	1900	200509	200805	VW-B62	1K0 498 099 B	VWIU-B6M1	1K0 498 103 A	VWIU-B6M1	1K0 498 103 A
2KA	BLS	6AT	1900	200506	200805	VW-B62	1K0 498 099 B	VWIU-B6A1	1K0 498 103 E	VWIU-B6A1	1K0 498 103 E
2KA	BSX	5MT	2000	200604	200805	VW-B61	1K0 498 099	VWIU-5021	1K0 498 103	VWIU-5021	1K0 498 103
2KA>>2K-8-035 369	BDJ	5MT	2000	200402	200805	VW-B61	1K0 498 099	VWIU-5021	1K0 498 103	VWIU-5021	1K0 498 103
2KA >>2K-8-035 369	BST	5MT	2000	200506	200805	VW-B61	1K0 498 099	VWIU-5021	1K0 498 103	VWIU-5021	1K0 498 103
2KA	BDJ	5MT	2000	200402	200805	VW-B61	1K0 498 099	VWIU-5021	1K0 498 103	VWIU-5021	1K0 498 103
2KA	BST	5MT	2000	200506	200805	VW-B61	1K0 498 099	VWIU-5021	1K0 498 103	VWIU-5021	1K0 498 103
2KA	BMM	6MT	2000	200709	200805		5N0 498 099	VWIU-B6M1	1K0 498 103 A	VWIU-B6M1	1K0 498 103 A
2KB	BCA	5MT	1400	200402	200605	VW-B61	1K0 498 099	VWIU-5021	1K0 498 103	VWIU-5021	1K0 498 103
2KB	BUD	5MT	1400	200605	200805	VW-B61	1K0 498 099	VWIU-5021	1K0 498 103	VWIU-5021	1K0 498 103
2KB>>2K-8- 035 369	BGU	5MT	1600	200404	200505	VW-B61	1K0 498 099	VWIU-5021	1K0 498 103	VWIU-5021	1K0 498 103
2KB >>2K-8-035 369	BSE	5MT	1600	200506	200805	VW-B61	1K0 498 099	VWIU-5021	1K0 498 103	VWIU-5021	1K0 498 103
2KB>>2K-8-035 369	BSF	5MT	1600	200506	200805	VW-B61	1K0 498 099	VWIU-5021	1K0 498 103	VWIU-5021	1K0 498 103
2KB 2K-8-035 370>>2682mm	BSE	5MT	1600	200506	200805	VW-B61	1K0 498 099	VWIU-5021	1K0 498 103	VWIU-5021	1K0 498 103
2KB 2K-8-035 370>>2682mm	BSF	5MT	1600	200506	200805	VW-B61	1K0 498 099	VWIU-5021	1K0 498 103	VWIU-5021	1K0 498 103
2KB 2K-8-035 370>>3002mm	BSE	5MT	1600	200506	200805	VW-B62	1K0 498 099 B	VWIU-5021	1K0 498 103	VWIU-5021	1K0 498 103
2KB 2K-8-035 370>>3002mm	BSF	5MT	1600	200506	200805	VW-B62	1K0 498 099 B	VWIU-5021	1K0 498 103	VWIU-5021	1K0 498 103
2KB	BJB	5MT	1900	200402	200805	VW-B62	1K0 498 099 B	VWIU-B6M1	1K0 498 103 A	VWIU-B6M1	1K0 498 103 A
2KB	BLS	5MT	1900	200506	200805	VW-B62	1K0 498 099 B	VWIU-B6M1	1K0 498 103 A	VWIU-B6M1	1K0 498 103 A
2KB	BSU	5MT	1900	200509	200805	VW-B62	1K0 498 099 B	VWIU-B6M1	1K0 498 103 A	VWIU-B6M1	1K0 498 103 A
2KB	BLS	6AT	1900	200506	200805	VW-B62	1K0 498 099 B	VWIU-B6A1	1K0 498 103 E	VWIU-B6A1	1K0 498 103 E
2KB	BSX	5MT	2000	200604	200805	VW-B61	1K0 498 099	VWIU-5021	1K0 498 103	VWIU-5021	1K0 498 103
2KB>>2K-8-035 369	BDJ	5MT	2000	200402	200805	VW-B61	1K0 498 099	VWIU-5021	1K0 498 103	VWIU-5021	1K0 498 103
2KB>>2K-8-035 369	BST	5MT	2000	200506	200805	VW-B61	1K0 498 099	VWIU-5021	1K0 498 103	VWIU-5021	1K0 498 103
2KB	BDJ	5MT	2000	200402	200805	VW-B61	1K0 498 099	VWIU-5021	1K0 498 103	VWIU-5021	1K0 498 103
2KB	BST	5MT	2000	200506	200805	VW-B61	1K0 498 099	VWIU-5021	1K0 498 103	VWIU-5021	1K0 498 103
2KB	BMM	6MT	2000	200709	200805		5N0 498 099	VWIU-B6M1	1K0 498 103 A	VWIU-B6M1	1K0 498 103 A
2KJ>>2K-8-035 369	BSE	5MT	1600	200506	200805	VW-B61	1K0 498 099	VWIU-5021	1K0 498 103	VWIU-5021	1K0 498 103
2KJ>>2K-8-035 369	BSF	5MT	1600	200506	200805	VW-B61	1K0 498 099	VWIU-5021	1K0 498 103	VWIU-5021	1K0 498 103

VOLKSWAGEN

MODEL	ENGINE	AT/MT	CC	YEAR	YEAR	OUTER	O.E No.R	INNER R	O.E No.IR	INNER L	O.E No.IL
2KJ2K-8-035 370>> 2682mm	BSE	5MT	1600	200506	200805	VW-B61	1K0 498 099	VWIU-5021	1K0 498 103	VWIU-5021	1K0 498 103
2KJ2K-8-035 370>>2682mm	BSF	5MT	1600	200506	200805	VW-B61	1K0 498 099	VWIU-5021	1K0 498 103	VWIU-5021	1K0 498 103
2KJ2K-8-035 370>>3002mm	BSE	5MT	1600	200506	200805	VW-B62	1K0 498 099 B	VWIU-5021	1K0 498 103	VWIU-5021	1K0 498 103
2KJ 2K-8-035 370>>3002mm	BSF	5MT	1600	200506	200805	VW-B62	1K0 498 099 B	VWIU-5021	1K0 498 103	VWIU-5021	1K0 498 103
2KJ	BJB	5MT	1900	200402	200805	VW-B62	1K0 498 099 B	VWIU-B6M1	1K0 498 103 A	VWIU-B6M1	1K0 498 103 A
2KJ	BLS	5MT	1900	200506	200805	VW-B62	1K0 498 099 B	VWIU-B6M1	1K0 498 103 A	VWIU-B6M1	1K0 498 103 A
2KJ	BLS	6AT	1900	200506	200805	VW-B62	1K0 498 099 B	VWIU-B6A1	1K0 498 103 E	VWIU-B6A1	1K0 498 103 E
2KJ	BSX	5MT	2000	200604	200805	VW-B61	1K0 498 099	VWIU-5021	1K0 498 103	VWIU-5021	1K0 498 103
2KJ	BMM	6MT	2000	200709	200805		5N0 498 099	VWIU-B6M1	1K0 498 103 A	VWIU-B6M1	1K0 498 103 A
2KH>>2K-8-035 369	BSE	5MT	1600	200506	200805	VW-B61	1K0 498 099	VWIU-5021	1K0 498 103	VWIU-5021	1K0 498 103
2KH>>2K-8-035 369	BSF	5MT	1600	200506	200805	VW-B61	1K0 498 099	VWIU-5021	1K0 498 103	VWIU-5021	1K0 498 103
2KH2K-8-035 370>>2682mm	BSE	5MT	1600	200506	200805	VW-B61	1K0 498 099	VWIU-5021	1K0 498 103	VWIU-5021	1K0 498 103
2KH2K-8-035 370>>2682mm	BSF	5MT	1600	200506	200805	VW-B61	1K0 498 099	VWIU-5021	1K0 498 103	VWIU-5021	1K0 498 103
2KH2K-8-035 370>>3002mm	BSE	5MT	1600	200506	200805	VW-B62	1K0 498 099 B	VWIU-5021	1K0 498 103	VWIU-5021	1K0 498 103
2KH2K-8-035 370>>3002mm	BSF	5MT	1600	200506	200805	VW-B62	1K0 498 099 B	VWIU-5021	1K0 498 103	VWIU-5021	1K0 498 103
2KH	BJB	5MT	1900	200402	200805	VW-B62	1K0 498 099 B	VWIU-B6M1	1K0 498 103 A	VWIU-B6M1	1K0 498 103 A
2KH	BLS	5MT	1900	200506	200805	VW-B62	1K0 498 099 B	VWIU-B6M1	1K0 498 103 A	VWIU-B6M1	1K0 498 103 A
2KH	BLS	6AT	1900	200506	200805	VW-B62	1K0 498 099 B	VWIU-B6A1	1K0 498 103 E	VWIU-B6A1	1K0 498 103 E
2KH	BSX	5MT	2000	200604	200805	VW-B61	1K0 498 099	VWIU-5021	1K0 498 103	VWIU-5021	1K0 498 103
2KH	BMM	6MT	2000	200709	200805		5N0 498 099	VWIU-B6M1	1K0 498 103 A	VWIU-B6M1	1K0 498 103 A
CORRADO											
CORRADO (53I)	1.8 16V KR	AT/MT	1800	198708	199512	VW-011	1H0 498 099	VWIU-5021	191 498 103	VWIU-5021	191 498 103
CORRADO (53I)	1.8 G60 PG	AT/MT	1800	198708	199512	VW-011	1H0 498 099	VWIU-5021	191 498 103	VWIU-5021	191 498 103
CORRADO (53I)	2.0 i 16V 9A	AT/MT	2000	198708	199512	VW-011	1H0 498 099	VWIU-5021	191 498 103	VWIU-5021	191 498 103
CORRADO (53I)	2.0 i 2E	AT/MT	2000	198708	199512	VW-011	1H0 498 099	VWIU-5021	191 498 103	VWIU-5021	191 498 103
CORRADO (53I)	2.0 i ADY	AT/MT	2000	198708	199512	VW-011	1H0 498 099	VWIU-5021	191 498 103	VWIU-5021	191 498 103
EOS											
1F7	CAXA	6MT	1400	200711	200805	VW-B61	1K0 498 099	VWIU-5021	1K0 498 103	VWIU-5021	1K0 498 103
1F7	BLF	6MT	1600	200605	200805	VW-B61	1K0 498 099	VWIU-5021	1K0 498 103	VWIU-5021	1K0 498 103
1F7	BVY	6MT	2000	200605	200805	VW-B61	1K0 498 099	VWIU-5021	1K0 498 103	VWIU-5021	1K0 498 103
1F7	BVZ	6MT	2000	200605	200805	VW-B61	1K0 498 099	VWIU-5021	1K0 498 103	VWIU-5021	1K0 498 103
1F7	BPY	6MT	2000	200605	200805	VW-B62	1K0 498 099 B	VWIU-B6M1	1K0 498 103 A	VWIU-B6M1	1K0 498 103 A
1F7	BWA	6MT	2000	200605	200805	VW-B62	1K0 498 099 B	VWIU-B6M1	1K0 498 103 A	VWIU-B6M1	1K0 498 103 A
1F7	BMM	6MT	2000	200605	200805	VW-B62	1K0 498 099 B	VWIU-B6M1	1K0 498 103 A	VWIU-B6M1	1K0 498 103 A
1F7	BPY	6AT	2000	200605	200805	VW-B62	1K0 498 099 B	VWIU-B6M1	1K0 498 103 A	VWIU-B6M1	1K0 498 103 A
1F7	BWA	6AT	2000	200605	200805	VW-B62	1K0 498 099 B	VWIU-B6M1	1K0 498 103 A	VWIU-B6M1	1K0 498 103 A
1F7	BMM	6AT	2000	200605	200805	VW-B62	1K0 498 099 B	VWIU-B6A1	1K0 498 103 E	VWIU-B6A1	1K0 498 103 E
1F7	BUB	6AT	3200	200605	200805		5N0 498 099	VWIU-B6A1	1K0 498 103 E	VWIU-B6A1	1K0 498 103 E
FOX											
Fox (5Z1)	1.2		1200	200506		SK-1403	6Q0 498 099C				
Fox (5Z1)	1.4		1400	200506		SK-1403	6Q0 498 099C				
Fox (5Z1)	1.4 TDI		1400	200506		SK-1414	6Q0 498 099E				
GOLF											
GOLF I (17)	1.1 FA	AT/MT	1100	197404	198512	VW-001	171 498 099	VWIU-5016	171 498 103 B	VWIU-5016	171 498 103 B
GOLF I (17)	1.1 FJ	AT/MT	1100	197404	198512	VW-002	171 498 099 BX	VWIU-5016	171 498 103 DX	VWIU-5016	171 498 103 DX
GOLF I (17)	1.1 GG	AT/MT	1100	197404	198512	VW-001	171 498 099	VWIU-5016	171 498 103 B	VWIU-5016	171 498 103 B
GOLF I (17)	1.1 GG	AT/MT	1100	197404	198512	VW-002	171 498 099 BX	VWIU-5016	171 498 103 DX	VWIU-5016	171 498 103 DX
GOLF I (17)	1.1 HC	AT/MT	1100	197404	198512	VW-002	171 498 099 BX	VWIU-5016	171 498 103 DX	VWIU-5016	171 498 103 DX
GOLF I (17)	1.3 GF	AT/MT	1300	197404	198512	VW-001	171 498 099	VWIU-5016	171 498 103 B	VWIU-5016	171 498 103 B
GOLF I (17)	1.3 GF	AT/MT	1300	197404	198512	VW-002	171 498 099 BX	VWIU-5016	171 498 103 DX	VWIU-5016	171 498 103 DX
GOLF I (17)	1.5 D CK	AT/MT	1500	197404	198512	VW-001	171 498 099				
GOLF I (17)	1.5 D CK	AT/MT	1500	197404	198512	VW-002	171 498 099 BX				
GOLF I (17)	1.5 FH	AT/MT	1500	197404	198512	VW-001	171 498 099				
GOLF I (17)	1.5 JB	AT/MT	1500	197404	198512	VW-001	171 498 099				
GOLF I (17)	1.5 JB	AT/MT	1500	197404	198512	VW-002	171 498 099 BX				
GOLF I (17)	1.6 D CR	AT/MT	1600	197404	198512	VW-002	171 498 099 BX				
GOLF I (17)	1.6 D JK	AT/MT	1600	197404	198512	VW-002	171 498 099 BX				
GOLF I (17)	1.6 FP	AT/MT	1600	197404	198512	VW-001	171 498 099				
GOLF I (17)	1.6 GTI EG	AT/MT	1600	197404	198512	VW-001	171 498 099				
GOLF I (17)	1.6 GTI EG	AT/MT	1600	197404	198512	VW-002	171 498 099 BX				
GOLF I (17)	1.6 TD CY	AT/MT	1600	197404	198512	VW-002	171 498 099 BX				
GOLF I (17)	1.8 GTI DX	AT/MT	1800	197404	198512	VW-002	171 498 099 BX				
GOLF I CABRIO (155)	1.5 JB	AT/MT	1500	197901	199308	VW-001	171 498 099				
GOLF I CABRIO (155)	1.5 JB	AT/MT	1500	197901	199308	VW-002	171 498 099 BX				
GOLF I CABRIO (155)	1.6 EG	AT/MT	1600	197901	199308	VW-001	171 498 099				
GOLF I CABRIO (155)	1.6 EG	AT/MT	1600	197901	199308	VW-002	171 498 099 BX				
GOLF I CABRIO (155)	1.6 EW	AT/MT	1600	197901	199308	VW-011	1H0 498 099	VWIU-5021	191 498 103	VWIU-5021	191 498 103
GOLF I CABRIO (155)	1.6 RE	AT/MT	1600	197901	199308	VW-011	1H0 498 099	VWIU-5021	191 498 103	VWIU-5021	191 498 103
GOLF I CABRIO (155)	1.8 2H	AT/MT	1800	197901	199308	VW-011	1H0 498 099	VWIU-5021	191 498 103	VWIU-5021	191 498 103
GOLF I CABRIO (155)	1.8 DX	AT/MT	1800	197901	199308	VW-002	171 498 099 BX	VWIU-5021	191 498 103	VWIU-5021	191 498 103
GOLF I CABRIO (155)	1.8 DX	AT/MT	1800	197901	199308	VW-011	1H0 498 099	VWIU-5021	191 498 103	VWIU-5021	191 498 103
GOLF I CABRIO (155)	1.8 EV	AT/MT	1800	197901	199308	VW-002	171 498 099 BX	VWIU-5021	191 498 103	VWIU-5021	191 498 103
GOLF I CABRIO (155)	1.8 EV	AT/MT	1800	197901	199308	VW-011	1H0 498 099	VWIU-5021	191 498 103	VWIU-5021	191 498 103
GOLF I CABRIO (155)	1.8 EX	AT/MT	1800	197901	199308	VW-011	1H0 498 099	VWIU-5021	191 498 103	VWIU-5021	191 498 103
GOLF I CABRIO (155)	1.8 JH	AT/MT	1800	197901	199308	VW-011	1H0 498 099	VWIU-5021	191 498 103	VWIU-5021	191 498 103
GOLF I CABRIO (155)	1.8 PB	AT/MT	1800	197901	199308	VW-002	171 498 099 BX	VWIU-5021	191 498 103	VWIU-5021	191 498 103
GOLF I CABRIO (155)	1.8 PB	AT/MT	1800	197901	199308	VW-011	1H0 498 099	VWIU-5021	191 498 103	VWIU-5021	191 498 103
GOLF II (19E, 1G1)	1.8 GTI 16V KR	AT/MT	1800	198308	199212	VW-011	1H0 498 099	VWIU-5021	191 498 103	VWIU-5021	191 498 103
GOLF II (19E, 1G1)	1.8 GTI 16V PL	AT/MT	1800	198308	199212	VW-011	1H0 498 099	VWIU-5021	191 498 103	VWIU-5021	191 498 103
GOLF II (19E, 1G1)	1.8 GTI DX	AT/MT	1800	198308	199212	VW-011	1H0 498 099	VWIU-5021	191 498 103	VWIU-5021	191 498 103
GOLF II (19E, 1G1)	1.8 GTI EV	AT/MT	1800	198308	199212	VW-011	1H0 498 099	VWIU-5021	191 498 103	VWIU-5021	191 498 103
GOLF II (19E, 1G1)	1.8 GTI G60 PG	AT/MT	1800	198308	199212	VW-011	1H0 498 099	VWIU-5021	191 498 103	VWIU-5021	191 498 103
GOLF II (19E, 1G1)	1.8 GTI Sync 1H	AT/MT	1800	198308	199212	VW-011	1H0 498 099	VWIU-5021	191 498 103	VWIU-5021	191 498 103
GOLF II (19E, 1G1)	1.8 GTI Sync PG	AT/MT	1800	198308	199212	VW-011	1H0 498 099	VWIU-5021	191 498 103	VWIU-5021	191 498 103
GOLF II (19E, 1G1)	1.8 GTI GZ	AT/MT	1800	198308	199212	VW-011	1H0 498 099	VWIU-5021	191 498 103	VWIU-5021	191 498 103
GOLF II (19E, 1G1)	1.8 GTI KAT PF	AT/MT	1800	198308	199212	VW-011	1H0 498 099	VWIU-5021	191 498 103	VWIU-5021	191 498 103
GOLF II (19E, 1G1)	1.8 GTI PB	AT/MT	1800	198308	199212	VW-011	1H0 498 099	VWIU-5021	191 498 103	VWIU-5021	191 498 103
GOLF II (19E, 1G1)	1.8 GTI RD	AT/MT	1800	198308	199212	VW-011	1H0 498 099	VWIU-5021	191 498 103	VWIU-5021	191 498 103
GOLF II (19E, 1G1)	1.8 GU	AT/MT	1800	198308	199212	VW-011	1H0 498 099	VWIU-5021	191 498 103	VWIU-5021	191 498 103
GOLF II (19E, 1G1)	1.8 GX	AT/MT	1800	198308	199212	VW-011	1H0 498 099	VWIU-5021	191 498 103	VWIU-5021	191 498 103

VOLKSWAGEN

MODEL	ENGINE	AT/MT	CC	YEAR	YEAR	OUTER	O.E No.R	INNER R	O.E No.IR	INNER L	O.E No.IL
GOLF II (19E, 1G1)	1.8 HV	AT/MT	1800	198308	199212	VW-011	1H0 498 099	VWIU-5021	191 498 103	VWIU-5021	191 498 103
GOLF II (19E, 1G1)	1.8 i KAT GX	AT/MT	1800	198308	199212	VW-011	1H0 498 099	VWIU-5021	191 498 103	VWIU-5021	191 498 103
GOLF II (19E, 1G1)	1.8 i KAT RP	AT/MT	1800	198308	199212	VW-011	1H0 498 099	VWIU-5021	191 498 103	VWIU-5021	191 498 103
GOLF II (19E, 1G1)	1.8 i Sync RP	AT/MT	1800	198308	199212	VW-011	1H0 498 099	VWIU-5021	191 498 103	VWIU-5021	191 498 103
GOLF II (19E, 1G1)	1.8 i Sync RP	AT/MT	1800	198308	199212	VW-010	321 498 099 E	VWIU-5021	191 498 103	VWIU-5021	191 498 103
GOLF II (19E, 1G1)	1.8 RH	AT/MT	1800	198308	199212	VW-011	1H0 498 099	VWIU-5021	191 498 103	VWIU-5021	191 498 103
GOLF II (19E, 1G1)	1.8 Sync 1P	AT/MT	1800	198308	199212	VW-011	1H0 498 099	VWIU-5021	191 498 103	VWIU-5021	191 498 103
GOLF II (19E, 1G1)	1.8 Sync 1P	AT/MT	1800	198308	199212	VW-010	321 498 099 E	VWIU-5021	191 498 103	VWIU-5021	191 498 103
GOLF II (19E, 1G1)	1.8 Sync GU	AT/MT	1800	198308	199212	VW-011	1H0 498 099	VWIU-5021	191 498 103	VWIU-5021	191 498 103
GOLF II (19E, 1G1)	1.8 Sync GU	AT/MT	1800	198308	199212	VW-010	321 498 099 E	VWIU-5021	191 498 103	VWIU-5021	191 498 103
GOLF II (19E, 1G1)	1.8 Sync GX	AT/MT	1800	198308	199212	VW-011	1H0 498 099	VWIU-5021	191 498 103	VWIU-5021	191 498 103
GOLF II (19E, 1G1)	1.8 Sync GX	AT/MT	1800	198308	199212	VW-010	321 498 099 E	VWIU-5021	191 498 103	VWIU-5021	191 498 103
GOLF III (1H1)	1.6 AEK	AT/MT	1600	199108	199708	VW-011	1H0 498 099				
GOLF III (1H1)	1.6 AFT	AT/MT	1600	199108	199708	VW-011	1H0 498 099				
GOLF III (1H1)	1.6 AKS	AT/MT	1600	199108	199708	VW-011	1H0 498 099				
GOLF III (1H1)	1.8 AAM	AT/MT	1800	199108	199708	VW-011	1H0 498 099	VWIU-5021	191 498 103	VWIU-5021	191 498 103
GOLF III (1H1)	1.8 ABS	AT/MT	1800	199108	199708	VW-011	1H0 498 099	VWIU-5021	191 498 103	VWIU-5021	191 498 103
GOLF III (1H1)	1.8 ADZ	AT/MT	1800	199108	199708	VW-011	1H0 498 099	VWIU-5021	191 498 103	VWIU-5021	191 498 103
GOLF III (1H1)	1.8 Sync ABS	AT/MT	1800	199108	199708	VW-011	1H0 498 099	VWIU-5021	191 498 103	VWIU-5021	191 498 103
GOLF III (1H1)	1.8 Sync ADZ	AT/MT	1800	199108	199708	VW-011	1H0 498 099	VWIU-5021	191 498 103	VWIU-5021	191 498 103
GOLF III (1H1)	1.9 TD,GTD AAZ	AT/MT	1900	199108	199708	VW-011	1H0 498 099	VWIU-5021	191 498 103	VWIU-5021	191 498 103
GOLF III (1H1)	2.0 2E	AT/MT	2000	199108	199708	VW-011	1H0 498 099	VWIU-5021	191 498 103	VWIU-5021	191 498 103
GOLF III (1H1)	2.0 ADY	AT/MT	2000	199108	199708	VW-011	1H0 498 099	VWIU-5021	191 498 103	VWIU-5021	191 498 103
GOLF III (1H1)	2.0 AGG	AT/MT	2000	199108	199708	VW-011	1H0 498 099	VWIU-5021	191 498 103	VWIU-5021	191 498 103
GOLF III (1H1)	2.0 AKR	AT/MT	2000	199108	199708	VW-011	1H0 498 099	VWIU-5021	191 498 103	VWIU-5021	191 498 103
GOLF III CABRIO (1E7)	1.8 AAM	AT/MT	1800	199307	199805	VW-011	1H0 498 099	VWIU-5021	191 498 103	VWIU-5021	191 498 103
GOLF III CABRIO (1E7)	1.8 ABS	AT/MT	1800	199307	199805	VW-011	1H0 498 099	VWIU-5021	191 498 103	VWIU-5021	191 498 103
GOLF III CABRIO (1E7)	1.8 ADZ	AT/MT	1800	199307	199805	VW-011	1H0 498 099	VWIU-5021	191 498 103	VWIU-5021	191 498 103
GOLF III CABRIO (1E7)	2.0 2E	AT/MT	2000	199307	199805	VW-011	1H0 498 099	VWIU-5021	191 498 103	VWIU-5021	191 498 103
GOLF III CABRIO (1E7)	2.0 ADY	AT/MT	2000	199307	199805	VW-011	1H0 498 099	VWIU-5021	191 498 103	VWIU-5021	191 498 103
GOLF III CABRIO (1E7)	2.0 AGG	AT/MT	2000	199307	199805	VW-011	1H0 498 099	VWIU-5021	191 498 103	VWIU-5021	191 498 103
GOLF III CABRIO (1E7)	2.0 AKR	AT/MT	2000	199307	199805	VW-011	1H0 498 099	VWIU-5021	191 498 103	VWIU-5021	191 498 103
GOLF III VARIANT (1H5)	1.6 AEK	AT/MT	1600	199307	199904	VW-011	1H0 498 099				
GOLF III VARIANT (1H5)	1.6 AFT	AT/MT	1600	199307	199904	VW-011	1H0 498 099				
GOLF III VARIANT (1H5)	1.6 AKS	AT/MT	1600	199307	199904	VW-011	1H0 498 099				
GOLF III VARIANT (1H5)	1.8 AAM	AT/MT	1800	199307	199904	VW-011	1H0 498 099	VWIU-5021	191 498 103	VWIU-5021	191 498 103
GOLF III VARIANT (1H5)	1.8 ABS	AT/MT	1800	199307	199904	VW-011	1H0 498 099	VWIU-5021	191 498 103	VWIU-5021	191 498 103
GOLF III VARIANT (1H5)	1.8 ADZ	AT/MT	1800	199307	199904	VW-011	1H0 498 099	VWIU-5021	191 498 103	VWIU-5021	191 498 103
GOLF III VARIANT (1H5)	1.8 Sync ADZ	AT/MT	1800	199307	199904	VW-011	1H0 498 099	VWIU-5021	191 498 103	VWIU-5021	191 498 103
GOLF III VARIANT (1H5)	1.9 TD AAZ	AT/MT	1900	199307	199904	VW-011	1H0 498 099	VWIU-5021	191 498 103	VWIU-5021	191 498 103
GOLF III VARIANT (1H5)	2.0 2E	AT/MT	2000	199307	199904	VW-011	1H0 498 099	VWIU-5021	191 498 103	VWIU-5021	191 498 103
GOLF III VARIANT (1H5)	2.0 ADY	AT/MT	2000	199307	199904	VW-011	1H0 498 099	VWIU-5021	191 498 103	VWIU-5021	191 498 103
GOLF III VARIANT (1H5)	2.0 AGG	AT/MT	2000	199307	199904	VW-011	1H0 498 099	VWIU-5021	191 498 103	VWIU-5021	191 498 103
GOLF III VARIANT (1H5)	2.0 AKR	AT/MT	2000	199307	199904	VW-011	1H0 498 099	VWIU-5021	191 498 103	VWIU-5021	191 498 103
GOLF IV (1J1)	1.4 16V AHW	AT/MT	1400	199705		AD-1241	1J0 498 099 A				
GOLF IV (1J1)	1.4 16V AHW	AT/MT	1400	199705		VW-029	1J0 498 099 E	VWIU-G41	1J0 498 103 K	VWIU-G41	1J0 498 103 K
GOLF IV (1J1)	1.4 16V AKQ	AT/MT	1400	199705		AD-1241	1J0 498 099 A				
GOLF IV (1J1)	1.4 16V AKQ	AT/MT	1400	199705		VW-029	1J0 498 099 E	VWIU-G41	1J0 498 103 K	VWIU-G41	1J0 498 103 K
GOLF IV (1J1)	1.4 16V APE	AT/MT	1400	199705		AD-1241	1J0 498 099 A				
GOLF IV (1J1)	1.4 16V APE	AT/MT	1400	199705		VW-029	1J0 498 099 E	VWIU-G41	1J0 498 103 K	VWIU-G41	1J0 498 103 K
GOLF IV (1J1)	1.4 16V AXP	AT/MT	1400	199705		AD-1241	1J0 498 099 A				
GOLF IV (1J1)	1.4 16V AXP	AT/MT	1400	199705		VW-029	1J0 498 099 E	VWIU-G41	1J0 498 103 K	VWIU-G41	1J0 498 103 K
GOLF IV (1J1)	1.4 16V BCA	AT/MT	1400	199705		AD-1241	1J0 498 099 A				
GOLF IV (1J1)	1.4 16V BCA	AT/MT	1400	199705		VW-029	1J0 498 099 E	VWIU-G41	1J0 498 103 K	VWIU-G41	1J0 498 103 K
GOLF IV (1J1)	1.6 AEH	AT/MT	1600	199705		AD-1241	1J0 498 099 A				
GOLF IV (1J1)	1.6 AEH	AT/MT	1600	199705		VW-029	1J0 498 099 E	VWIU-G41	1J0 498 103 K	VWIU-G41	1J0 498 103 K
GOLF IV (1J1)	1.6 AKL	AT/MT	1600	199705		AD-1241	1J0 498 099 A				
GOLF IV (1J1)	1.6 AKL	AT/MT	1600	199705		VW-029	1J0 498 099 E	VWIU-G41	1J0 498 103 K	VWIU-G41	1J0 498 103 K
GOLF IV (1J1)	1.6 APF	AT/MT	1600	199705		AD-1241	1J0 498 099 A				
GOLF IV (1J1)	1.6 APF	AT/MT	1600	199705		VW-029	1J0 498 099 E	VWIU-G41	1J0 498 103 K	VWIU-G41	1J0 498 103 K
GOLF IV (1J1)	1.8 AGN	AT/MT	1800	199705		VW-029	1J0 498 099 E	VWIU-G41	1J0 498 103 K	VWIU-G41	1J0 498 103 K
GOLF IV (1J1)	1.8 T AGU	AT/MT	1800	199705		VW-029	1J0 498 099 E	VWIU-G41	1J0 498 103 K	VWIU-G41	1J0 498 103 K
GOLF IV (1J1)	1.8 T AUM	AT/MT	1800	199705		VW-029	1J0 498 099 E	VWIU-G41	1J0 498 103 K	VWIU-G41	1J0 498 103 K
GOLF IV (1J1)	1.9 SDI AGP	AT/MT	1900	199705		AD-1241	1J0 498 099 A				
GOLF IV (1J1)	1.9 SDI AGP	AT/MT	1900	199705		VW-029	1J0 498 099 E	VWIU-G41	1J0 498 103 K	VWIU-G41	1J0 498 103 K
GOLF IV (1J1)	1.9 SDI AQM	AT/MT	1900	199705		AD-1241	1J0 498 099 A				
GOLF IV (1J1)	1.9 SDI AQM	AT/MT	1900	199705		VW-029	1J0 498 099 E	VWIU-G41	1J0 498 103 K	VWIU-G41	1J0 498 103 K
GOLF IV (1J1)	1.9 TDI AGR	AT/MT	1900	199705		VW-029	1J0 498 099 E	VWIU-G41	1J0 498 103 K	VWIU-G41	1J0 498 103 K
GOLF IV (1J1)	1.9 TDI AHF	AT/MT	1900	199705		VW-029	1J0 498 099 E	VWIU-G41	1J0 498 103 K	VWIU-G41	1J0 498 103 K
GOLF IV (1J1)	1.9 TDI ALH	AT/MT	1900	199705		VW-029	1J0 498 099 E	VWIU-G41	1J0 498 103 K	VWIU-G41	1J0 498 103 K
GOLF IV (1J1)	1.9 TDI ASV	AT/MT	1900	199705		VW-029	1J0 498 099 E	VWIU-G41	1J0 498 103 K	VWIU-G41	1J0 498 103 K
GOLF IV (1J1)	2.0 APK	AT/MT	2000	199705		VW-029	1J0 498 099 E	VWIU-G41	1J0 498 103 K	VWIU-G41	1J0 498 103 K
GOLF IV (1J1)	2.0 AQY	AT/MT	2000	199705		VW-029	1J0 498 099 E	VWIU-G41	1J0 498 103 K	VWIU-G41	1J0 498 103 K
GOLF IV (1J1)	2.0 AZG	AT/MT	2000	199705		VW-029	1J0 498 099 E	VWIU-G41	1J0 498 103 K	VWIU-G41	1J0 498 103 K
GOLF IV (1J1)	2.0 AZJ	AT/MT	2000	199705		VW-029	1J0 498 099 E	VWIU-G41	1J0 498 103 K	VWIU-G41	1J0 498 103 K
GOLF IV (1J1)	2.3 V5 AGZ	AT/MT	2300	199705		VW-029	1J0 498 099 E	VWIU-G41	1J0 498 103 K	VWIU-G41	1J0 498 103 K
GOLF IV VARIANT (1J5)	1.4 16V AHW	AT/MT	1400	199905		AD-1241	1J0 498 099 A				
GOLF IV VARIANT (1J5)	1.4 16V AHW	AT/MT	1400	199905		VW-029	1J0 498 099 E	VWIU-G41	1J0 498 103 K	VWIU-G41	1J0 498 103 K
GOLF IV VARIANT (1J5)	1.4 16V AKQ	AT/MT	1400	199905		AD-1241	1J0 498 099 A				
GOLF IV VARIANT (1J5)	1.4 16V AKQ	AT/MT	1400	199905		VW-029	1J0 498 099 E	VWIU-G41	1J0 498 103 K	VWIU-G41	1J0 498 103 K
GOLF IV VARIANT (1J5)	1.4 16V APE	AT/MT	1400	199905		AD-1241	1J0 498 099 A				
GOLF IV VARIANT (1J5)	1.4 16V APE	AT/MT	1400	199905		VW-029	1J0 498 099 E	VWIU-G41	1J0 498 103 K	VWIU-G41	1J0 498 103 K
GOLF IV VARIANT (1J5)	1.4 16V AXP	AT/MT	1400	199905		AD-1241	1J0 498 099 A				
GOLF IV VARIANT (1J5)	1.4 16V AXP	AT/MT	1400	199905		VW-029	1J0 498 099 E	VWIU-G41	1J0 498 103 K	VWIU-G41	1J0 498 103 K
GOLF IV VARIANT (1J5)	1.4 16V BCA	AT/MT	1400	199905		AD-1241	1J0 498 099 A				
GOLF IV VARIANT (1J5)	1.4 16V BCA	AT/MT	1400	199905		VW-029	1J0 498 099 E	VWIU-G41	1J0 498 103 K	VWIU-G41	1J0 498 103 K
GOLF IV VARIANT (1J5)	1.6 AEH	AT/MT	1600	199905		AD-1241	1J0 498 099 A				
GOLF IV VARIANT (1J5)	1.6 AEH	AT/MT	1600	199905		VW-029	1J0 498 099 E	VWIU-G41	1J0 498 103 K	VWIU-G41	1J0 498 103 K
GOLF IV VARIANT (1J5)	1.6 AKL	AT/MT	1600	199905		AD-1241	1J0 498 099 A				
GOLF IV VARIANT (1J5)	1.6 AKL	AT/MT	1600	199905		VW-029	1J0 498 099 E	VWIU-G41	1J0 498 103 K	VWIU-G41	1J0 498 103 K

VOLKSWAGEN

MODEL	ENGINE	AT/MT	CC	YEAR	YEAR	OUTER	O.E No.R	INNER R	O.E No.IR	INNER L	O.E No.IL
GOLF IV VARIANT (1J5)	1.6 APF	AT/MT	1600	199905		AD-1241	1J0 498 099 A				
GOLF IV VARIANT (1J5)	1.6 APF	AT/MT	1600	199905		VW-029	1J0 498 099 E	VWIU-G41	1J0 498 103 K	VWIU-G41	1J0 498 103 K
GOLF IV VARIANT (1J5)	1.9 SDI AGP	AT/MT	1900	199905		AD-1241	1J0 498 099 A				
GOLF IV VARIANT (1J5)	1.9 SDI AGP	AT/MT	1900	199905		VW-029	1J0 498 099 E	VWIU-G41	1J0 498 103 K	VWIU-G41	1J0 498 103 K
GOLF IV VARIANT (1J5)	1.9 SDI AQM	AT/MT	1900	199905		AD-1241	1J0 498 099 A				
GOLF IV VARIANT (1J5)	1.9 SDI AQM	AT/MT	1900	199905		VW-029	1J0 498 099 E	VWIU-G41	1J0 498 103 K	VWIU-G41	1J0 498 103 K
GOLF IV VARIANT (1J5)	1.9 TDI AGR	AT/MT	1900	199905		VW-029	1J0 498 099 E	VWIU-G41	1J0 498 103 K	VWIU-G41	1J0 498 103 K
GOLF IV VARIANT (1J5)	1.9 TDI AHF	AT/MT	1900	199905		VW-029	1J0 498 099 E	VWIU-G41	1J0 498 103 K	VWIU-G41	1J0 498 103 K
GOLF IV VARIANT (1J5)	1.9 TDI ALH	AT/MT	1900	199905		VW-029	1J0 498 099 E	VWIU-G41	1J0 498 103 K	VWIU-G41	1J0 498 103 K
GOLF IV VARIANT (1J5)	1.9 TDI ASV	AT/MT	1900	199905		VW-029	1J0 498 099 E	VWIU-G41	1J0 498 103 K	VWIU-G41	1J0 498 103 K
GOLF IV VARIANT (1J5)	2.3 V5 AGZ	AT/MT	2300	199905		VW-029	1J0 498 099 E	VWIU-G41	1J0 498 103 K	VWIU-G41	1J0 498 103 K
GOLF V											
1K1	BUD	5MT	1400	200605			1K0 498 099 D		1K0 498 103 B		1K0 498 103 B
1K1	CAXA	6MT	1400	200707		VW-B61	1K0 498 099	VWIU-5021	1K0 498 103	VWIU-5021	1K0 498 103
1K1	BMY	6MT	1400	200605		VW-B61	1K0 498 099	VWIU-5021	1K0 498 103	VWIU-5021	1K0 498 103
1K1	BLG	6MT	1400	200605		VW-B62	1K0 498 099 B	VWIU-B6M1	1K0 498 103 A	VWIU-B6M1	1K0 498 103 A
1K1	BLG	6AT	1400	200605		VW-B62	1K0 498 099 B	VWIU-B6M1	1K0 498 103 A	VWIU-B6M1	1K0 498 103 A
1K1	BMY	6AT	1400	200605		VW-B62	1K0 498 099 B	VWIU-B6M1	1K0 498 103 A	VWIU-B6M1	1K0 498 103 A
1K1	CAXA	7T DSG	1400	200707		VW-B62	1K0 498 099 B		5N0 498 103		5N0 498 103
1K1	BSE	5MT	1600	200505		VW-B61	1K0 498 099	VWIU-5021	1K0 498 103	VWIU-5021	1K0 498 103
1K1	BSF	5MT	1600	200705		VW-B61	1K0 498 099	VWIU-5021	1K0 498 103	VWIU-5021	1K0 498 103
1K1	CCSA	5MT	1600	200801		VW-B61	1K0 498 099	VWIU-5021	1K0 498 103	VWIU-5021	1K0 498 103
1K1	BLF	6MT	1600	200501	200805	VW-B61	1K0 498 099	VWIU-5021	1K0 498 103	VWIU-5021	1K0 498 103
1K1	BSE	6AT	1600	200505		VW-B61	1K0 498 099		1K0 498 103 C		1K0 498 103 C
1K1	BSF	6AT	1600	200705		VW-B61	1K0 498 099		1K0 498 103 C		1K0 498 103 C
1K1	BLF	6AT	1600	200501	200805	VW-B61	1K0 498 099		1K0 498 103 C		1K0 498 103 C
1K1	BLS	5MT	1900	200506		VW-B61	1K0 498 099	VWIU-5021	1K0 498 103	VWIU-5021	1K0 498 103
1K1	BXE	5MT	1900	200602		VW-B61	1K0 498 099	VWIU-5021	1K0 498 103	VWIU-5021	1K0 498 103
1K1	BXF	5MT	1900	200602		VW-B61	1K0 498 099	VWIU-5021	1K0 498 103	VWIU-5021	1K0 498 103
1K1	BXJ	5MT	1900	200602		VW-B61	1K0 498 099	VWIU-5021	1K0 498 103	VWIU-5021	1K0 498 103
1K1	BLS	6MT	1900	200506		VW-B61	1K0 498 099	VWIU-5021	1K0 498 103	VWIU-5021	1K0 498 103
1K1	BXE	6MT	1900	200602		VW-B61	1K0 498 099	VWIU-5021	1K0 498 103	VWIU-5021	1K0 498 103
1K1 4Motion	BLS	6MT	1900	200506		VW-B62	1K0 498 099 B	VWIU-B6M1	1K0 498 103 A	VWIU-B6M1	1K0 498 103 A
1K1 4Motion	BXE	6MT	1900	200602		VW-B62	1K0 498 099 B	VWIU-B6M1	1K0 498 103 A	VWIU-B6M1	1K0 498 103 A
1K1	BLS	6AT	1900	200506		VW-B62	1K0 498 099 B	VWIU-B6A1	1K0 498 103 E	VWIU-B6A1	1K0 498 103 E
1K1	BXE	6AT	1900	200602		VW-B62	1K0 498 099 B	VWIU-B6A1	1K0 498 103 E	VWIU-B6A1	1K0 498 103 E
1K1	BLS	7T DSG	1900	200506		VW-B62	1K0 498 099 B		5N0 498 103		5N0 498 103
1K1	BDK	5MT	2000	200401		VW-B61	1K0 498 099	VWIU-5021	1K0 498 103	VWIU-5021	1K0 498 103
1K1	BVX	6MT	2000	200511		VW-B61	1K0 498 099	VWIU-5021	1K0 498 103	VWIU-5021	1K0 498 103
1K1	BVY	6MT	2000	200506		VW-B61	1K0 498 099	VWIU-5021	1K0 498 103	VWIU-5021	1K0 498 103
1K1	BVZ	6MT	2000	200511		VW-B61	1K0 498 099	VWIU-5021	1K0 498 103	VWIU-5021	1K0 498 103
1K1	BPY	6MT	2000	200510		VW-B62	1K0 498 099 B	VWIU-B6M1	1K0 498 103 A	VWIU-B6M1	1K0 498 103 A
1K1	BWA	6MT	2000	200511		VW-B62	1K0 498 099 B	VWIU-B6M1	1K0 498 103 A	VWIU-B6M1	1K0 498 103 A
1K1	BYD	6MT	2000	200507		VW-B62	1K0 498 099 B	VWIU-B6M1	1K0 498 103 A	VWIU-B6M1	1K0 498 103 A
1K1	CBFA	6MT	2000	200803		VW-B62	1K0 498 099 B	VWIU-B6M1	1K0 498 103 A	VWIU-B6M1	1K0 498 103 A
1K1	CCTA	6MT	2000	200803		VW-B62	1K0 498 099 B	VWIU-B6M1	1K0 498 103 A	VWIU-B6M1	1K0 498 103 A
1K1	AZV	6MT	2000	200310		VW-B62	1K0 498 099 B	VWIU-B6M1	1K0 498 103 A	VWIU-B6M1	1K0 498 103 A
1K1	BKD	6MT	2000	200310		VW-B62	1K0 498 099 B	VWIU-B6M1	1K0 498 103 A	VWIU-B6M1	1K0 498 103 A
1K1	BMM	6MT	2000	200412		VW-B62	1K0 498 099 B	VWIU-B6M1	1K0 498 103 A	VWIU-B6M1	1K0 498 103 A
1K1	BMN	6MT	2000	200511			3C0 498 099	VWIU-B6M1	1K0 498 103 A	VWIU-B6M1	1K0 498 103 A
1K1 4Motion	BVX	6MT	2000	200511		VW-B61	1K0 498 099	VWIU-5021	1K0 498 103	VWIU-5021	1K0 498 103
1K1 4Motion	BKD	6MT	2000	200310		VW-B62	1K0 498 099 B	VWIU-B6M1	1K0 498 103 A	VWIU-B6M1	1K0 498 103 A
1K1 4Motion	BMM	6MT	2000	200412		VW-B62	1K0 498 099 B	VWIU-B6M1	1K0 498 103 A	VWIU-B6M1	1K0 498 103 A
1K1	BVY	6AT	2000	200506		VW-B61	1K0 498 099		1K0 498 103 C		1K0 498 103 C
1K1	BVZ	6AT	2000	200511		VW-B61	1K0 498 099		1K0 498 103 C		1K0 498 103 C
1K1	BPY	6AT	2000	200510		VW-B62	1K0 498 099 B	VWIU-B6M1	1K0 498 103 A	VWIU-B6M1	1K0 498 103 A
1K1	BWA	6AT	2000	200511		VW-B62	1K0 498 099 B	VWIU-B6M1	1K0 498 103 A	VWIU-B6M1	1K0 498 103 A
1K1	BYD	6AT	2000	200507		VW-B62	1K0 498 099 B	VWIU-B6M1	1K0 498 103 A	VWIU-B6M1	1K0 498 103 A
1K1	CBFA	6AT	2000	200803		VW-B62	1K0 498 099 B	VWIU-B6M1	1K0 498 103 A	VWIU-B6M1	1K0 498 103 A
1K1	CCTA	6AT	2000	200803		VW-B62	1K0 498 099 B	VWIU-B6M1	1K0 498 103 A	VWIU-B6M1	1K0 498 103 A
1K1	AZV	6AT	2000	200310		VW-B62	1K0 498 099 B	VWIU-B6A1	1K0 498 103 E	VWIU-B6A1	1K0 498 103 E
1K1	BKD	6AT	2000	200310		VW-B62	1K0 498 099 B	VWIU-B6A1	1K0 498 103 E	VWIU-B6A1	1K0 498 103 E
1K1	BMM	6AT	2000	200412		VW-B62	1K0 498 099 B	VWIU-B6A1	1K0 498 103 E	VWIU-B6A1	1K0 498 103 E
1K1	BMN	6AT	2000	200511			3C0 498 099	VWIU-B6A1	1K0 498 103 E	VWIU-B6A1	1K0 498 103 E
1K1 4Motion	BUB	6MT	3200	200511		VW-B62	1K0 498 099 B	VWIU-B6M1	1K0 498 103 A	VWIU-B6M1	1K0 498 103 A
1K1 4Motion	BUB	6AT	3200	200511		VW-B62	1K0 498 099 B	VWIU-B6M1	1K0 498 103 A	VWIU-B6M1	1K0 498 103 A
1K5 Variant	BUD	5MT	1400	200605		VW-B61	1K0 498 099	VWIU-5021	1K0 498 103	VWIU-5021	1K0 498 103
1K5 Variant	CAXA	6MT	1400	200707		VW-B61	1K0 498 099	VWIU-5021	1K0 498 103	VWIU-5021	1K0 498 103
1K5 Variant	BLG	6MT	1400	200605		VW-B61	1K0 498 099	VWIU-5021	1K0 498 103	VWIU-5021	1K0 498 103
1K5 Variant	BMY	6MT	1400	200605		VW-B61	1K0 498 099	VWIU-5021	1K0 498 103	VWIU-5021	1K0 498 103
1K5 Variant	BMY	6AT	1400	200605			1K0 498 099 D		1K0 498 103 B		1K0 498 103 B
1K5 Variant	BLG	6AT	1400	200605		VW-B61	1K0 498 099	VWIU-5021	1K0 498 103	VWIU-5021	1K0 498 103
1K5 Variant	CAXA	7T DSG	1400	200707		VW-B62	1K0 498 099 B		5N0 498 103		5N0 498 103
1K5 Variant	BSF	5MT	1600	200705		VW-B61	1K0 498 099	VWIU-5021	1K0 498 103	VWIU-5021	1K0 498 103
1K5 Variant	CCSA	5MT	1600	200801		VW-B62	1K0 498 099 B	VWIU-B6M1	1K0 498 103 A	VWIU-B6M1	1K0 498 103 A
1K5 Variant	BSF	6AT	1600	200705		VW-B62	1K0 498 099 B	VWIU-B6M1	1K0 498 103 A	VWIU-B6M1	1K0 498 103 A
1K5 Variant	BXE	5MT	1900	200602		VW-B62	1K0 498 099 B	VWIU-B6M1	1K0 498 103 A	VWIU-B6M1	1K0 498 103 A
1K5 Variant	BLS	5MT	1900	200506		VW-B62	1K0 498 099 B	VWIU-B6M1	1K0 498 103 A	VWIU-B6M1	1K0 498 103 A
1K5 Variant 4Motion	BLS	6MT	1900	200506		VW-B62	1K0 498 099 B	VWIU-B6M1	1K0 498 103 A	VWIU-B6M1	1K0 498 103 A
1K5 Variant	BLS	6AT	1900	200506		VW-B61	1K0 498 099		1K0 498 103 C		1K0 498 103 C
1K5 Variant	BXE	6AT	1900	200602		VW-B62	1K0 498 099 B	VWIU-B6M1	1K0 498 103 A	VWIU-B6M1	1K0 498 103 A
1K5 Variant	BLS	7T DSG	1900	200506		VW-B62	1K0 498 099 B		5N0 498 103		5N0 498 103
1K5 Variant	BWA	6MT	2000	200511		VW-B62	1K0 498 099 B	VWIU-B6M1	1K0 498 103 A	VWIU-B6M1	1K0 498 103 A
1K5 Variant	AZV	6MT	2000	200310		VW-B62	1K0 498 099 B	VWIU-B6M1	1K0 498 103 A	VWIU-B6M1	1K0 498 103 A
1K5 Variant	BKD	6MT	2000	200310		VW-B62	1K0 498 099 B	VWIU-B6A1	1K0 498 103 E	VWIU-B6A1	1K0 498 103 E
1K5 Variant	BMM	6MT	2000	200412		VW-B62	1K0 498 099 B	VWIU-B6A1	1K0 498 103 E	VWIU-B6A1	1K0 498 103 E
1K5 Variant	BWA	6T DSG	2000	200511		VW-B62	1K0 498 099 B	VWIU-B6A1	1K0 498 103 E	VWIU-B6A1	1K0 498 103 E
1K5 Variant	CCTA	6T DSG	2000	200803		VW-B62	1K0 498 099 B		5N0 498 103		5N0 498 103
1K5 Variant	BMM	6AT	2000	200412		VW-B62	1K0 498 099 B		5N0 498 103		5N0 498 103
GOLF PLUS											

VOLKSWAGEN

MODEL	ENGINE	AT/MT	CC	YEAR	YEAR	OUTER	O.E No.R	INNER R	O.E No.IR	INNER L	O.E No.IL
5M1	BUD	5MT	1400	200605			1K0 498 099 D		1K0 498 103 B		1K0 498 103 B
5M1	CAXA	6MT	1400	200707		VW-B61	1K0 498 099	VWIU-5021	1K0 498 103	VWIU-5021	1K0 498 103
5M1	BMY	6MT	1400	200605		VW-B61	1K0 498 099	VWIU-5021	1K0 498 103	VWIU-5021	1K0 498 103
5M1	BLG	6MT	1400	200605		VW-B62	1K0 498 099 B	VWIU-B6M1	1K0 498 103 A	VWIU-B6M1	1K0 498 103 A
5M1	BLG	6AT	1400	200605		VW-B62	1K0 498 099 B	VWIU-B6M1	1K0 498 103 A	VWIU-B6M1	1K0 498 103 A
5M1	BMY	6AT	1400	200605		VW-B62	1K0 498 099 B	VWIU-B6M1	1K0 498 103 A	VWIU-B6M1	1K0 498 103 A
5M1	CAXA	7T DSG	1400	200707		VW-B62	1K0 498 099 B		5N0 498 103		5N0 498 103
5M1	BSE	5MT	1600	200505		VW-B61	1K0 498 099	VWIU-5021	1K0 498 103	VWIU-5021	1K0 498 103
5M1	BSF	5MT	1600	200705		VW-B61	1K0 498 099	VWIU-5021	1K0 498 103	VWIU-5021	1K0 498 103
5M1	CCSA	5MT	1600	200801		VW-B61	1K0 498 099	VWIU-5021	1K0 498 103	VWIU-5021	1K0 498 103
5M1	BLF	6MT	1600	200501	200805	VW-B61	1K0 498 099	VWIU-5021	1K0 498 103	VWIU-5021	1K0 498 103
5M1	BSE	6AT	1600	200505		VW-B61	1K0 498 099		1K0 498 103 C		1K0 498 103 C
5M1	BSF	6AT	1600	200705		VW-B61	1K0 498 099		1K0 498 103 C		1K0 498 103 C
5M1	BLF	6AT	1600	200501	200805	VW-B61	1K0 498 099		1K0 498 103 C		1K0 498 103 C
5M1	BLS	5MT	1900	200506		VW-B61	1K0 498 099	VWIU-5021	1K0 498 103	VWIU-5021	1K0 498 103
5M1	BXJ	5MT	1900	200602		VW-B61	1K0 498 099	VWIU-5021	1K0 498 103	VWIU-5021	1K0 498 103
5M1	BXE	5MT	1900	200602		VW-B61	1K0 498 099	VWIU-5021	1K0 498 103	VWIU-5021	1K0 498 103
5M1	BXF	5MT	1900	200602		VW-B61	1K0 498 099	VWIU-5021	1K0 498 103	VWIU-5021	1K0 498 103
5M1	BLS	5MT	1900	200506		VW-B61	1K0 498 099	VWIU-5021	1K0 498 103	VWIU-5021	1K0 498 103
5M1 CROSS GOLF	BXE	6AT	1900	200602			3C0 498 099	VWIU-B6A1	1K0 498 103 E	VWIU-B6A1	1K0 498 103 E
5M1	BXE	6AT	1900	200602		VW-B62	1K0 498 099 B	VWIU-B6A1	1K0 498 103 E	VWIU-B6A1	1K0 498 103 E
5M1	BLS	7T DSG	1900	200506		VW-B62	1K0 498 099 B		5N0 498 103		5N0 498 103
5M1	BVY	6MT	2000	200506		VW-B61	1K0 498 099	VWIU-5021	1K0 498 103	VWIU-5021	1K0 498 103
5M1	BVZ	6MT	2000	200511		VW-B61	1K0 498 099	VWIU-5021	1K0 498 103	VWIU-5021	1K0 498 103
5M1 CROSS GOLF	AZV	6MT	2000	200310			3C0 498 099	VWIU-B6M1	1K0 498 103 A	VWIU-B6M1	1K0 498 103 A
5M1 CROSS GOLF	BKD	6MT	2000	200310			3C0 498 099	VWIU-B6M1	1K0 498 103 A	VWIU-B6M1	1K0 498 103 A
5M1 CROSS GOLF	BMM	6MT	2000	200412			3C0 498 099	VWIU-B6M1	1K0 498 103 A	VWIU-B6M1	1K0 498 103 A
5M1	AZV	6MT	2000	200310		VW-B62	1K0 498 099 B	VWIU-B6M1	1K0 498 103 A	VWIU-B6M1	1K0 498 103 A
5M1	BKD	6MT	2000	200310		VW-B62	1K0 498 099 B	VWIU-B6M1	1K0 498 103 A	VWIU-B6M1	1K0 498 103 A
5M1	BMM	6MT	2000	200412		VW-B62	1K0 498 099 B	VWIU-B6M1	1K0 498 103 A	VWIU-B6M1	1K0 498 103 A
5M1	BVY	6AT	2000	200506		VW-B61	1K0 498 099		1K0 498 103 C		1K0 498 103 C
5M1	BVZ	6AT	2000	200511		VW-B61	1K0 498 099		1K0 498 103 C		1K0 498 103 C
5M1 CROSS GOLF	AZV	6AT	2000	200310			3C0 498 099	VWIU-B6A1	1K0 498 103 E	VWIU-B6A1	1K0 498 103 E
5M1 CROSS GOLF	BKD	6AT	2000	200310			3C0 498 099	VWIU-B6A1	1K0 498 103 E	VWIU-B6A1	1K0 498 103 E
5M1 CROSS GOLF	BMM	6AT	2000	200412			3C0 498 099	VWIU-B6A1	1K0 498 103 E	VWIU-B6A1	1K0 498 103 E
5M1	AZV	6AT	2000	200310		VW-B62	1K0 498 099 B	VWIU-B6A1	1K0 498 103 E	VWIU-B6A1	1K0 498 103 E
5M1	BKD	6AT	2000	200310		VW-B62	1K0 498 099 B	VWIU-B6A1	1K0 498 103 E	VWIU-B6A1	1K0 498 103 E
5M1	BMM	6AT	2000	200412		VW-B62	1K0 498 099 B	VWIU-B6A1	1K0 498 103 E	VWIU-B6A1	1K0 498 103 E

JETTA

JETTA I (17)	1.1 GG	AT/MT	1100	197908	198501	VW-001	171 498 099	VWIU-5016	171 498 103 B	VWIU-5016	171 498 103 B
JETTA I (17)	1.1 GG	AT/MT	1100	197908	198501	VW-002	171 498 099 BX	VWIU-5016	171 498 103 DX	VWIU-5016	171 498 103 DX
JETTA I (17)	1.3 GF	AT/MT	1300	197908	198501	VW-001	171 498 099	VWIU-5016	171 498 103 B	VWIU-5016	171 498 103 B
JETTA I (17)	1.3 GF	AT/MT	1300	197908	198501	VW-002	171 498 099 BX	VWIU-5016	171 498 103 DX	VWIU-5016	171 498 103 DX
JETTA I (17)	1.5 D CK	AT/MT	1500	197908	198501	VW-002	171 498 099 BX				
JETTA I (17)	1.5 JB	AT/MT	1500	197908	198501	VW-002	171 498 099 BX				
JETTA I (17)	1.6 D CR	AT/MT	1600	197908	198501	VW-002	171 498 099 BX				
JETTA I (17)	1.6 D JK	AT/MT	1600	197908	198501	VW-002	171 498 099 BX				
JETTA I (17)	1.6 FR	AT/MT	1600	197908	198501	VW-002	171 498 099 BX				
JETTA I (17)	1.6 GLI EG	AT/MT	1600	197908	198501	VW-001	171 498 099				
JETTA I (17)	1.6 GLI EG	AT/MT	1600	197908	198501	VW-002	171 498 099 BX				
JETTA I (17)	1.6 TD CY	AT/MT	1600	197908	198501	VW-002	171 498 099 BX				
JETTA I (17)	1.8 DX	AT/MT	1800	197908	198501	VW-002	171 498 099 BX				
JETTA II (19E, 1G2)	1.8 16V KR	AT/MT	1800	198401	199212	VW-011	1H0 498 099	VWIU-5021	191 498 103	VWIU-5021	191 498 103
JETTA II (19E, 1G2)	1.8 16V PL	AT/MT	1800	198401	199212	VW-011	1H0 498 099	VWIU-5021	191 498 103	VWIU-5021	191 498 103
JETTA II (19E, 1G2)	1.8 EV	AT/MT	1800	198401	199212	VW-011	1H0 498 099	VWIU-5021	191 498 103	VWIU-5021	191 498 103
JETTA II (19E, 1G2)	1.8 GU	AT/MT	1800	198401	199212	VW-011	1H0 498 099	VWIU-5021	191 498 103	VWIU-5021	191 498 103
JETTA II (19E, 1G2)	1.8 GX	AT/MT	1800	198401	199212	VW-011	1H0 498 099	VWIU-5021	191 498 103	VWIU-5021	191 498 103
JETTA II (19E, 1G2)	1.8 GZ	AT/MT	1800	198401	199212	VW-011	1H0 498 099	VWIU-5021	191 498 103	VWIU-5021	191 498 103
JETTA II (19E, 1G2)	1.8 HV	AT/MT	1800	198401	199212	VW-011	1H0 498 099	VWIU-5021	191 498 103	VWIU-5021	191 498 103
JETTA II (19E, 1G2)	1.8 KAT GX	AT/MT	1800	198401	199212	VW-011	1H0 498 099	VWIU-5021	191 498 103	VWIU-5021	191 498 103
JETTA II (19E, 1G2)	1.8 KAT PF	AT/MT	1800	198401	199212	VW-011	1H0 498 099	VWIU-5021	191 498 103	VWIU-5021	191 498 103
JETTA II (19E, 1G2)	1.8 KAT RP	AT/MT	1800	198401	199212	VW-011	1H0 498 099	VWIU-5021	191 498 103	VWIU-5021	191 498 103
JETTA II (19E, 1G2)	1.8 PB	AT/MT	1800	198401	199212	VW-011	1H0 498 099	VWIU-5021	191 498 103	VWIU-5021	191 498 103
JETTA II (19E, 1G2)	1.8 RD	AT/MT	1800	198401	199212	VW-011	1H0 498 099	VWIU-5021	191 498 103	VWIU-5021	191 498 103
JETTA II (19E, 1G2)	1.8 RH	AT/MT	1800	198401	199212	VW-011	1H0 498 099	VWIU-5021	191 498 103	VWIU-5021	191 498 103
JETTA II (19E, 1G2)	1.8 Sync 1P	AT/MT	1800	198401	199212	VW-010	321 498 099 E	VWIU-5021	191 498 103	VWIU-5021	191 498 103
JETTA II (19E, 1G2)	1.8 Sync 1P	AT/MT	1800	198401	199212	VW-011	1H0 498 099	VWIU-5021	191 498 103	VWIU-5021	191 498 103
JETTA II (19E, 1G2)	1.8 Sync RP	AT/MT	1800	198401	199212	VW-010	321 498 099 E	VWIU-5021	191 498 103	VWIU-5021	191 498 103
JETTA II (19E, 1G2)	1.8 Sync RP	AT/MT	1800	198401	199212	VW-011	1H0 498 099	VWIU-5021	191 498 103	VWIU-5021	191 498 103
1K2	CAXA	6MT	1400	200707		VW-B61	1K0 498 099	VWIU-5021	1K0 498 103	VWIU-5021	1K0 498 103
1K2	BMY	6MT	1400	200607		VW-B61	1K0 498 099	VWIU-5021	1K0 498 103	VWIU-5021	1K0 498 103
1K2	BLG	6MT	1400	200607		VW-B62	1K0 498 099 B	VWIU-B6M1	1K0 498 103 A	VWIU-B6M1	1K0 498 103 A
1K2	BLG	6AT	1400	200607		VW-B62	1K0 498 099 B	VWIU-B6M1	1K0 498 103 A	VWIU-B6M1	1K0 498 103 A
1K2	BMY	6AT	1400	200607		VW-B62	1K0 498 099 B	VWIU-B6M1	1K0 498 103 A	VWIU-B6M1	1K0 498 103 A
1K2	CAXA	7T DSG	1400	200707		VW-B62	1K0 498 099 B		5N0 498 103		5N0 498 103
1K2	BSE	5MT	1600	200508		VW-B61	1K0 498 099	VWIU-5021	1K0 498 103	VWIU-5021	1K0 498 103
1K2	BSF	5MT	1600	200510		VW-B61	1K0 498 099	VWIU-5021	1K0 498 103	VWIU-5021	1K0 498 103
1K2	CCSA	5MT	1600	200801		VW-B61	1K0 498 099	VWIU-5021	1K0 498 103	VWIU-5021	1K0 498 103
1K2	BLF	6MT	1600	200509		VW-B61	1K0 498 099	VWIU-5021	1K0 498 103	VWIU-5021	1K0 498 103
1K2	BSE	6AT	1600	200508		VW-B61	1K0 498 099		1K0 498 103 C		1K0 498 103 C
1K2	BSF	6AT	1600	200510		VW-B61	1K0 498 099		1K0 498 103 C		1K0 498 103 C
1K2	BKC	5MT	1900	200508	200602	VW-B61	1K0 498 099	VWIU-5021	1K0 498 103	VWIU-5021	1K0 498 103
1K2	BLS	5MT	1900	200508		VW-B61	1K0 498 099	VWIU-5021	1K0 498 103	VWIU-5021	1K0 498 103
1K2	BXE	5MT	1900	200512		VW-B61	1K0 498 099	VWIU-5021	1K0 498 103	VWIU-5021	1K0 498 103
1K2	BKC	6AT	1900	200508	200602	VW-B62	1K0 498 099 B	VWIU-B6A1	1K0 498 103 E	VWIU-B6A1	1K0 498 103 E
1K2	BLS	6AT	1900	200508		VW-B62	1K0 498 099 B	VWIU-B6A1	1K0 498 103 E	VWIU-B6A1	1K0 498 103 E
1K2	BXE	6AT	1900	200512		VW-B62	1K0 498 099 B	VWIU-B6A1	1K0 498 103 E	VWIU-B6A1	1K0 498 103 E
1K2	BLS	7T DSG	1900	200508		VW-B62	1K0 498 099 B		5N0 498 103		5N0 498 103
1K2	BLR	6MT	2000	200508	200511	VW-B61	1K0 498 099	VWIU-5021	1K0 498 103	VWIU-5021	1K0 498 103
1K2	BLY	6MT	2000	200510	200511	VW-B61	1K0 498 099	VWIU-5021	1K0 498 103	VWIU-5021	1K0 498 103

VOLKSWAGEN

MODEL	ENGINE	AT/MT	CC	YEAR	YEAR	OUTER	O.E No.R	INNER R	O.E No.IR	INNER L	O.E No.IL
1K2	BWA	6MT	2000	200509		VW-B62	1K0 498 099 B	VWIU-B6M1	1K0 498 103 A	VWIU-B6M1	1K0 498 103 A
1K2	BMN	6MT	2000	200606			3C0 498 099		3C0 498 103		3C0 498 103
1K2	AZV	6MT	2000	200509		VW-B62	1K0 498 099 B	VWIU-B6M1	1K0 498 103 A	VWIU-B6M1	1K0 498 103 A
1K2	BKD	6MT	2000	200508		VW-B62	1K0 498 099 B	VWIU-B6M1	1K0 498 103 A	VWIU-B6M1	1K0 498 103 A
1K2	BMM	6MT	2000	200601		VW-B62	1K0 498 099 B	VWIU-B6M1	1K0 498 103 A	VWIU-B6M1	1K0 498 103 A
1K2	BLR	6AT	2000	200508		VW-B61	1K0 498 099		1K0 498 103 C		1K0 498 103 C
1K2	BLY	6AT	2000	200510		VW-B61	1K0 498 099		1K0 498 103 C		1K0 498 103 C
1K2	BVY	6AT	2000	200512		VW-B61	1K0 498 099		1K0 498 103 C		1K0 498 103 C
1K2	BWA	6AT	2000	200509		VW-B62	1K0 498 099 B	VWIU-B6M1	1K0 498 103 A	VWIU-B6M1	1K0 498 103 A
1K2	BPY	6AT	2000	200506		VW-B62	1K0 498 099 B	VWIU-B6M1	1K0 498 103 A	VWIU-B6M1	1K0 498 103 A
1K2	CCTA	6AT	2000	200802		VW-B62	1K0 498 099 B	VWIU-B6M1	1K0 498 103 A	VWIU-B6M1	1K0 498 103 A
1K2	AZV	6AT	2000	200509		VW-B62	1K0 498 099 B	VWIU-B6A1	1K0 498 103 E	VWIU-B6A1	1K0 498 103 E
1K2	BKD	6AT	2000	200508		VW-B62	1K0 498 099 B	VWIU-B6A1	1K0 498 103 E	VWIU-B6A1	1K0 498 103 E
1K2	BMM	6AT	2000	200601		VW-B62	1K0 498 099 B	VWIU-B6A1	1K0 498 103 E	VWIU-B6A1	1K0 498 103 E
1K2 >>1K-7-299 000	BGP	5MT	2500	200601				VWIU-5021	1K0 498 103	VWIU-5021	1K0 498 103
1K2>>1K-7-299 000	BTK	5MT	2500	200607	200706			VWIU-5021	1K0 498 103	VWIU-5021	1K0 498 103
1K2 1K-7-299 001>>	CCCA	5MT	2500	200802		VW-B61	1K0 498 099	VWIU-5021	1K0 498 103	VWIU-5021	1K0 498 103
1K2	BGP	6AT	2500	200601		VW-B62	1KM 498 099		1KM 498 103		1KM 498 103
1K2	BTK	6AT	2500	200607	200706	VW-B62	1KM 498 099		1KM 498 103		1KM 498 103
1K2	CCCA	6AT	2500	200802		VW-B62	1KM 498 099		1KM 498 103		1KM 498 103
NEW BEETLE											
NEW BEETLE (9C1, 1C1)	1.9 TDI ALH	AT/MT	1900	199801		VW-029	1J0 498 099 E				
NEW BEETLE (9C1, 1C1)	2.0 AEG	AT/MT	2000	199801		VW-029	1J0 498 099 E				
NEW BEETLE (9C1, 1C1)	2.0 APK	AT/MT	2000	199801		VW-029	1J0 498 099 E				
NEW BEETLE (9C1, 1C1)	2.0 AQY	AT/MT	2000	199801		VW-029	1J0 498 099 E				
NEW BEETLE (9C1, 1C1)	2.0 AZG	AT/MT	2000	199801		VW-029	1J0 498 099 E				
PASSAT											
PASSAT (32B)	1.3 EP	AT/MT	1300	198008	198812	VW-010	321 498 099 E				
PASSAT (32B)	1.3 EU	AT/MT	1300	198008	198812	VW-010	321 498 099 E				
PASSAT (32B)	1.3 FY	AT/MT	1300	198008	198812	VW-010	321 498 099 E				
PASSAT (32B)	1.3 FZ	AT/MT	1300	198008	198812	VW-010	321 498 099 E				
PASSAT (32B)	1.6 D CR	AT/MT	1600	198008	198812	VW-010	321 498 099 E				
PASSAT (32B)	1.6 D JK	AT/MT	1600	198008	198812	VW-010	321 498 099 E				
PASSAT (32B)	1.6 DT	AT/MT	1600	198008	198812	VW-010	321 498 099 E				
PASSAT (32B)	1.6 PP	AT/MT	1600	198008	198812	VW-010	321 498 099 E				
PASSAT (32B)	1.6 RF	AT/MT	1600	198008	198812	VW-010	321 498 099 E				
PASSAT (32B)	1.6 RL	AT/MT	1600	198008	198812	VW-010	321 498 099 E				
PASSAT (32B)	1.6 TD CY	AT/MT	1600	198008	198812	VW-010	321 498 099 E				
PASSAT (32B)	1.6 WV	AT/MT	1600	198008	198812	VW-010	321 498 099 E				
PASSAT (32B)	1.6 YN	AT/MT	1600	198008	198812	VW-010	321 498 099 E				
PASSAT (32B)	1.6 YP	AT/MT	1600	198008	198812	VW-010	321 498 099 E				
PASSAT (32B)	1.8 DS	AT/MT	1800	198008	198812	VW-010	321 498 099 E				
PASSAT (32B)	1.8 DZ	AT/MT	1800	198008	198812	VW-011	357 498 099 X	VWIU-5021	191 498 103	VWIU-5021	191 498 103
PASSAT (32B)	1.8 JN	AT/MT	1800	198008	198812	VW-010	321 498 099 E				
PASSAT (32B)	1.8 RM	AT/MT	1800	198008	198812	VW-010	321 498 099 E				
PASSAT (32B)	1.9 WN	AT/MT	1900	198008	198812	VW-010	321 498 099 E	VWIU-5021	191 498 103	VWIU-5021	191 498 103
PASSAT (32B)	2.0 HP	AT/MT	2000	198008	198812	VW-010	321 498 099 E	VWIU-5021	191 498 103	VWIU-5021	191 498 103
PASSAT (32B)	2.0 JS	AT/MT	2000	198008	198812	VW-010	321 498 099 E	VWIU-5021	191 498 103	VWIU-5021	191 498 103
PASSAT (3A2, 35I)	1.6 TD RA	AT/MT	1600	198802	199608	VW-011	357 498 099 X	VWIU-5021	191 498 103	VWIU-5021	191 498 103
PASSAT (3A2, 35I)	1.6 TD SB	AT/MT	1600	198802	199608	VW-011	357 498 099 X	VWIU-5021	191 498 103	VWIU-5021	191 498 103
PASSAT (3A2, 35I)	1.8 16V KR	AT/MT	1800	198802	199608	VW-011	357 498 099 X	VWIU-5021	191 498 103	VWIU-5021	191 498 103
PASSAT (3A2, 35I)	1.8 AAM	AT/MT	1800	198802	199608	VW-011	357 498 099 X	VWIU-5021	191 498 103	VWIU-5021	191 498 103
PASSAT (3A2, 35I)	1.8 ABS	AT/MT	1800	198802	199608	VW-011	357 498 099 X	VWIU-5021	191 498 103	VWIU-5021	191 498 103
PASSAT (3A2, 35I)	1.8 ADZ	AT/MT	1800	198802	199608	VW-011	357 498 099 X	VWIU-5021	191 498 103	VWIU-5021	191 498 103
PASSAT (3A2, 35I)	1.8 Sync PG	AT/MT	1800	198802	199608	VW-011	357 498 099 X	VWIU-5021	191 498 103	VWIU-5021	191 498 103
PASSAT (3A2, 35I)	1.8 PB (KAT)	AT/MT	1800	198802	199608	VW-011	357 498 099 X	VWIU-5021	191 498 103	VWIU-5021	191 498 103
PASSAT (3A2, 35I)	1.8 PF	AT/MT	1800	198802	199608	VW-011	357 498 099 X	VWIU-5021	191 498 103	VWIU-5021	191 498 103
PASSAT (3A2, 35I)	1.8 RP	AT/MT	1800	198802	199608	VW-011	357 498 099 X	VWIU-5021	191 498 103	VWIU-5021	191 498 103
PASSAT (3A2, 35I)	1.9 D 1Y	AT/MT	1900	198802	199608	VW-011	357 498 099 X	VWIU-5021	191 498 103	VWIU-5021	191 498 103
PASSAT (3A2, 35I)	1.9 TD AAZ	AT/MT	1900	198802	199608	VW-011	357 498 099 X	VWIU-5021	191 498 103	VWIU-5021	191 498 103
PASSAT (3A2, 35I)	2.0 16V 9A	AT/MT	2000	198802	199608	VW-011	357 498 099 X	VWIU-5021	191 498 103	VWIU-5021	191 498 103
PASSAT (3A2, 35I)	2.0 2E	AT/MT	2000	198802	199608	VW-011	357 498 099 X	VWIU-5021	191 498 103	VWIU-5021	191 498 103
PASSAT (3A2, 35I)	2.0 ADY	AT/MT	2000	198802	199608	VW-011	357 498 099 X	VWIU-5021	191 498 103	VWIU-5021	191 498 103
PASSAT (3A2, 35I)	2.0 AGG	AT/MT	2000	198802	199608	VW-011	357 498 099 X	VWIU-5021	191 498 103	VWIU-5021	191 498 103
PASSAT (3A2, 35I)	2.0 Sync 2E	AT/MT	2000	198802	199608	VW-011	357 498 099 X	VWIU-5021	191 498 103	VWIU-5021	191 498 103
PASSAT (3A2, 35I)	2.0 Sync ADY	AT/MT	2000	198802	199608	VW-011	357 498 099 X	VWIU-5021	191 498 103	VWIU-5021	191 498 103
PASSAT (3A2, 35I)	2.0 Sync AGG	AT/MT	2000	198802	199608	VW-011	357 498 099 X	VWIU-5021	191 498 103	VWIU-5021	191 498 103
PASSAT (3B2)	1.6 ADP	AT/MT	1600	199608	200011	AD-012A45	8D0 498 099 B				
PASSAT (3B2)	1.6 AHL	AT/MT	1600	199608	200011	AD-012A45	8D0 498 099 B				
PASSAT (3B2)	1.6 ANA	AT/MT	1600	199608	200011	AD-012A45	8D0 498 099 B				
PASSAT (3B2)	1.6 ARM	AT/MT	1600	199608	200011	AD-012A45	8D0 498 099 B				
PASSAT (3B2)	1.8 ADR	AT/MT	1800	199608	200011	AD-012A45	8D0 498 099 B	VW-1014	431 498 103 C	VW-1014	431 498 103 C
PASSAT (3B2)	1.8 AFY	AT/MT	1800	199608	200011	AD-012A45	8D0 498 099 B	VW-1014	431 498 103 C	VW-1014	431 498 103 C
PASSAT (3B2)	1.8 APT	AT/MT	1800	199608	200011	AD-012A45	8D0 498 099 B	VW-1014	431 498 103 C	VW-1014	431 498 103 C
PASSAT (3B2)	1.8 ARG	AT/MT	1800	199608	200011	AD-012A45	8D0 498 099 B	VW-1014	431 498 103 C	VW-1014	431 498 103 C
PASSAT (3B2)	1.8 T AEB	AT/MT	1800	199608	200011	AD-012A45	8D0 498 099 B	VW-1014	431 498 103 C	VW-1014	431 498 103 C
PASSAT (3B2)	1.8 T ANB	AT/MT	1800	199608	200011	AD-012A45	8D0 498 099 B	VW-1014	431 498 103 C	VW-1014	431 498 103 C
PASSAT (3B2)	1.8 T APU	AT/MT	1800	199608	200011	AD-012A45	8D0 498 099 B	VW-1014	431 498 103 C	VW-1014	431 498 103 C
PASSAT (3B2)	1.9 TDI AFN	AT/MT	1900	199608	200011	AD-011A45	4D0 498 099				
PASSAT (3B2)	1.9 TDI AHH	AT/MT	1900	199608	200011	AD-012A45	8D0 498 099 B				
PASSAT (3B2)	1.9 TDI AHU	AT/MT	1900	199608	200011	AD-012A45	8D0 498 099 B				
PASSAT (3B2)	1.9 TDI AVG	AT/MT	1900	199608	200011	AD-011A45	4D0 498 099				
PASSAT (3B2)	2.3 VR5 AGZ	AT/MT	2300	199608	200011	AD-012A45	8D0 498 099 B				
PASSAT (3B2)	2.5TDI Sync AFB	AT/MT	2500	199608	200011	AD-011A45	4D0 498 099				
PASSAT (3B2)	2.5TDI Sync AKN	AT/MT	2500	199608	200011	AD-011A45	4D0 498 099				
PASSAT (3B2)	2.8 V6 ACK	AT/MT	2800	199608	200011	AD-011A45	4D0 498 099				
PASSAT (3B2)	2.8 V6 AGE	AT/MT	2800	199608	200011	AD-011A45	4D0 498 099				
PASSAT (3B2)	2.8 V6 APR	AT/MT	2800	199608	200011	AD-011A45	4D0 498 099				
PASSAT (3B2)	2.8 V6 AQD	AT/MT	2800	199608	200011	AD-011A45	4D0 498 099				
PASSAT VARIANT (32B)	1.3 EP	AT/MT	1300	198008	198906	VW-010	321 498 099 E				

VOLKSWAGEN

MODEL	ENGINE	AT/MT	CC	YEAR	YEAR	OUTER	O.E No.R	INNER R	O.E No.IR	INNER L	O.E No.IL
PASSAT VARIANT (32B)	1.3 EU	AT/MT	1300	198008	198906	VW-010	321 498 099 E				
PASSAT VARIANT (32B)	1.3 FY	AT/MT	1300	198008	198906	VW-010	321 498 099 E				
PASSAT VARIANT (32B)	1.3 FZ	AT/MT	1300	198008	198906	VW-010	321 498 099 E				
PASSAT VARIANT (32B)	1.6 D CR	AT/MT	1600	198008	198906	VW-010	321 498 099 E				
PASSAT VARIANT (32B)	1.6 D JK	AT/MT	1600	198008	198906	VW-010	321 498 099 E				
PASSAT VARIANT (32B)	1.6 DT	AT/MT	1600	198008	198906	VW-010	321 498 099 E				
PASSAT VARIANT (32B)	1.6 PP	AT/MT	1600	198008	198906	VW-010	321 498 099 E				
PASSAT VARIANT (32B)	1.6 RL	AT/MT	1600	198008	198906	VW-010	321 498 099 E				
PASSAT VARIANT (32B)	1.6 TD CY	AT/MT	1600	198008	198906	VW-010	321 498 099 E				
PASSAT VARIANT (32B)	1.6 WV	AT/MT	1600	198008	198906	VW-010	321 498 099 E				
PASSAT VARIANT (32B)	1.6 YN	AT/MT	1600	198008	198906	VW-010	321 498 099 E				
PASSAT VARIANT (32B)	1.6 YP	AT/MT	1600	198008	198906	VW-010	321 498 099 E				
PASSAT VARIANT (32B)	1.8 DS	AT/MT	1800	198008	198906	VW-010	321 498 099 E				
PASSAT VARIANT (32B)	1.8 JN	AT/MT	1800	198008	198906	VW-010	321 498 099 E				
PASSAT VARIANT (32B)	1.8 RM	AT/MT	1800	198008	198906	VW-010	321 498 099 E				
PASSAT VARIANT (32B)	1.8 Sync DS	AT/MT	1800	198008	198906	VW-010	321 498 099 E				
PASSAT VARIANT (32B)	1.8 Sync JN	AT/MT	1800	198008	198906	VW-010	321 498 099 E				
PASSAT VARIANT (32B)	1.9 WN	AT/MT	1900	198008	198906	VW-010	321 498 099 E	VWIU-5021	191 498 103	VWIU-5021	191 498 103
PASSAT VARIANT (32B)	2.0 HP	AT/MT	2000	198008	198906	VW-010	321 498 099 E	VWIU-5021	191 498 103	VWIU-5021	191 498 103
PASSAT VARIANT (32B)	2.0 JS	AT/MT	2000	198008	198906	VW-010	321 498 099 E	VWIU-5021	191 498 103	VWIU-5021	191 498 103
PASSAT VARIANT (32B)	2.0 Sync JS	AT/MT	2000	198008	198906	VW-010	321 498 099 E				
PASSAT VARIANT (32B)	2.2 Sync JT	AT/MT	2200	198008	198906	VW-010	321 498 099 E	VW-1014	431 498 103 C	VW-1014	431 498 103 C
PASSAT VARIANT (3A5, 35I)	1.6 TD RA	AT/MT	1600	198802	199705	VW-011	357 498 099 X	VWIU-5021	191 498 103	VWIU-5021	191 498 103
PASSAT VARIANT (3A5, 35I)	1.6 TD SB	AT/MT	1600	198802	199705	VW-011	357 498 099 X	VWIU-5021	191 498 103	VWIU-5021	191 498 103
PASSAT VARIANT (3A5, 35I)	1.8 16V KR	AT/MT	1800	198802	199705	VW-011	357 498 099 X	VWIU-5021	191 498 103	VWIU-5021	191 498 103
PASSAT VARIANT (3A5, 35I)	1.8 AAM	AT/MT	1800	198802	199705	VW-011	357 498 099 X	VWIU-5021	191 498 103	VWIU-5021	191 498 103
PASSAT VARIANT (3A5, 35I)	1.8 ABS	AT/MT	1800	198802	199705	VW-011	357 498 099 X	VWIU-5021	191 498 103	VWIU-5021	191 498 103
PASSAT VARIANT (3A5, 35I)	1.8 ADZ	AT/MT	1800	198802	199705	VW-011	357 498 099 X	VWIU-5021	191 498 103	VWIU-5021	191 498 103
PASSAT VARIANT (3A5, 35I)	1.8 Sync PG	AT/MT	1800	198802	199705	VW-011	357 498 099 X	VWIU-5021	191 498 103	VWIU-5021	191 498 103
PASSAT VARIANT (3A5, 35I)	1.8 PB (KAT)	AT/MT	1800	198802	199705	VW-011	357 498 099 X	VWIU-5021	191 498 103	VWIU-5021	191 498 103
PASSAT VARIANT (3A5, 35I)	1.8 PF	AT/MT	1800	198802	199705	VW-011	357 498 099 X	VWIU-5021	191 498 103	VWIU-5021	191 498 103
PASSAT VARIANT (3A5, 35I)	1.8 RP	AT/MT	1800	198802	199705	VW-011	357 498 099 X	VWIU-5021	191 498 103	VWIU-5021	191 498 103
PASSAT VARIANT (3A5, 35I)	1.9 D 1Y	AT/MT	1900	198802	199705	VW-011	357 498 099 X	VWIU-5021	191 498 103	VWIU-5021	191 498 103
PASSAT VARIANT (3A5, 35I)	1.9 TD AAZ	AT/MT	1900	198802	199705	VW-011	357 498 099 X	VWIU-5021	191 498 103	VWIU-5021	191 498 103
PASSAT VARIANT (3A5, 35I)	2.0 16V 9A	AT/MT	2000	198802	199705	VW-011	357 498 099 X	VWIU-5021	191 498 103	VWIU-5021	191 498 103
PASSAT VARIANT (3A5, 35I)	2.0 2E	AT/MT	2000	198802	199705	VW-011	357 498 099 X	VWIU-5021	191 498 103	VWIU-5021	191 498 103
PASSAT VARIANT (3A5, 35I)	2.0 ADY	AT/MT	2000	198802	199705	VW-011	357 498 099 X	VWIU-5021	191 498 103	VWIU-5021	191 498 103
PASSAT VARIANT (3A5, 35I)	2.0 AGG	AT/MT	2000	198802	199705	VW-011	357 498 099 X	VWIU-5021	191 498 103	VWIU-5021	191 498 103
PASSAT VARIANT (3A5, 35I)	2.0 Sync 2E	AT/MT	2000	198802	199705	VW-011	357 498 099 X	VWIU-5021	191 498 103	VWIU-5021	191 498 103
PASSAT VARIANT (3A5, 35I)	2.0 Sync ADY	AT/MT	2000	198802	199705	VW-011	357 498 099 X	VWIU-5021	191 498 103	VWIU-5021	191 498 103
PASSAT VARIANT (3A5, 35I)	2.0 Sync AGG	AT/MT	2000	198802	199705	VW-011	357 498 099 X	VWIU-5021	191 498 103	VWIU-5021	191 498 103
PASSAT VARIANT (3B5)	1.6 ADP	AT/MT	1600	199706	200011	AD-012A45	8D0 498 099 B				
PASSAT VARIANT (3B5)	1.6 AHL	AT/MT	1600	199706	200011	AD-012A45	8D0 498 099 B				
PASSAT VARIANT (3B5)	1.6 ANA	AT/MT	1600	199706	200011	AD-012A45	8D0 498 099 B				
PASSAT VARIANT (3B5)	1.6 ARM	AT/MT	1600	199706	200011	AD-012A45	8D0 498 099 B				
PASSAT VARIANT (3B5)	1.8 ADR	AT/MT	1800	199706	200011	AD-012A45	8D0 498 099 B	VW-1014	431 498 103 C	VW-1014	431 498 103 C
PASSAT VARIANT (3B5)	1.8 AFY	AT/MT	1800	199706	200011	AD-012A45	8D0 498 099 B	VW-1014	431 498 103 C	VW-1014	431 498 103 C
PASSAT VARIANT (3B5)	1.8 APT	AT/MT	1800	199706	200011	AD-012A45	8D0 498 099 B	VW-1014	431 498 103 C	VW-1014	431 498 103 C
PASSAT VARIANT (3B5)	1.8 ARG	AT/MT	1800	199706	200011	AD-012A45	8D0 498 099 B	VW-1014	431 498 103 C	VW-1014	431 498 103 C
PASSAT VARIANT (3B5)	1.8 T AEB	AT/MT	1800	199706	200011	AD-012A45	8D0 498 099 B	VW-1014	431 498 103 C	VW-1014	431 498 103 C
PASSAT VARIANT (3B5)	1.8 T ANB	AT/MT	1800	199706	200011	AD-012A45	8D0 498 099 B	VW-1014	431 498 103 C	VW-1014	431 498 103 C
PASSAT VARIANT (3B5)	1.8 T APU	AT/MT	1800	199706	200011	AD-012A45	8D0 498 099 B	VW-1014	431 498 103 C	VW-1014	431 498 103 C
PASSAT VARIANT (3B5)	1.9 TDI AFN	AT/MT	1900	199706	200011	AD-011A45	4D0 498 099				
PASSAT VARIANT (3B5)	1.9 TDI AHH	AT/MT	1900	199706	200011	AD-012A45	8D0 498 099 B				
PASSAT VARIANT (3B5)	1.9 TDI AHU	AT/MT	1900	199706	200011	AD-012A45	8D0 498 099 B				
PASSAT VARIANT (3B5)	1.9 TDI AVG	AT/MT	1900	199706	200011	AD-011A45	4D0 498 099				
PASSAT VARIANT (3B5)	2.3 VR5 AGZ	AT/MT	2300	199706	200011	AD-012A45	8D0 498 099 B				
PASSAT VARIANT (3B5)	2.8 V6 ACK	AT/MT	2800	199706	200011	AD-011A45	4D0 498 099				
PASSAT VARIANT (3B5)	2.8 V6 AGE	AT/MT	2800	199706	200011	AD-011A45	4D0 498 099				
PASSAT VARIANT (3B5)	2.8 V6 APR	AT/MT	2800	199706	200011	AD-011A45	4D0 498 099				
PASSAT VARIANT (3B5)	2.8 V6 AQD	AT/MT	2800	199706	200011	AD-011A45	4D0 498 099				
PASSAT (3C2)	CAXA	6MT	1400	200705		VW-B61	1K0 498 099		3C0 498 103 C		3C0 498 103 C
PASSAT (3C2)	BSE	5MT	1600	200508		VW-B61	1K0 498 099	VWIU-5021	1K0 498 103	VWIU-5021	1K0 498 103
PASSAT (3C2)	BSF	5MT	1600	200508		VW-B61	1K0 498 099	VWIU-5021	1K0 498 103	VWIU-5021	1K0 498 103
PASSAT (3C2)	BLF	6MT	1600	200508		VW-B61	1K0 498 099		3C0 498 103 C		3C0 498 103 C
PASSAT (3C2)	BLF	6AT	1600	200508		VW-B61	1K0 498 099		1K0 498 103 C		1K0 498 103 C
PASSAT (3C2)	BKC	5MT	1900	200508		VW-B61	1K0 498 099	VWIU-5021	1K0 498 103	VWIU-5021	1K0 498 103
PASSAT (3C2)	BLS	5MT	1900	200508		VW-B61	1K0 498 099	VWIU-5021	1K0 498 103	VWIU-5021	1K0 498 103
PASSAT (3C2)	BXE	5MT	1900	200508		VW-B61	1K0 498 099	VWIU-5021	1K0 498 103	VWIU-5021	1K0 498 103
PASSAT (3C2)	BLR	6MT	2000	200508		VW-B61	1K0 498 099	VWIU-5021	1K0 498 103	VWIU-5021	1K0 498 103
PASSAT (3C2)	BLY	6MT	2000	200508		VW-B61	1K0 498 099	VWIU-5021	1K0 498 103	VWIU-5021	1K0 498 103
PASSAT (3C2)	BVY	6MT	2000	200508		VW-B61	1K0 498 099	VWIU-5021	1K0 498 103	VWIU-5021	1K0 498 103
PASSAT (3C2)	BVZ	6MT	2000	200508		VW-B61	1K0 498 099	VWIU-5021	1K0 498 103	VWIU-5021	1K0 498 103
PASSAT (3C2)	BLR	6AT	2000	200508		VW-B61	1K0 498 099		1K0 498 103 C		1K0 498 103 C
PASSAT (3C2)	BLY	6AT	2000	200508		VW-B61	1K0 498 099		1K0 498 103 C		1K0 498 103 C
PASSAT (3C2)	BVY	6AT	2000	200508		VW-B61	1K0 498 099		1K0 498 103 C		1K0 498 103 C
PASSAT (3C2)	BVZ	6AT	2000	200508		VW-B61	1K0 498 099		1K0 498 103 C		1K0 498 103 C
PASSAT (3C2)	AXX	6MT	2000	200508		VW-B62	1K0 498 099 B	VWIU-B6M1	1K0 498 103 A	VWIU-B6M1	1K0 498 103 A
PASSAT (3C2)	BPY	6MT	2000	200508		VW-B62	1K0 498 099 B	VWIU-B6M1	1K0 498 103 A	VWIU-B6M1	1K0 498 103 A
PASSAT (3C2)	BWA	6MT	2000	200508		VW-B62	1K0 498 099 B	VWIU-B6M1	1K0 498 103 A	VWIU-B6M1	1K0 498 103 A
PASSAT (3C2)	BVE	6MT	2000	200508		VW-B62	1K0 498 099 B	VWIU-B6M1	1K0 498 103 A	VWIU-B6M1	1K0 498 103 A
PASSAT (3C2)	BWV	6MT	2000	200508		VW-B62	1K0 498 099 B	VWIU-B6M1	1K0 498 103 A	VWIU-B6M1	1K0 498 103 A
PASSAT (3C2)	BKP	6MT	2000	200508		VW-B62	1K0 498 099 B	VWIU-B6M1	1K0 498 103 A	VWIU-B6M1	1K0 498 103 A
PASSAT (3C2)	BMA	6MT	2000	200508		VW-B62	1K0 498 099 B	VWIU-B6M1	1K0 498 103 A	VWIU-B6M1	1K0 498 103 A
PASSAT (3C2)	BMP	6MT	2000	200508		VW-B62	1K0 498 099 B	VWIU-B6M1	1K0 498 103 A	VWIU-B6M1	1K0 498 103 A
PASSAT (3C2)	AXX	6AT	2000	200508		VW-B62	1K0 498 099 B		3C0 498 103 A		3C0 498 103 A
PASSAT (3C2)	BPY	6AT	2000	200508		VW-B62	1K0 498 099 B		3C0 498 103 A		3C0 498 103 A
PASSAT (3C2)	BWA	6AT	2000	200508		VW-B62	1K0 498 099 B		3C0 498 103 A		3C0 498 103 A
PASSAT (3C2)	BVE	6AT	2000	200508		VW-B62	1K0 498 099 B	VWIU-B6A1	1K0 498 103 E	VWIU-B6A1	1K0 498 103 E
PASSAT (3C2)	BWV	6AT	2000	200508		VW-B62	1K0 498 099 B	VWIU-B6A1	1K0 498 103 E	VWIU-B6A1	1K0 498 103 E

VOLKSWAGEN

MODEL	ENGINE	AT/MT	CC	YEAR	YEAR	OUTER	O.E No.R	INNER R	O.E No.IR	INNER L	O.E No.IL
PASSAT (3C2)	BKP	6AT	2000	200508		VW-B62	1K0 498 099 B	VWIU-B6A1	1K0 498 103 E	VWIU-B6A1	1K0 498 103 E
PASSAT (3C2)	BMA	6AT	2000	200508		VW-B62	1K0 498 099 B	VWIU-B6A1	1K0 498 103 E	VWIU-B6A1	1K0 498 103 E
PASSAT (3C2)	BMP	6AT	2000	200508		VW-B62	1K0 498 099 B	VWIU-B6A1	1K0 498 103 E	VWIU-B6A1	1K0 498 103 E
PASSAT (3C2) 4Motion	BLX	6MT	2000	200508		VW-B61	1K0 498 099	VWIU-5021	1K0 498 103	VWIU-5021	1K0 498 103
PASSAT (3C2) 4Motion	BLX	6MT	2000	200508		VW-B61	1K0 498 099	VWIU-5021	1K0 498 103	VWIU-5021	1K0 498 103
PASSAT (3C2) 4Motion	BKP	6MT	2000	200508		VW-B62	1K0 498 099 B	VWIU-B6M1	1K0 498 103 A	VWIU-B6M1	1K0 498 103 A
PASSAT (3C2) 4Motion	BKP	6MT	2000	200508		VW-B62	1K0 498 099 B	VWIU-B6M1	1K0 498 103 A	VWIU-B6M1	1K0 498 103 A
PASSAT (3C2) 4Motion	AXZ	6AT	3200	200508		VW-B62	1K0 498 099 B	VWIU-B6A1	1K0 498 103 E	VWIU-B6A1	1K0 498 103 E
PASSAT VARIANT (3C5)	CAXA	6MT	1400	200705		VW-B61	1K0 498 099		3C0 498 103 C		3C0 498 103 C
PASSAT VARIANT (3C5)	BSE	5MT	1600	200508		VW-B61	1K0 498 099	VWIU-5021	1K0 498 103	VWIU-5021	1K0 498 103
PASSAT VARIANT (3C5)	BSF	5MT	1600	200508		VW-B61	1K0 498 099	VWIU-5021	1K0 498 103	VWIU-5021	1K0 498 103
PASSAT VARIANT (3C5)	BLF	6MT	1600	200508		VW-B61	1K0 498 099		3C0 498 103 C		3C0 498 103 C
PASSAT VARIANT (3C5)	BLF	6AT	1600	200508		VW-B61	1K0 498 099		1K0 498 103 C		1K0 498 103 C
PASSAT VARIANT (3C5)	BKC	5MT	1900	200508		VW-B61	1K0 498 099	VWIU-5021	1K0 498 103	VWIU-5021	1K0 498 103
PASSAT VARIANT (3C5)	BLS	5MT	1900	200508		VW-B61	1K0 498 099	VWIU-5021	1K0 498 103	VWIU-5021	1K0 498 103
PASSAT VARIANT (3C5)	BXE	5MT	1900	200508		VW-B61	1K0 498 099	VWIU-5021	1K0 498 103	VWIU-5021	1K0 498 103
PASSAT VARIANT (3C5)	BLR	6MT	2000	200508		VW-B61	1K0 498 099	VWIU-5021	1K0 498 103	VWIU-5021	1K0 498 103
PASSAT VARIANT (3C5)	BLY	6MT	2000	200508		VW-B61	1K0 498 099	VWIU-5021	1K0 498 103	VWIU-5021	1K0 498 103
PASSAT VARIANT (3C5)	BVY	6MT	2000	200508		VW-B61	1K0 498 099	VWIU-5021	1K0 498 103	VWIU-5021	1K0 498 103
PASSAT VARIANT (3C5)	BVZ	6MT	2000	200508		VW-B61	1K0 498 099	VWIU-5021	1K0 498 103	VWIU-5021	1K0 498 103
PASSAT VARIANT (3C5)	BLR	6AT	2000	200508		VW-B61	1K0 498 099		1K0 498 103 C		1K0 498 103 C
PASSAT VARIANT (3C5)	BLY	6AT	2000	200508		VW-B61	1K0 498 099		1K0 498 103 C		1K0 498 103 C
PASSAT VARIANT (3C5)	BVY	6AT	2000	200508		VW-B61	1K0 498 099		1K0 498 103 C		1K0 498 103 C
PASSAT VARIANT (3C5)	BVZ	6AT	2000	200508		VW-B61	1K0 498 099		1K0 498 103 C		1K0 498 103 C
PASSAT VARIANT (3C5)	AXX	6MT	2000	200508		VW-B62	1K0 498 099 B	VWIU-B6M1	1K0 498 103 A	VWIU-B6M1	1K0 498 103 A
PASSAT VARIANT (3C5)	BPY	6MT	2000	200508		VW-B62	1K0 498 099 B	VWIU-B6M1	1K0 498 103 A	VWIU-B6M1	1K0 498 103 A
PASSAT VARIANT (3C5)	BWA	6MT	2000	200508		VW-B62	1K0 498 099 B	VWIU-B6M1	1K0 498 103 A	VWIU-B6M1	1K0 498 103 A
PASSAT VARIANT (3C5)	BVE	6MT	2000	200508		VW-B62	1K0 498 099 B	VWIU-B6M1	1K0 498 103 A	VWIU-B6M1	1K0 498 103 A
PASSAT VARIANT (3C5)	BWV	6MT	2000	200508		VW-B62	1K0 498 099 B	VWIU-B6M1	1K0 498 103 A	VWIU-B6M1	1K0 498 103 A
PASSAT VARIANT (3C5)	BKP	6MT	2000	200508		VW-B62	1K0 498 099 B	VWIU-B6M1	1K0 498 103 A	VWIU-B6M1	1K0 498 103 A
PASSAT VARIANT (3C5)	BMA	6MT	2000	200508		VW-B62	1K0 498 099 B	VWIU-B6M1	1K0 498 103 A	VWIU-B6M1	1K0 498 103 A
PASSAT VARIANT (3C5)	BMP	6MT	2000	200508		VW-B62	1K0 498 099 B	VWIU-B6M1	1K0 498 103 A	VWIU-B6M1	1K0 498 103 A
PASSAT VARIANT (3C5)	AXX	6AT	2000	200508		VW-B62	1K0 498 099 B		3C0 498 103 A		3C0 498 103 A
PASSAT VARIANT (3C5)	BPY	6AT	2000	200508		VW-B62	1K0 498 099 B		3C0 498 103 A		3C0 498 103 A
PASSAT VARIANT (3C5)	BWA	6AT	2000	200508		VW-B62	1K0 498 099 B		3C0 498 103 A		3C0 498 103 A
PASSAT VARIANT (3C5)	BVE	6AT	2000	200508		VW-B62	1K0 498 099 B	VWIU-B6A1	1K0 498 103 E	VWIU-B6A1	1K0 498 103 E
PASSAT VARIANT (3C5)	BWV	6AT	2000	200508		VW-B62	1K0 498 099 B	VWIU-B6A1	1K0 498 103 E	VWIU-B6A1	1K0 498 103 E
PASSAT VARIANT (3C5)	BKP	6AT	2000	200508		VW-B62	1K0 498 099 B	VWIU-B6A1	1K0 498 103 E	VWIU-B6A1	1K0 498 103 E
PASSAT VARIANT (3C5)	BMA	6AT	2000	200508		VW-B62	1K0 498 099 B	VWIU-B6A1	1K0 498 103 E	VWIU-B6A1	1K0 498 103 E
PASSAT VARIANT (3C5)	BMP	6AT	2000	200508		VW-B62	1K0 498 099 B	VWIU-B6A1	1K0 498 103 E	VWIU-B6A1	1K0 498 103 E
PASSAT VARIANT (3C5) 4Motion	BVX	6MT	2000	200508		VW-B61	1K0 498 099	VWIU-5021	1K0 498 103	VWIU-5021	1K0 498 103
PASSAT VARIANT (3C5) 4Motion	BVX	6MT	2000	200508		VW-B61	1K0 498 099	VWIU-5021	1K0 498 103	VWIU-5021	1K0 498 103
PASSAT VARIANT (3C5) 4Motion	BMP	6MT	2000	200508		VW-B62	1K0 498 099 B	VWIU-B6M1	1K0 498 103 A	VWIU-B6M1	1K0 498 103 A
PASSAT VARIANT (3C5) 4Motion	BMP	6MT	2000	200508		VW-B62	1K0 498 099 B	VWIU-B6M1	1K0 498 103 A	VWIU-B6M1	1K0 498 103 A
PASSAT VARIANT (3C5) 4Motion	AXZ	6AT	3200	200508		VW-B62	1K0 498 099 B	VWIU-B6A1	1K0 498 103 E	VWIU-B6A1	1K0 498 103 E
PHAETON											
3D3, 3D4, 3D6, 3D7	CARA	6AT	3000	200706	200805	AD-A64F1	4E0 498 099 A		3D0 498 103		3D0 498 103
3D3, 3D4, 3D6, 3D7 4Motion	BMK	6AT	3000	200405	200705	AD-A64F1	4E0 498 099 A		3D0 498 103		3D0 498 103
3D3, 3D4, 3D6, 3D7	BKL	6AT	3200	200308	200810	AD-A64F1	4E0 498 099 A		3D0 498 103		3D0 498 103
3D3, 3D4, 3D6, 3D7	BRK	6AT	3200	200405	200810	AD-A64F1	4E0 498 099 A		3D0 498 103		3D0 498 103
3D3 >>3D-3-004 100	AYT	6MT	3200	200505	200505		3D0 498 099		3D0 498 103 A		3D0 498 103 A
3D3, 3D4>>3D-3-004 100 >>3D-4-009-580	AYT	6MT	3200	200505	200505		3D0 498 099		3D0 498 103 A		3D0 498 103 A
3D4, 3D6, 3D7 3D-4-009 581>>	AYT	6MT	3200	200505	200505		3D0 498 099 A		3D0 498 103 A		3D0 498 103 A
3D4, 3D6, 3D7 3D-4-009 581>>	BKL	6MT	3200	200308	200810		3D0 498 099 A		3D0 498 103 B		3D0 498 103 B
3D3 >>3D-3-004 100	AYT	5AT	3200	200505	200505		3D0 498 099		3D0 498 103 B		3D0 498 103 B
3D3, 3D4>>3D-3-004 100 >>3D-4-009-580	AYT	5AT	3200	200505	200505		3D0 498 099		3D0 498 103 B		3D0 498 103 B
3D4, 3D6, 3D73D-4-009 581>>	AYT	5AT	3200	200505	200505		3D0 498 099 A		3D0 498 103 A		3D0 498 103 A
3D4, 3D6, 3D73D-4-009 581>>	BKL	5AT	3200	200308	200810		3D0 498 099 A		3D0 498 103 B		3D0 498 103 B
3D3, 3D4, 3D6, 3D7 4Motion	BKL	6AT	3200	200308	200810	AD-A64F1	4E0 498 099 A		3D0 498 103 B		3D0 498 103 B
3D3, 3D4, 3D6, 3D7 4Motion	BRK	6AT	3200	200405	200810	AD-A64F1	4E0 498 099 A		3D0 498 103 B		3D0 498 103 B
3D3, 3D4, 3D6, 3D7	BGH	6AT	4200	200308		AD-A64F1	4E0 498 099 A		3D0 498 103 A		3D0 498 103 A
3D3, 3D4, 3D6, 3D7 4Motion	BGH	6AT	4200	200308		AD-A64F1	4E0 498 099 A		3D0 498 103 A		3D0 498 103 A
3D3, 3D4, 3D6, 3D7 4Motion	BGJ	6AT	4200	200305	200307	AD-A64F1	4E0 498 099 A		3D0 498 103 A		3D0 498 103 A
3D3, 3D4, 3D6, 3D7 4Motion	AJS	6AT	4900	200212	200610		3D0 498 099 A		3D0 498 103		3D0 498 103
3D3, 3D4, 3D6, 3D7	BRN	5AT	6000	200505			3D0 498 099		3D0 498 103		3D0 498 103
3D3, 3D4, 3D6, 3D7	BTT	5AT	6000	200505			3D0 498 099		3D0 498 103		3D0 498 103
3D3, 3D4, 3D6, 3D7 4Motion	BAN	5AT	6000	200205	200505		3D0 498 099		3D0 498 103		3D0 498 103
3D3, 3D4, 3D6, 3D7 4Motion	BRN	5AT	6000	200505			3D0 498 099		3D0 498 103		3D0 498 103
3D3, 3D4, 3D6, 3D7 4Motion	BTT	5AT	6000	200505			3D0 498 099		3D0 498 103 A		3D0 498 103 A
POLO											
POLO (6KV2)	1,6 1F	AT/MT	1600	199511	200109	VW-011	1H0 498 099	VWIU-5021	191 498 103	VWIU-5021	191 498 103
POLO (6KV2)	1.6 AEE	AT/MT	1600	199511	200109	VW-011	1H0 498 099	VWIU-5021	191 498 103	VWIU-5021	191 498 103
POLO (6KV2)	1.6 AEH	AT/MT	1600	199511	200109	VW-011	1H0 498 099	VWIU-5021	191 498 103	VWIU-5021	191 498 103
POLO (6KV2)	1.6 AFT	AT/MT	1600	199511	200109	VW-011	1H0 498 099	VWIU-5021	191 498 103	VWIU-5021	191 498 103
POLO (6KV2)	1.6 AKL	AT/MT	1600	199511	200109	VW-011	1H0 498 099	VWIU-5021	191 498 103	VWIU-5021	191 498 103
POLO (6KV2)	1.6 ALM	AT/MT	1600	199511	200109	VW-011	1H0 498 099	VWIU-5021	191 498 103	VWIU-5021	191 498 103
POLO (6KV2)	1.6 APF	AT/MT	1600	199511	200109	VW-011	1H0 498 099	VWIU-5021	191 498 103	VWIU-5021	191 498 103
POLO (6KV2)	1.6 AUR	AT/MT	1600	199511	200109	VW-011	1H0 498 099	VWIU-5021	191 498 103	VWIU-5021	191 498 103
POLO (6KV2)	1.9 TDI AGR	AT/MT	1900	199511	200109	VW-011	1H0 498 099	VWIU-5021	191 498 103	VWIU-5021	191 498 103
POLO (6KV2)	1.9 TDI AHU	AT/MT	1900	199511	200109	VW-011	1H0 498 099	VWIU-5021	191 498 103	VWIU-5021	191 498 103
POLO (6KV2)	1.9 TDI ALE	AT/MT	1900	199511	200109	VW-011	1H0 498 099	VWIU-5021	191 498 103	VWIU-5021	191 498 103
POLO (6KV2)	1.9 TDI ALH	AT/MT	1900	199511	200109	VW-011	1H0 498 099	VWIU-5021	191 498 103	VWIU-5021	191 498 103
POLO VARIANT (6KV5)	1.6 AEE	AT/MT	1600	199704	200109	VW-011	1H0 498 099	VWIU-5021	191 498 103	VWIU-5021	191 498 103
POLO VARIANT (6KV5)	1.6 AEH	AT/MT	1600	199704	200109	VW-011	1H0 498 099	VWIU-5021	191 498 103	VWIU-5021	191 498 103
POLO VARIANT (6KV5)	1.6 AFT	AT/MT	1600	199704	200109	VW-011	1H0 498 099	VWIU-5021	191 498 103	VWIU-5021	191 498 103
POLO VARIANT (6KV5)	1.6 AKL	AT/MT	1600	199704	200109	VW-011	1H0 498 099	VWIU-5021	191 498 103	VWIU-5021	191 498 103
POLO VARIANT (6KV5)	1.6 ALM	AT/MT	1600	199704	200109	VW-011	1H0 498 099	VWIU-5021	191 498 103	VWIU-5021	191 498 103
POLO VARIANT (6KV5)	1.6 APF	AT/MT	1600	199704	200109	VW-011	1H0 498 099	VWIU-5021	191 498 103	VWIU-5021	191 498 103

VOLKSWAGEN

MODEL	ENGINE	AT/MT	CC	YEAR	YEAR	OUTER	O.E No.R	INNER R	O.E No.IR	INNER L	O.E No.IL
POLO VARIANT (6KV5)	1.6 AUR	AT/MT	1600	199704	200109	VW-011	1H0 498 099	VWIU-5021	191 498 103	VWIU-5021	191 498 103
POLO VARIANT (6KV5)	1.9 TDI AGR	AT/MT	1900	199704	200109	VW-011	1H0 498 099	VWIU-5021	191 498 103	VWIU-5021	191 498 103
POLO VARIANT (6KV5)	1.9 TDI AHU	AT/MT	1900	199704	200109	VW-011	1H0 498 099	VWIU-5021	191 498 103	VWIU-5021	191 498 103
POLO VARIANT (6KV5)	1.9 TDI ALE	AT/MT	1900	199704	200109	VW-011	1H0 498 099	VWIU-5021	191 498 103	VWIU-5021	191 498 103
POLO VARIANT (6KV5)	1.9 TDI ALH	AT/MT	1900	199704	200109	VW-011	1H0 498 099	VWIU-5021	191 498 103	VWIU-5021	191 498 103
Polo V (9N)	1.2		1200	200106		SK-1413	6Q0 498 099D				
Polo V (9N)	1.2 12v		1200	200106		SK-1413	6Q0 498 099D				
Polo V (9N)	1.4 16v		1400	200106		SK-1413	6Q0 498 099D				
Polo V (9N)	1.4 FSI		1400	200106		SK-1413	6Q0 498 099D				
Polo V (9N)	1.9 SDI		1900	200106		SK-1413	6Q0 498 099D				
Polo V (9N)	1.4 TDI		1400	200106		SK-1414	6Q0 498 099E	VWIU-G41	1J0 498 103 K	VWIU-G41	1J0 498 103 K
Polo V (9N)	1.6		1600	200106		SK-1414	6Q0 498 099E	VWIU-G41	1J0 498 103 K	VWIU-G41	1J0 498 103 K
Polo V (9N)	1.8 GTI		1800	200106		SK-1414	6Q0 498 099E	VWIU-G41	1J0 498 103 K	VWIU-G41	1J0 498 103 K
Polo V (9N)	1.9 TDI		1900	200106		SK-1414	6Q0 498 099E	VWIU-G41	1J0 498 103 K	VWIU-G41	1J0 498 103 K
SANTANA											
SANTANA (32B)	1.6 DT	AT/MT	1600	198108	198412	VW-010	321 498 099 E				
SANTANA (32B)	1.6 WV	AT/MT	1600	198108	198412	VW-010	321 498 099 E				
SANTANA (32B)	1.6 YP	AT/MT	1600	198108	198412	VW-010	321 498 099 E				
SANTANA (32B)	1.8 DS	AT/MT	1800	198108	198412	VW-010	321 498 099 E				
SANTANA (32B)	1.9 WN	AT/MT	1900	198108	198412	VW-010	321 498 099 E				
SCIROCCO											
SCIROCCO (53B)	1.8 16V KR	AT/MT	1800	198008	199207	VW-011	1H0 498 099	VWIU-5021	191 498 103	VWIU-5021	191 498 103
SCIROCCO (53B)	1.8 16V PL	AT/MT	1800	198008	199207	VW-011	1H0 498 099	VWIU-5021	191 498 103	VWIU-5021	191 498 103
SCIROCCO (53B)	1.8 DX	AT/MT	1800	198008	199207	VW-011	1H0 498 099	VWIU-5021	191 498 103	VWIU-5021	191 498 103
SCIROCCO (53B)	1.8 EV	AT/MT	1800	198008	199207	VW-011	1H0 498 099	VWIU-5021	191 498 103	VWIU-5021	191 498 103
SCIROCCO (53B)	1.8 EX	AT/MT	1800	198008	199207	VW-011	1H0 498 099	VWIU-5021	191 498 103	VWIU-5021	191 498 103
SCIROCCO (53B)	1.8 JH	AT/MT	1800	198008	199207	VW-011	1H0 498 099	VWIU-5021	191 498 103	VWIU-5021	191 498 103
SCIROCCO (53B)	1.8 PB	AT/MT	1800	198008	199207	VW-011	1H0 498 099	VWIU-5021	191 498 103	VWIU-5021	191 498 103
SHARAN											
SHARAN (7M8, 7M9)	1.8 T 20V AJH	AT/MT	1800	199505		FD-075A48	7M0 498 099 X				
SHARAN (7M8, 7M9)	1.8 T 20V AWC	AT/MT	1800	199505		FD-075A48	7M0 498 099 X				
SHARAN (7M8, 7M9)	1.9 TDI AFN	AT/MT	1900	199505		FD-075A48	7M0 498 099 X				
SHARAN (7M8, 7M9)	1.9 TDI AVG	AT/MT	1900	199505		FD-075A48	7M0 498 099 X				
SHARAN (7M8, 7M9)	2.0 ADY	AT/MT	2000	199505		FD-075A48	7M0 498 099 X				
SHARAN (7M8, 7M9)	2.0 ATM	AT/MT	2000	199505		FD-075A48	7M0 498 099 X				
TOUAREG											
2.5 R5 TDI	BAC	AT/MT	2500	200210			7L6 498 099	VWIU-TG	7L0 498 103 A	VWIU-TG	7L0 498 103 A
2.5 R5 TDI	BPE	AT/MT	2500	200210			7L6 498 099	VWIU-TG	7L0 498 103 A	VWIU-TG	7L0 498 103 A
3.0 V6 TDI	BKS	AT/MT	3000	200411		VW-TG	7L0 498 099 C	VWIU-TG	7L0 498 103 A	VWIU-TG	7L0 498 103 A
3.2 V6	AZZ	AT/MT	3200	200210	200611	VW-TG	7L0 498 099 C	VWIU-TG	7L0 498 103 A	VWIU-TG	7L0 498 103 A
3.2 V6	BKJ	AT/MT	3200	200210	200611	VW-TG	7L0 498 099 C	VWIU-TG	7L0 498 103 A	VWIU-TG	7L0 498 103 A
3.2 V6	BMX	AT/MT	3200	200411	200611	VW-TG	7L0 498 099 C	VWIU-TG	7L0 498 103 A	VWIU-TG	7L0 498 103 A
3.6 V6 FSI	BHK	AT/MT	3600	200210		VW-TG	7L0 498 099 C	VWIU-TG	7L0 498 103 A	VWIU-TG	7L0 498 103 A
3.6 V6 FSI	BHL	AT/MT	3600	200210		VW-TG	7L0 498 099 C	VWIU-TG	7L0 498 103 A	VWIU-TG	7L0 498 103 A
TOURAN											
1T2	BMY	6MT	1400	200602	200805	VW-B61	1K0 498 099	VWIU-5021	1K0 498 103	VWIU-5021	1K0 498 103
1T2	BLG	6MT	1400	200611	200805	VW-B62	1K0 498 099 B	VWIU-B6M1	1K0 498 103 A	VWIU-B6M1	1K0 498 103 A
1T2	BLG	6AT	1400	200611	200805	VW-B62	1K0 498 099 B	VWIU-B6M1	1K0 498 103 A	VWIU-B6M1	1K0 498 103 A
1T2	BMY	6AT	1400	200602	200805	VW-B62	1K0 498 099 B	VWIU-B6M1	1K0 498 103 A	VWIU-B6M1	1K0 498 103 A
1T2	BSE	5MT	1600	200506	200805	VW-B61	1K0 498 099	VWIU-5021	1K0 498 103	VWIU-5021	1K0 498 103
1T2	BSF	5MT	1600	200506	200805	VW-B61	1K0 498 099	VWIU-5021	1K0 498 103	VWIU-5021	1K0 498 103
1T2	BLF	6MT	1600	200502	200701	VW-B61	1K0 498 099	VWIU-5021	1K0 498 103	VWIU-5021	1K0 498 103
1T2	BLF	6AT	1600	200502	200701	VW-B61	1K0 498 099		1K0 498 103 C		1K0 498 103 C
1T2	BXE	6MT	1900	200602	200805	VW-B61	1K0 498 099	VWIU-5021	1K0 498 103	VWIU-5021	1K0 498 103
1T2	BXF	6MT	1900	200602	200805	VW-B61	1K0 498 099	VWIU-5021	1K0 498 103	VWIU-5021	1K0 498 103
1T2	BXJ	6MT	1900	200606	200805	VW-B61	1K0 498 099	VWIU-5021	1K0 498 103	VWIU-5021	1K0 498 103
1T2	BLS	6MT	1900	200611	200805	VW-B61	1K0 498 099	VWIU-5021	1K0 498 103	VWIU-5021	1K0 498 103
1T2	BLS	6MT	1900	200611	200805	VW-B62	1K0 498 099 B	VWIU-B6M1	1K0 498 103 A	VWIU-B6M1	1K0 498 103 A
1T2	BLS	6AT	1900	200611	200805	VW-B62	1K0 498 099 B	VWIU-B6A1	1K0 498 103 E	VWIU-B6A1	1K0 498 103 E
1T2	BSX	5MT	2000	200602	200805	VW-B61	1K0 498 099	VWIU-5021	1K0 498 103	VWIU-5021	1K0 498 103
1T2	BVY	6MT	2000	200511	200701	VW-B61	1K0 498 099	VWIU-5021	1K0 498 103	VWIU-5021	1K0 498 103
1T2	BVZ	6MT	2000	200511	200701	VW-B61	1K0 498 099	VWIU-5021	1K0 498 103	VWIU-5021	1K0 498 103
1T2	AZV	6MT	2000	200302	200805	VW-B62	1K0 498 099 B	VWIU-B6M1	1K0 498 103 A	VWIU-B6M1	1K0 498 103 A
1T2	BKD	6MT	2000	200308	200805	VW-B62	1K0 498 099 B	VWIU-B6M1	1K0 498 103 A	VWIU-B6M1	1K0 498 103 A
1T2	BMM	6MT	2000	200512	200805	VW-B62	1K0 498 099 B	VWIU-B6M1	1K0 498 103 A	VWIU-B6M1	1K0 498 103 A
1T2	BMN	6MT	2000	200512	200805		3C0 498 099	VWIU-B6M1	1K0 498 103 A	VWIU-B6M1	1K0 498 103 A
1T2	BVY	6AT	2000	200511	200701	VW-B61	1K0 498 099		1K0 498 103 C		1K0 498 103 C
1T2	BVZ	6AT	2000	200511	200701	VW-B61	1K0 498 099		1K0 498 103 C		1K0 498 103 C
1T2	BKD	6AT	2000	200308	200805	VW-B62	1K0 498 099 B	VWIU-B6A1	1K0 498 103 E	VWIU-B6A1	1K0 498 103 E
1T2	BMM	6AT	2000	200512	200805	VW-B62	1K0 498 099 B	VWIU-B6A1	1K0 498 103 E	VWIU-B6A1	1K0 498 103 E
1T2	BMN	6AT	2000	200512	200805		3C0 498 099	VWIU-B6A1	1K0 498 103 E	VWIU-B6A1	1K0 498 103 E
TIGUAN											
5N1 4Motion	BWK	6MT	1400	200711	200811	VW-B62	1K0 498 099 B		5N0 498 103		5N0 498 103
5N1	CBAA	6MT	2000	200801	200805		5N0 498 099		5N0 498 103		5N0 498 103
5N1	CBAB	6MT	2000	200711			5N0 498 099		5N0 498 103		5N0 498 103
5N1 4Motion	CAWA	6MT	2000	200801		VW-B62	1K0 498 099 B		5N0 498 103		5N0 498 103
5N1 4Motion	CAWB	6MT	2000	200711		VW-B62	1K0 498 099 B		5N0 498 103		5N0 498 103
5N1 4Motion	CBAA	6MT	2000	200801	200805		5N0 498 099		5N0 498 103		5N0 498 103
5N1 4Motion	CBAB	6MT	2000	200711			5N0 498 099		5N0 498 103		5N0 498 103
5N1 4Motion	CBBA	6MT	2000	200802			5N0 498 099		5N0 498 103		5N0 498 103
5N1 4Motion	CBBB	6MT	2000	200802			5N0 498 099		5N0 498 103		5N0 498 103
5N1 4Motion	CAWA	6AT	2000	200801		VW-B62	1K0 498 099 B		5N0 498 103 A		3C0 498 103 G
5N1 4Motion	CAWB	6AT	2000	200711		VW-B62	1K0 498 099 B		5N0 498 103 A		3C0 498 103 G
5N1 4Motion	CBAA	6AT	2000	200801	200805	VW-B62	1K0 498 099 B		5N0 498 103 A		3C0 498 103 G
5N1 4Motion	CBAB	6AT	2000	200711		VW-B62	1K0 498 099 B		5N0 498 103 A		3C0 498 103 G
TRANSPORTER II/TRANSPORTER III											
TRANSPORTER II/III	1.6 TD, Sync	MT	1600	198410	199207	VW-1014	443 498 103 A	VW-1014	443 498 103 A	VW-1014	443 498 103 A
TRANSPORTER II/III	1.9	MT	1900	198410	199207	VW-1014	443 498 103 A	VW-1014	443 498 103 A	VW-1014	443 498 103 A
TRANSPORTER II/III	1.9, Sync	MT	1900	198410	199207	VW-1014	443 498 103 A	VW-1014	443 498 103 A	VW-1014	443 498 103 A
TRANSPORTER II/III	2.1 i	MT	2100	198410	199207	VW-1014	443 498 103 A	VW-1014	443 498 103 A	VW-1014	443 498 103 A

VOLKSWAGEN

MODEL	ENGINE	AT/MT	CC	YEAR	YEAR	OUTER	O.E No.R	INNER R	O.E No.IR	INNER L	O.E No.IL
TRANSPORTER II/III	2.1, Sync	MT	2100	198410	199207	VW-1014	443 498 103 A	VW-1014	443 498 103 A	VW-1014	443 498 103 A
TRANSPORTER II/III	1.6 CT	MT	1600	198410	199207	VW-1001	251 598 101 X	VW-1001	251 598 101 X	VW-1001	251 598 101 X
TRANSPORTER II/III	1.6 D CS	MT	1600	198410	199207	VW-1001	251 598 101 X	VW-1001	251 598 101 X	VW-1001	251 598 101 X
TRANSPORTER II/III	1.6 TD JX	MT	1600	198410	199207	VW-1001	251 598 101 X	VW-1001	251 598 101 X	VW-1001	251 598 101 X
TRANSPORTER II/III	1.6 TD Sync JX	MT	1600	198410	199207	VW-1001	251 598 101 X	VW-1001	251 598 101 X	VW-1001	251 598 101 X
TRANSPORTER II/III	1.7 D KY	MT	1700	198410	199207	VW-1001	251 598 101 X	VW-1001	251 598 101 X	VW-1001	251 598 101 X
TRANSPORTER II/III	1.9 DF	MT	1900	198410	199207	VW-1001	251 598 101 X	VW-1001	251 598 101 X	VW-1001	251 598 101 X
TRANSPORTER II/III	1.9 DG	MT	1900	198410	199207	VW-1001	251 598 101 X	VW-1001	251 598 101 X	VW-1001	251 598 101 X
TRANSPORTER II/III	1.9 DH	MT	1900	198410	199207	VW-1001	251 598 101 X	VW-1001	251 598 101 X	VW-1001	251 598 101 X
TRANSPORTER II/III	1.9 GW	MT	1900	198410	199207	VW-1001	251 598 101 X	VW-1001	251 598 101 X	VW-1001	251 598 101 X
TRANSPORTER II/III	1.9 Sync DG	MT	1900	198410	199207	VW-1001	251 598 101 X	VW-1001	251 598 101 X	VW-1001	251 598 101 X
TRANSPORTER II/III	2.0 CU	MT	2000	198410	199207	VW-1001	251 598 101 X	VW-1001	251 598 101 X	VW-1001	251 598 101 X
TRANSPORTER II/III	2.0 i CV	MT	2000	198410	199207	VW-1001	251 598 101 X	VW-1001	251 598 101 X	VW-1001	251 598 101 X
TRANSPORTER II/III	2.1 DJ	MT	2100	198410	199207	VW-1001	251 598 101 X	VW-1001	251 598 101 X	VW-1001	251 598 101 X
TRANSPORTER II/III	2.1 i SS	MT	2100	198410	199207	VW-1001	251 598 101 X	VW-1001	251 598 101 X	VW-1001	251 598 101 X
TRANSPORTER II/III	2.1 MV	MT	2100	198410	199207	VW-1001	251 598 101 X	VW-1001	251 598 101 X	VW-1001	251 598 101 X
TRANSPORTER II/III	2.1 SR	MT	2100	198410	199207	VW-1001	251 598 101 X	VW-1001	251 598 101 X	VW-1001	251 598 101 X
TRANSPORTER II/III	2.1 Sync DJ	MT	2100	198410	199207	VW-1001	251 598 101 X	VW-1001	251 598 101 X	VW-1001	251 598 101 X
TRANSPORTER II/III	2.1 Sync MV	MT	2100	198410	199207	VW-1001	251 598 101 X	VW-1001	251 598 101 X	VW-1001	251 598 101 X
TRANSPORTER II/III	2.1 Sync SR	MT	2100	198410	199207	VW-1001	251 598 101 X	VW-1001	251 598 101 X	VW-1001	251 598 101 X
TRANSPORTER IV											
TRANSPORTER IV	1.8 PD	AT/MT	1800	199007		VW-018	701 498 099 X				
TRANSPORTER IV	1.8 PD	AT/MT	1800	199007		VW-018A48	701 498 099 AX				
TRANSPORTER IV	1.9 D 1X	AT/MT	1900	199007		VW-018	701 498 099 X				
TRANSPORTER IV	1.9 D 1X	AT/MT	1900	199007		VW-018A48	701 498 099 AX				
TRANSPORTER IV	1.9 D 1X	AT/MT	1900	199007		VW-028	701 498 099 B				
TRANSPORTER IV	1.9 D 1X	AT/MT	1900	199007		VW-028A48	701 498 099 C				
TRANSPORTER IV	1.9 TD ABL	AT/MT	1900	199007		VW-018	701 498 099 X				
TRANSPORTER IV	1.9 TD ABL	AT/MT	1900	199007		VW-018A48	701 498 099 AX				
TRANSPORTER IV	1.9 TD ABL	AT/MT	1900	199007		VW-028	701 498 099 B				
TRANSPORTER IV	1.9 TD ABL	AT/MT	1900	199007		VW-028A48	701 498 099 C				
TRANSPORTER IV	2.0 AAC	AT/MT	2000	199007		VW-018	701 498 099 X				
TRANSPORTER IV	2.0 AAC	AT/MT	2000	199007		VW-018A48	701 498 099 AX				
TRANSPORTER IV	2.0 AAC	AT/MT	2000	199007		VW-028	701 498 099 B				
TRANSPORTER IV	2.0 AAC	AT/MT	2000	199007		VW-028A48	701 498 099 C				
TRANSPORTER IV	2.4 D AAB	AT/MT	2400	199007		VW-018	701 498 099 X				
TRANSPORTER IV	2.4 D AAB	AT/MT	2400	199007		VW-018A48	701 498 099 AX				
TRANSPORTER IV	2.4 D AAB	AT/MT	2400	199007		VW-028	701 498 099 B				
TRANSPORTER IV	2.4 D AAB	AT/MT	2400	199007		VW-028A48	701 498 099 C				
TRANSPORTER IV	2.4 D Sync AAB	AT/MT	2400	199007		VW-028	701 498 099 B				
TRANSPORTER IV	2.4 D Sync AAB	AT/MT	2400	199007		VW-028A48	701 498 099 C				
TRANSPORTER IV	2.5 Sync AAF	AT/MT	2400	199007		VW-028	701 498 099 B				
TRANSPORTER IV	2.5 Sync AAF	AT/MT	2400	199007		VW-028A48	701 498 099 C				
TRANSPORTER IV	2.5 Sync ACU	AT/MT	2400	199007		VW-028	701 498 099 B				
TRANSPORTER IV	2.5 Sync ACU	AT/MT	2400	199007		VW-028A48	701 498 099 C				
TRANSPORTER IV	2.5 Sync AEN	AT/MT	2400	199007		VW-028	701 498 099 B				
TRANSPORTER IV	2.5 Sync AEN	AT/MT	2400	199007		VW-028A48	701 498 099 C				
TRANSPORTER IV	2.5 Sync AET	AT/MT	2400	199007		VW-028	701 498 099 B				
TRANSPORTER IV	2.5 Sync AET	AT/MT	2400	199007		VW-028A48	701 498 099 C				
TRANSPORTER IV	2.5 Sync AEU	AT/MT	2400	199007		VW-028	701 498 099 B				
TRANSPORTER IV	2.5 Sync AEU	AT/MT	2400	199007		VW-028A48	701 498 099 C				
TRANSPORTER IV	2.5 Sync APL	AT/MT	2400	199007		VW-028	701 498 099 B				
TRANSPORTER IV	2.5 Sync APL	AT/MT	2400	199007		VW-028A48	701 498 099 C				
TRANSPORTER IV	2.5 Sync AVT	AT/MT	2400	199007		VW-028	701 498 099 B				
TRANSPORTER IV	2.5 Sync AVT	AT/MT	2400	199007		VW-028A48	701 498 099 C				
TRANSPORTER IV	2.5 AAF	AT/MT	2500	199007		VW-018	701 498 099 X				
TRANSPORTER IV	2.5 AAF	AT/MT	2500	199007		VW-018A48	701 498 099 AX				
TRANSPORTER IV	2.5 AAF	AT/MT	2500	199007		VW-028	701 498 099 B				
TRANSPORTER IV	2.5 AAF	AT/MT	2500	199007		VW-028A48	701 498 099 C				
TRANSPORTER IV	2.5 ACU	AT/MT	2500	199007		VW-018	701 498 099 X				
TRANSPORTER IV	2.5 ACU	AT/MT	2500	199007		VW-018A48	701 498 099 AX				
TRANSPORTER IV	2.5 ACU	AT/MT	2500	199007		VW-028	701 498 099 B				
TRANSPORTER IV	2.5 ACU	AT/MT	2500	199007		VW-028A48	701 498 099 C				
TRANSPORTER IV	2.5 AEN	AT/MT	2500	199007		VW-018	701 498 099 X				
TRANSPORTER IV	2.5 AEN	AT/MT	2500	199007		VW-018A48	701 498 099 AX				
TRANSPORTER IV	2.5 AEN	AT/MT	2500	199007		VW-028	701 498 099 B				
TRANSPORTER IV	2.5 AEN	AT/MT	2500	199007		VW-028A48	701 498 099 C				
TRANSPORTER IV	2.5 AET	AT/MT	2500	199007		VW-028	701 498 099 B				
TRANSPORTER IV	2.5 AET	AT/MT	2500	199007		VW-028A48	701 498 099 C				
TRANSPORTER IV	2.5 AEU	AT/MT	2500	199007		VW-018	701 498 099 X				
TRANSPORTER IV	2.5 AEU	AT/MT	2500	199007		VW-018A48	701 498 099 AX				
TRANSPORTER IV	2.5 AEU	AT/MT	2500	199007		VW-028	701 498 099 B				
TRANSPORTER IV	2.5 AEU	AT/MT	2500	199007		VW-028A48	701 498 099 C				
TRANSPORTER IV	2.5 APL	AT/MT	2500	199007		VW-028	701 498 099 B				
TRANSPORTER IV	2.5 APL	AT/MT	2500	199007		VW-028A48	701 498 099 C				
TRANSPORTER IV	2.5 AVT	AT/MT	2500	199007		VW-028	701 498 099 B				
TRANSPORTER IV	2.5 AVT	AT/MT	2500	199007		VW-028A48	701 498 099 C				
TRANSPORTER IV	2.5 Sync AAF	AT/MT	2500	199007		VW-028	701 498 099 B				
TRANSPORTER IV	2.5 Sync AAF	AT/MT	2500	199007		VW-028A48	701 498 099 C				
TRANSPORTER IV	2.5 Sync ACU	AT/MT	2500	199007		VW-028	701 498 099 B				
TRANSPORTER IV	2.5 Sync ACU	AT/MT	2500	199007		VW-028A48	701 498 099 C				
TRANSPORTER IV	2.5 Sync AEN	AT/MT	2500	199007		VW-028	701 498 099 B				
TRANSPORTER IV	2.5 Sync AEN	AT/MT	2500	199007		VW-028A48	701 498 099 C				
TRANSPORTER IV	2.5 Sync AET	AT/MT	2500	199007		VW-028	701 498 099 B				
TRANSPORTER IV	2.5 Sync AET	AT/MT	2500	199007		VW-028A48	701 498 099 C				
TRANSPORTER IV	2.5 Sync AEU	AT/MT	2500	199007		VW-028	701 498 099 B				
TRANSPORTER IV	2.5 Sync AEU	AT/MT	2500	199007		VW-028A48	701 498 099 C				
TRANSPORTER IV	2.5 Sync APL	AT/MT	2500	199007		VW-028	701 498 099 B				
TRANSPORTER IV	2.5 Sync APL	AT/MT	2500	199007		VW-028A48	701 498 099 C				
TRANSPORTER IV	2.5 Sync AVT	AT/MT	2500	199007		VW-028	701 498 099 B				

VOLKSWAGEN

MODEL	ENGINE	AT/MT	CC	YEAR	YEAR	OUTER	O.E No.R	INNER R	O.E No.IR	INNER L	O.E No.IL
TRANSPORTER IV	2.5 Sync AVT	AT/MT	2500	199007		VW-028A48	701 498 099 C				
TRANSPORTER IV	2.5 TDI ACV	AT/MT	2500	199007		VW-028	701 498 099 B				
TRANSPORTER IV	2.5 TDI ACV	AT/MT	2500	199007		VW-028A48	701 498 099 C				
TRANSPORTER IV	2.5 TDI AUF	AT/MT	2500	199007		VW-028	701 498 099 B				
TRANSPORTER IV	2.5 TDI AUF	AT/MT	2500	199007		VW-028A48	701 498 099 C				
TRANSPORTER IV	2.5 TDI Sync ACV	AT/MT	2500	199007		VW-028	701 498 099 B				
TRANSPORTER IV	2.5 TDI Sync ACV	AT/MT	2500	199007		VW-028A48	701 498 099 C				
TRANSPORTER IV	2.8 VR 6 AES	AT/MT	2800	199007		VW-028	701 498 099 B				
TRANSPORTER IV	2.8 VR 6 AES	AT/MT	2800	199007		VW-028A48	701 498 099 C				
TRANSPORTER T5											
7H	AXC	5MT	1900	200304	200805	VW-T51	7H0 498 099	VWIR-T5M1	7H0 498 104 F	VWIL-T5M1	7H0 498 103
7H	BRR	5MT	1900	200601	200805	VW-T51	7H0 498 099	VWIR-T5M1	7H0 498 104 F	VWIL-T5M1	7H0 498 103
7H	BRS	5MT	1900	200601	200805	VW-T51	7H0 498 099	VWIR-T5M1	7H0 498 104 F	VWIL-T5M1	7H0 498 103
7H	AXA	5MT	2000	200311	200805	VW-T51	7H0 498 099	VWIR-T5M1	7H0 498 104 F	VWIL-T5M1	7H0 498 103
7H	AXB	5MT	2000	200311	200805	VW-T51	7H0 498 099	VWIR-T5M1	7H0 498 104 F	VWIL-T5M1	7H0 498 103
7H	AXD	6MT	2500	200304	200805	VW-T52	7H0 498 099 B	VWIR-T5M2	7H0 498 104 G	VWIL-T5M2	7H0 498 103 C
7H	AXE	6MT	2500	200304	200805	VW-T52	7H0 498 099 B	VWIR-T5M2	7H0 498 104 G	VWIL-T5M2	7H0 498 103 C
7H	BLJ	6MT	2500	200311	200805	VW-T52	7H0 498 099 B	VWIR-T5M2	7H0 498 104 G	VWIL-T5M2	7H0 498 103 C
7H	BNZ	6MT	2500	200601	200805	VW-T52	7H0 498 099 B	VWIR-T5M2	7H0 498 104 G	VWIL-T5M2	7H0 498 103 C
7H	BPC	6MT	2500	200601	200805	VW-T52	7H0 498 099 B	VWIR-T5M2	7H0 498 104 G	VWIL-T5M2	7H0 498 103 C
7H 4Motion	AXD	6MT	2500	200304	200805	VW-T52	7H0 498 099 B		7H0 498 104 D	VWIL-T5M2	7H0 498 103 C
7H 4Motion	AXE	6MT	2500	200304	200805	VW-T52	7H0 498 099 B		7H0 498 104 D	VWIL-T5M2	7H0 498 103 C
7H 4Motion	BNZ	6MT	2500	200601	200805	VW-T52	7H0 498 099 B		7H0 498 104 D	VWIL-T5M2	7H0 498 103 C
7H 4Motion	BPC	6MT	2500	200601	200805	VW-T52	7H0 498 099 B		7H0 498 104 D	VWIL-T5M2	7H0 498 103 C
7H>>7H-7H086 844 >>7H-7X018 284	AXD	6AT	2500	200304	200805	VW-T52	7H0 498 099 B		7H0 498 104 H		7H0 498 103 B
7H >>7H-7H086 844 >>7H-7X018 284	AXE	6AT	2500	200304	200805	VW-T52	7H0 498 099 B		7H0 498 104 H		7H0 498 103 B
7H>>7H-7H086 844>>7H-7X018 284	BNZ	6AT	2500	200601	200805	VW-T52	7H0 498 099 B		7H0 498 104 H		7H0 498 103 B
7H >>7H-7H086 844>>7H-7X018 284	BPC	6AT	2500	200601	200805	VW-T52	7H0 498 099 B		7H0 498 104 H		7H0 498 103 B
7H7H-7H086 845>>7H-7X018 285>>	AXD	6AT	2500	200304	200805	VW-T52	7H0 498 099 B		7H0 498 104 J		7H0 498 103 D
7H7H-7H086 845>>7H-7X018 285>>	AXE	6AT	2500	200304	200805	VW-T52	7H0 498 099 B		7H0 498 104 J		7H0 498 103 D
7H7H-7H086 845>>7H-7X018 285>>	BNZ	6AT	2500	200601	200805	VW-T52	7H0 498 099 B		7H0 498 104 J		7H0 498 103 D
7H7H-7H086 845>>7H-7X018 285>>	BPC	6AT	2500	200601	200805	VW-T52	7H0 498 099 B		7H0 498 104 J		7H0 498 103 D
7H 4Motion>>7H-7H086 844>>7H-7X018 284	BKK	6MT	3200	200705	200805	VW-T52	7H0 498 099 B		7H0 498 104 E		7H0 498 103 B
7H 4Motion7H-7H086 845>>7H-7X018 285>>	BKK	6MT	3200	200705	200805	VW-T52	7H0 498 099 B		7H0 498 104 E		7H0 498 103 D
7H>>7H-7H086 844 >>7H-7X018 284	BKK	6AT	3200	200705	200805	VW-T52	7H0 498 099 B		7H0 498 104 B		7H0 498 103 B
7H7H-7H086 845>>7H-7X018 285>>	BKK	6AT	3200	200705	200805	VW-T52	7H0 498 099 B		7H0 498 104 B		7H0 498 103 D
7J	AXC	5MT	1900	200304	200805	VW-T51	7H0 498 099	VWIR-T5M1	7H0 498 104 F	VWIL-T5M1	7H0 498 103
7J	BRR	5MT	1900	200601	200805	VW-T51	7H0 498 099	VWIR-T5M1	7H0 498 104 F	VWIL-T5M1	7H0 498 103
7J	BRS	5MT	1900	200601	200805	VW-T51	7H0 498 099	VWIR-T5M1	7H0 498 104 F	VWIL-T5M1	7H0 498 103
7J	AXA	5MT	2000	200311	200805	VW-T51	7H0 498 099	VWIR-T5M1	7H0 498 104 F	VWIL-T5M1	7H0 498 103
7J	AXB	5MT	2000	200311	200805	VW-T51	7H0 498 099	VWIR-T5M1	7H0 498 104 F	VWIL-T5M1	7H0 498 103
7J	AXD	6MT	2500	200304	200805	VW-T52	7H0 498 099 B	VWIR-T5M2	7H0 498 104 G	VWIL-T5M2	7H0 498 103 C
7J	AXE	6MT	2500	200304	200805	VW-T52	7H0 498 099 B	VWIR-T5M2	7H0 498 104 G	VWIL-T5M2	7H0 498 103 C
7J	BLJ	6MT	2500	200311	200805	VW-T52	7H0 498 099 B	VWIR-T5M2	7H0 498 104 G	VWIL-T5M2	7H0 498 103 C
7J	BNZ	6MT	2500	200601	200805	VW-T52	7H0 498 099 B	VWIR-T5M2	7H0 498 104 G	VWIL-T5M2	7H0 498 103 C
7J	BPC	6MT	2500	200601	200805	VW-T52	7H0 498 099 B	VWIR-T5M2	7H0 498 104 G	VWIL-T5M2	7H0 498 103 C
7J 4Motion	AXD	6MT	2500	200304	200805	VW-T52	7H0 498 099 B		7H0 498 104 D	VWIL-T5M2	7H0 498 103 C
7J 4Motion	BNZ	6MT	2500	200601	200805	VW-T52	7H0 498 099 B		7H0 498 104 D	VWIL-T5M2	7H0 498 103 C
7J 4Motion	BPC	6MT	2500	200601	200805	VW-T52	7H0 498 099 B		7H0 498 104 D	VWIL-T5M2	7H0 498 103 C
7J>>7J-7X018356	AXD	6AT	2500	200304	200805	VW-T52	7H0 498 099 B		7H0 498 104 H		7H0 498 103 B
7J>>7J-7X018356	AXE	6AT	2500	200304	200805	VW-T52	7H0 498 099 B		7H0 498 104 H		7H0 498 103 B
7J>>7J-7X018356	BNZ	6AT	2500	200601	200805	VW-T52	7H0 498 099 B		7H0 498 104 H		7H0 498 103 B
7J>>7J-7X018356	BPC	6AT	2500	200601	200805	VW-T52	7H0 498 099 B		7H0 498 104 H		7H0 498 103 B
7J7J-7X018357>>	AXD	6AT	2500	200304	200805	VW-T52	7H0 498 099 B		7H0 498 104 J		7H0 498 103 D
7J7J-7X018357>>	AXE	6AT	2500	200304	200805	VW-T52	7H0 498 099 B		7H0 498 104 J		7H0 498 103 D
7J7J-7X018357>>	BNZ	6AT	2500	200601	200805	VW-T52	7H0 498 099 B		7H0 498 104 J		7H0 498 103 D
7J7J-7X018357>>	BPC	6AT	2500	200601	200805	VW-T52	7H0 498 099 B		7H0 498 104 J		7H0 498 103 D
7J>>7J-7X018356	BDL	6AT	3200	200402	200805	VW-T52	7H0 498 099 B		7H0 498 104 B		7H0 498 103 B
7J7J-7X018357>>	BDL	6AT	3200	200402	200805	VW-T52	7H0 498 099 B		7H0 498 104 B		7H0 498 103 D
VENTO											
VENTO (1H2)	1.6 AEK	AT/MT	1600	199111	199809	VW-011	1H0 498 099				
VENTO (1H2)	1.6 AFT	AT/MT	1600	199111	199809	VW-011	1H0 498 099				
VENTO (1H2)	1.8 AAM	AT/MT	1800	199111	199809	VW-011	1H0 498 099	VWIU-5021	191 498 103	VWIU-5021	191 498 103
VENTO (1H2)	1.8 ABS	AT/MT	1800	199111	199809	VW-011	1H0 498 099	VWIU-5021	191 498 103	VWIU-5021	191 498 103
VENTO (1H2)	1.8 ADZ	AT/MT	1800	199111	199809	VW-011	1H0 498 099	VWIU-5021	191 498 103	VWIU-5021	191 498 103
VENTO (1H2)	1.9 TD AAZ	AT/MT	1900	199111	199809	VW-011	1H0 498 099	VWIU-5021	191 498 103	VWIU-5021	191 498 103
VENTO (1H2)	2.0 2E	AT/MT	2000	199111	199809	VW-011	1H0 498 099	VWIU-5021	191 498 103	VWIU-5021	191 498 103
VENTO (1H2)	2.0 ADY	AT/MT	2000	199111	199809	VW-011	1H0 498 099	VWIU-5021	191 498 103	VWIU-5021	191 498 103
VENTO (1H2)	2.0 AGG	AT/MT	2000	199111	199809	VW-011	1H0 498 099	VWIU-5021	191 498 103	VWIU-5021	191 498 103
VENTO (1H2)	2.0 AKR	AT/MT	2000	199111	199809	VW-011	1H0 498 099	VWIU-5021	191 498 103	VWIU-5021	191 498 103

VOLVO

MODEL	ENGINE	AT/MT	CC	YEAR	YEAR	OUTER	O.E No.R	INNER R	O.E No.IR	INNER L	O.E No.IL
						440					
	1.7L	MT	1700	198801	199612	VO-058A44	3433101-7	VOTRIP-440	3410419	VOTRIP-440	3410419
	1.7L	MT	1700	198901	199612	VO-058A44	3433101-7	VOTRIP-440	3410419	VOTRIP-440	3410419
	1.7L TURBO	MT	1700	198801	199612	VO-143A44	3433105				
	1.7L TURBO	MT	1700	199101	199612	VO-143A44	3433105				
	1.8L	MT	1800	199101	199612	VO-058A44	3433101-7	VOTRIP-440	3410419	VOTRIP-440	3410419
	2.0L	MT	2000	199308	199612	VO-058A44	3433101-7	VOTRIP-440	3410419	VOTRIP-440	3410419
	2.0L	MT	2000	199208	199612	VO-058A44	3433101-7	VOTRIP-440	3410419	VOTRIP-440	3410419
						460					
	1.7L	MT	1700	198801	199612	VO-058A44	3433101-7	VOTRIP-440	3410419	VOTRIP-440	3410419
	1.7L	MT	1700	199001	199612	VO-058A44	3433101-7	VOTRIP-440	3410419	VOTRIP-440	3410419
	1.7L	MT	1700	198901	199212	VO-058A44	3433101-7	VOTRIP-440	3410419	VOTRIP-440	3410419
	1.7L TURBO	MT	1700	198801	199612	VO-143A44	3433105				
						480					
	1.7L	MT	1700	198901	199212	VO-058A44	3433101-7	VOTRIP-440	3410419	VOTRIP-440	3410419
	1.7L TURBO	MT	1700	198801	199612	VO-143A44	3433105				
						850					
	2.0L	MT	2000	199106	199612	VO-148	8111304	VOIR-850	8111303	VOIL-850	8111304
	2.0L	AT/MT	2000	199106	199612	VO-148A48	8601100				
	2.0L 10V	MT	2000	199306	199612	VO-148	8111304	VOIR-850	8111303	VOIL-850	8111304
	2.0L 10V	AT/MT	2000	199306	199612	VO-148A48	8601100				
	2.0L 20V TURBO	AT/MT	2000	199306	199612	VO-192A48	8601102				
	2.3L T5	AT/MT	2300	199306	199612	VO-192A48	8601102				
	2.3L T5-R	AT/MT	2300	199506	199612	VO-192A48	8601102				
	2.5L 10V	AT/MT	2500	199106	199412	VO-148A48	8601100	VOIR-850	8111303	VOIL-850	8111304
	2.5L 10V	AT/MT	2500	199106	199612	VO-148A48	8601100	VOIR-850	8111303	VOIL-850	8111304
	2.5L 20V	AT/MT	2500	199106	199612	VO-148A48	8601100	VOIR-850	8111303	VOIL-850	8111304
	2.5L AWD	AT/MT	2500	199604	199612	VO-192A48	8601102				
	2.5L TDI	AT/MT	2500	199604	199612	VO-192A48	8601102				
						S40					
	1.9TD VS	AT/MT	1900	199507		MT-801A43	30871328				
	1.9TD VW	AT/MT	1900	199507		MT-801A43	30871328				
						C70					
	2.0L 20V	MT	2000	199703	200209	VO-148	8111304	VOIR-850	8111303	VOIL-850	8111304
	2.0L 20V	AT/MT	2000	199703	200209	VO-148A48	8601100				
	2.0L 20V T	AT/MT	2000	199703	200209	VO-192A48	8601102				
	2.3L 20V T-5	AT/MT	2300	199703	200209	VO-192A48	8601102				
	2.4L	AT/MT	2400	199901		VO-617A48	8251517				
	2.4L T	AT/MT	2400	199901		VO-618A48	8602574				
	2.5L 20V T	AT/MT	2500	199703	200209	VO-192A48	8601102				
						S70					
	2.0L	AT/MT	2000	199703	200009	VO-148A48	8601100				
	2.0L	MT	2000	199703	200009	VO-148	8111304	VOIR-850	8111303	VOIL-850	8111304
	2.0L 20V	AT/MT	2000	199703	200009	VO-148A48	8601100				
	2.0L 20V	MT	2000	199703	200009	VO-148	8111304	VOIR-850	8111303	VOIL-850	8111304
	2.0L 20V TURBO	AT/MT	2000	199703	200009	VO-192A48	8601102				
	2.3L 20V T-5	AT/MT	2300	199703	200009	VO-192A48	8601102				
	2.3L TURBO	AT/MT	2300	199703	200009	VO-192A48	8601102				
	2.4L 20V	AT/MT	2400	199703	200009	VO-148A48	8601100				
	2.4L 20V	MT	2400	199703	200009	VO-148	8111304	VOIR-850	8111303	VOIL-850	8111304
	2.4L 20V TURBO	AT/MT	2400	199703	200009	VO-192A48	8601102				
	2.4L	AT/MT	2400	199901		VO-617A48	8251517				
	2.4L TURBO	AT/MT	2400	199901		VO-618A48	8602574				
	2.5L	AT/MT	2500	199703	200009	VO-148A48	8601100				
	2.5L	MT	2500	199703	200009	VO-148	8111304	VOIR-850	8111303	VOIL-850	8111304
	2.5L TDI	AT/MT	2500	199703	200009	VO-192A48	8601102				
	2.5L TDI	AT/MT	2500	199901		VO-618A48	8602574				
						V70					
	2.0L	AT/MT	2000	199703	200009	VO-148A48	8601100				
	2.0L	MT	2000	199703	200009	VO-148	8111304	VOIR-850	8111303	VOIL-850	8111304
	2.0L 20V	AT/MT	2000	199703	200009	VO-148A48	8601100				
	2.0L 20V	MT	2000	199703	200009	VO-148	8111304	VOIR-850	8111303	VOIL-850	8111304
	2.0L 20V TURBO	AT/MT	2000	199703	200009	VO-192A48	8601102				
	2.0L 20V TURBO AWD	AT/MT	2000	199703	200009	VO-192A48	8601102				
	2.0L TURBO	AT/MT	2000	199901		VO-617A48	8251517				
	2.3L 20V T-5	AT/MT	2300	199703	200009	VO-192A48	8601102				
	2.3L TURBO	AT/MT	2300	199703	200009	VO-192A48	8601102				
	2.3L AWD	AT/MT	2300	199703	200009	VO-192A48	8601102				
	2.4L 20V	AT/MT	2400	199703	200009	VO-148A48	8601100				
	2.4L 20V	MT	2400	199703	200009	VO-148	8111304	VOIR-850	8111303	VOIL-850	8111304
	2.4L 20V TURBO	AT/MT	2400	199703	200009	VO-192A48	8601102				
	2.4L	AT/MT	2400	199901		VO-617A48	8251517				
	2.4L TURBO	AT/MT	2400	199901		VO-618A48	8602574				
	2.4L AWD	AT/MT	2400	199901		VO-618A48	8602574				
	2.5L	AT/MT	2500	199703	200009	VO-148A48	8601100				
	2.5L	MT	2500	199703	200009	VO-148	8111304	VOIR-850	8111303	VOIL-850	8111304
	2.5L TURBO AWD	AT/MT	2500	199703	200009	VO-192A48	8601102				
	2.5L TDI	AT/MT	2500	199703	200009	VO-192A48	8601102				
	2.5L TDI	AT/MT	2500	199901		VO-618A48	8602574				
						S80					
	2.4L	AT/MT	2400	199901		VO-617A48	8251517				
	2.4L D5	AT/MT	2400	199901		VO-618A48	8602574				
	2.4L TURBO	AT/MT	2400	200101		VO-618A48	8602574				
	2.5L TDI	AT/MT	2500	199901		VO-618A48	8602574				

VOLVO

MODEL	ENGINE	AT/MT	CC	YEAR	YEAR	OUTER	O.E No.R	INNER R	O.E No.IR	INNER L	O.E No.IL
	2.8L T6	AT/MT	2800	199901		VO-618A48	8602574				
	2.9L	AT/MT	2800	199901		VO-618A48	8602574				
						XC90					
	2,4 Tdi	AT	2400	200201	200601	VO-XC9A48	8601581				
	2,4d	AT/MT	2400	200601		VO-XC9A48	8603801				
	2,5	AT/MT	2500	200201		VO-XC9A48	8602531				
	2,8	AT	2800	200101	200601	VO-XC9A48	8603311				
	2,9 T6	AT	2900	200201	200601	VO-XC9A48	8603802				
	3,2	AT	3200	200601		VO-XC9A48	8603882				
	4,4	AT	4400	200601		VO-XC9A48	8603882				

DRIVE SHAFT / ПРИВОД И ПОЛУОСЬ

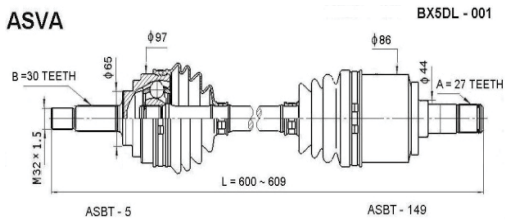

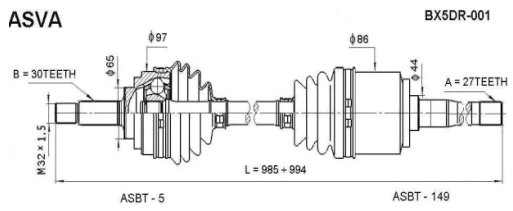

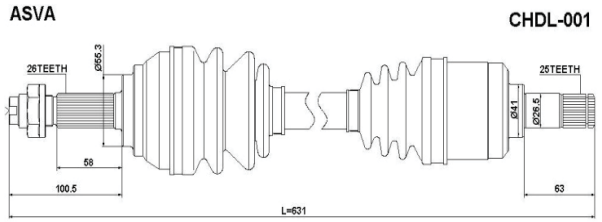

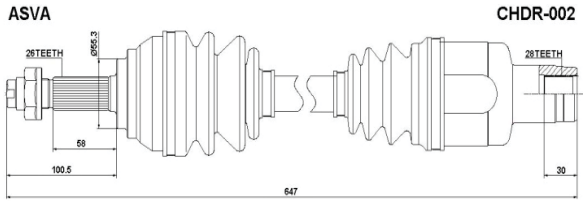

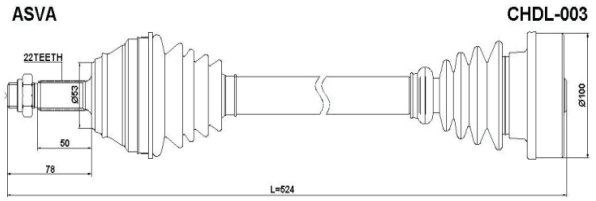

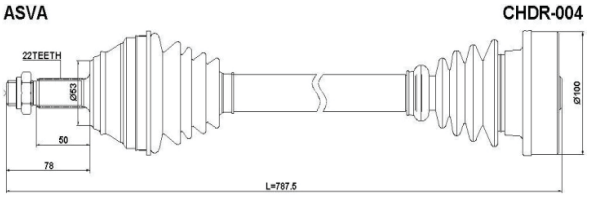

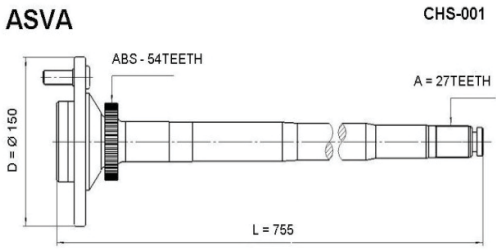

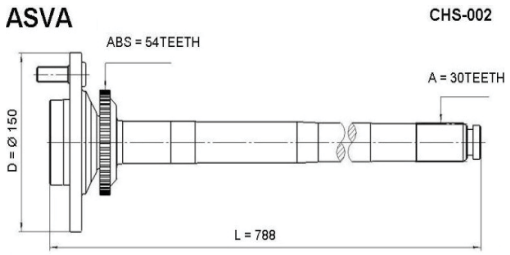

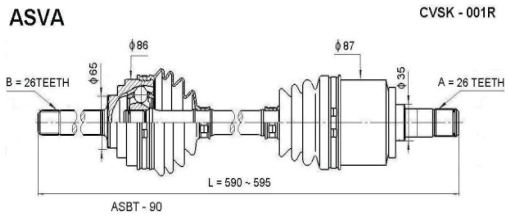

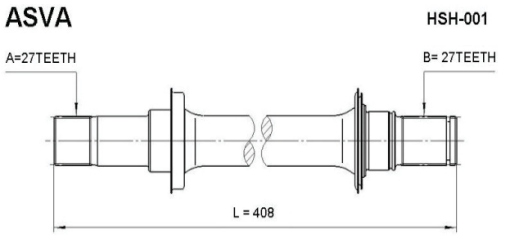

DRIVE SHAFT / ПРИВОД И ПОЛУОСЬ

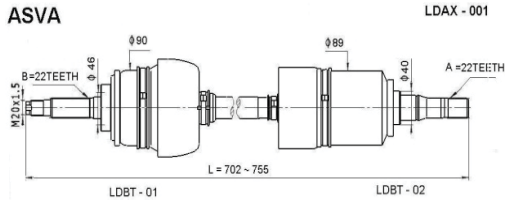

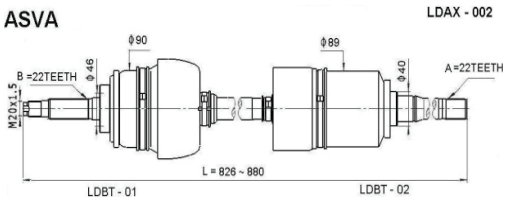

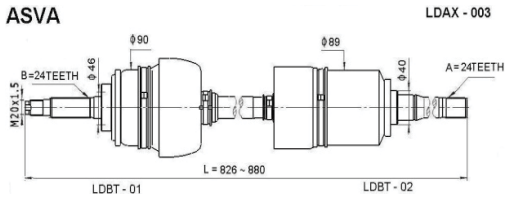

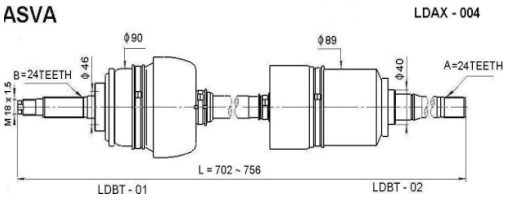

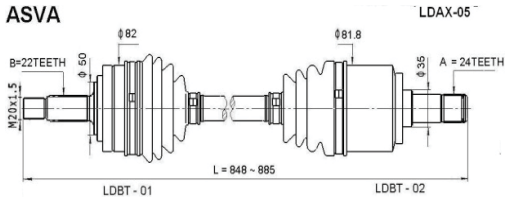

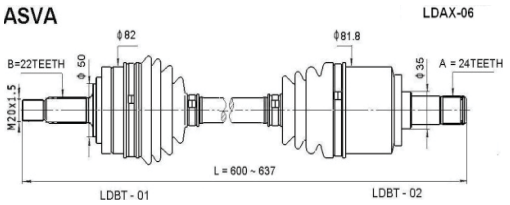

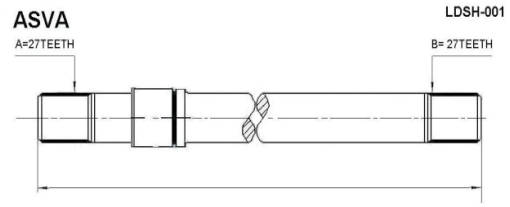

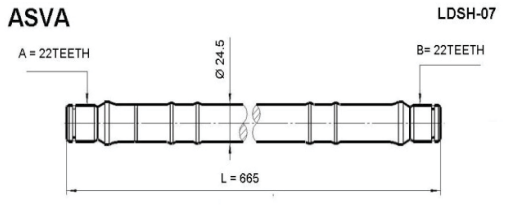

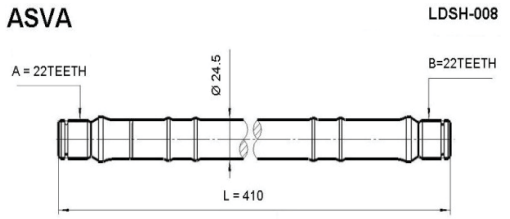

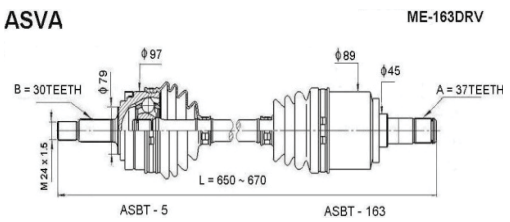

DRIVE SHAFT / ПРИВОД И ПОЛУОСЬ

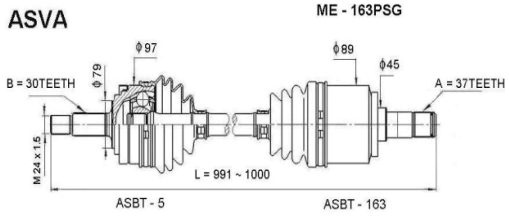

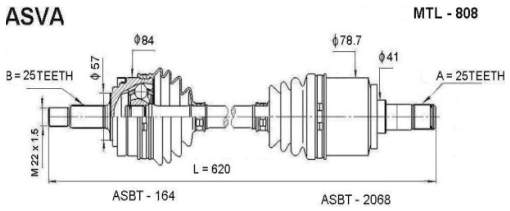

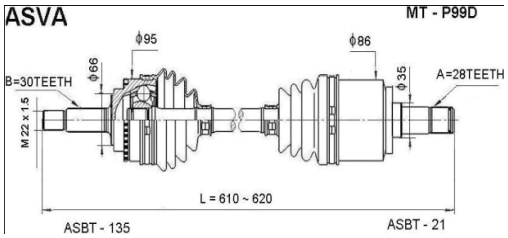

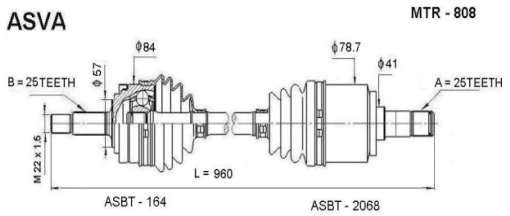

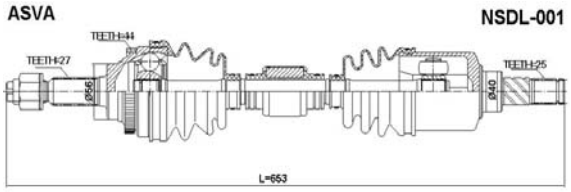

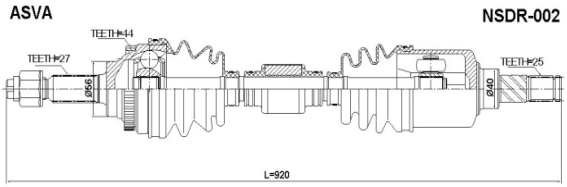

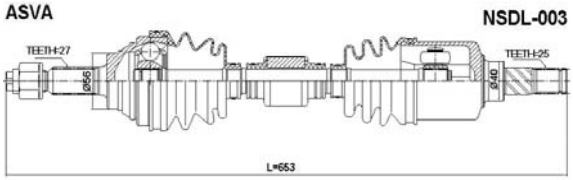

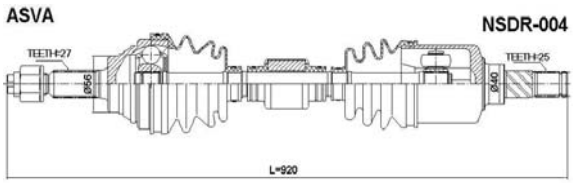

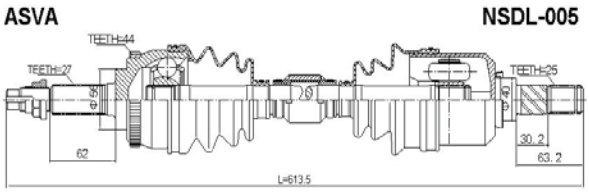

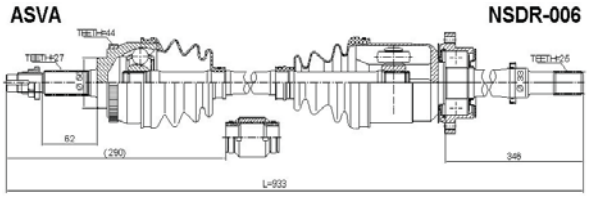

DRIVE SHAFT / ПРИВОД И ПОЛУОСЬ

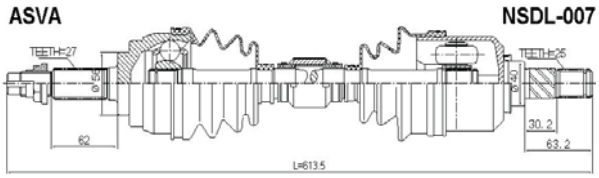

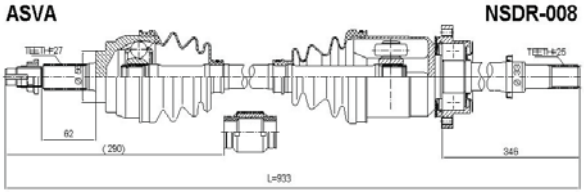

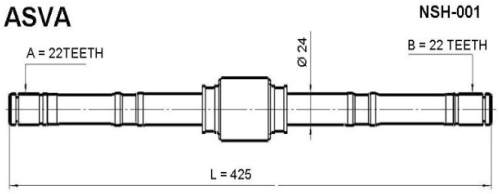

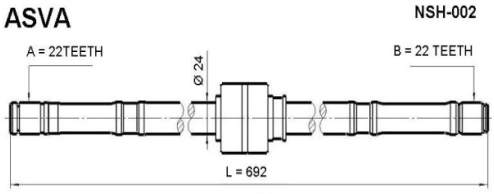

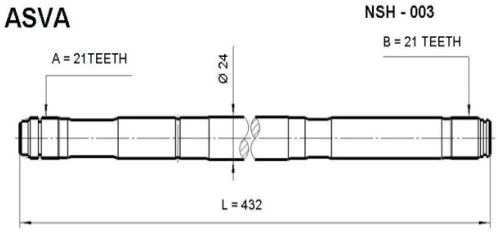

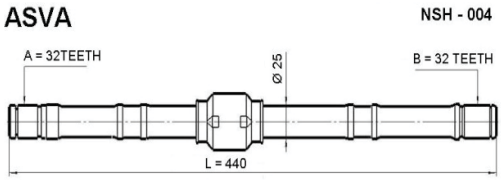

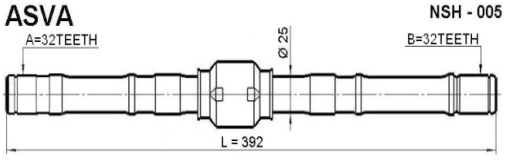

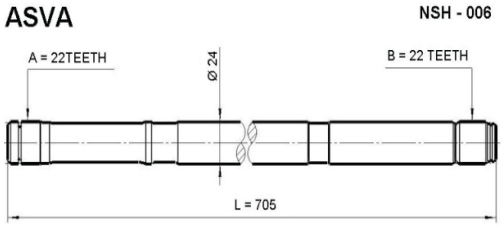

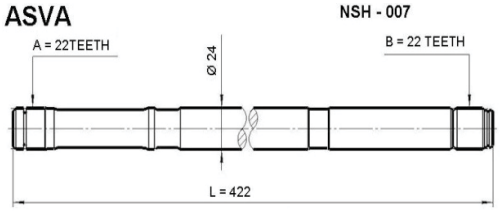

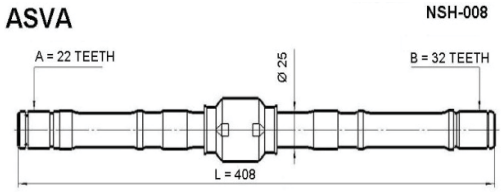

DRIVE SHAFT / ПРИВОД И ПОЛУОСЬ

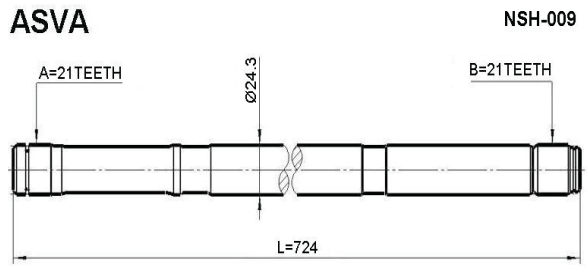

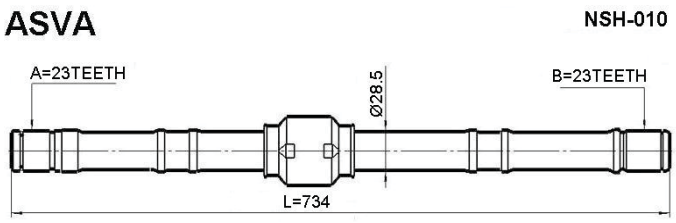

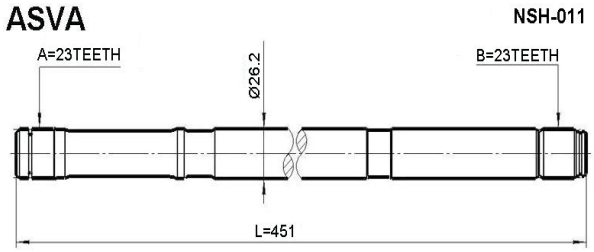

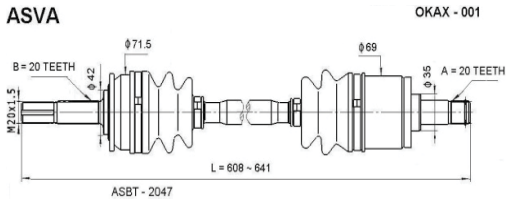

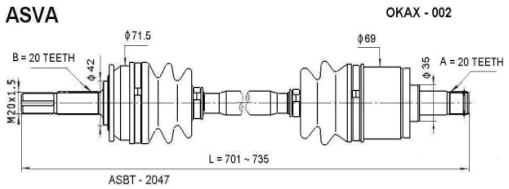

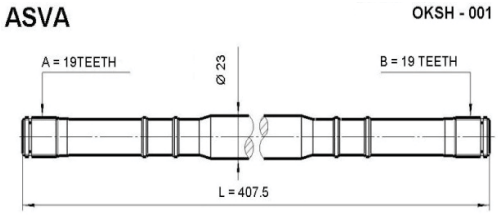

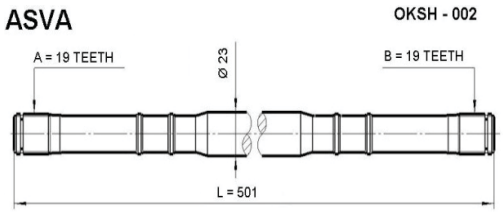

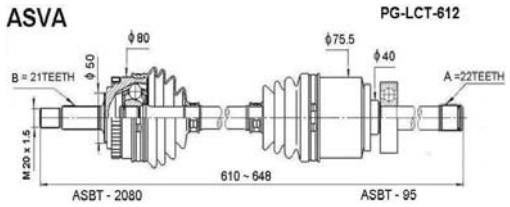

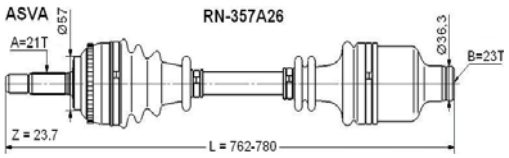

DRIVE SHAFT / ПРИВОД И ПОЛУОСЬ

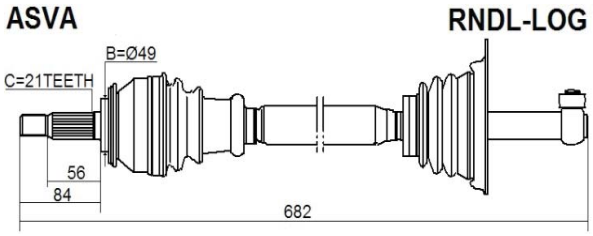

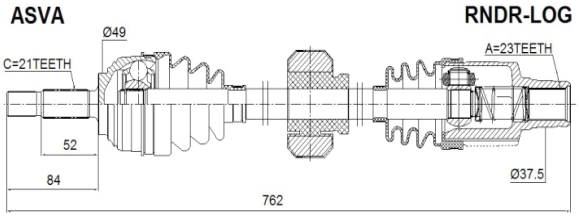

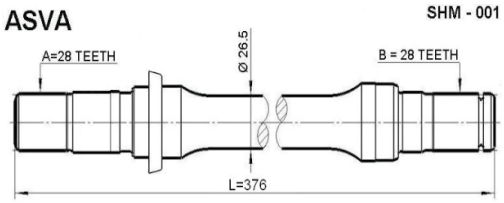

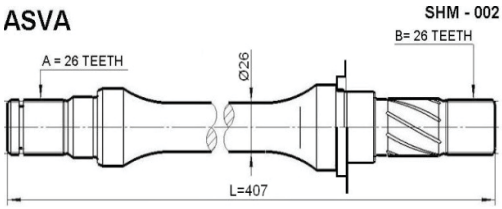

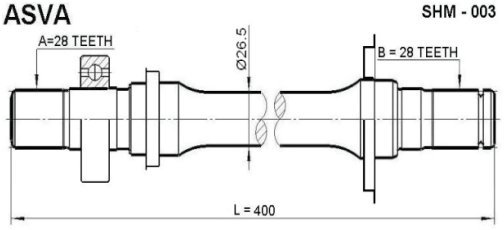

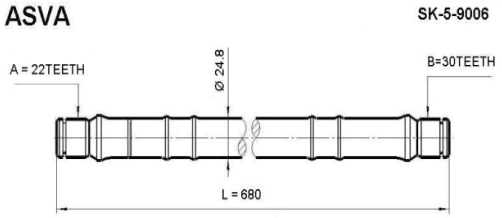

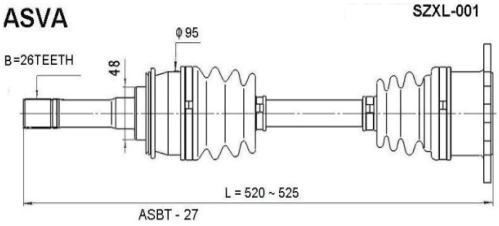

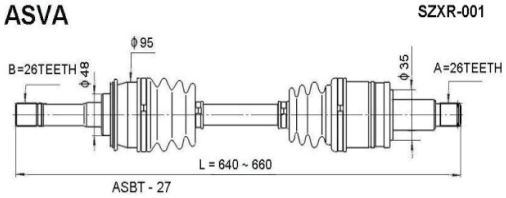

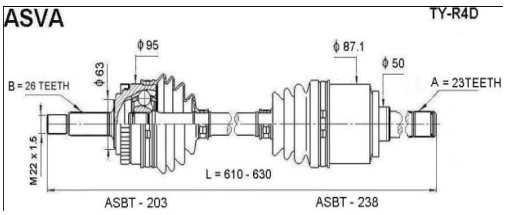

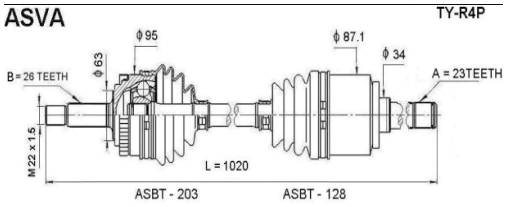

C.V. JOINT OUTER/ ШРУС НАРУЖНИЙ

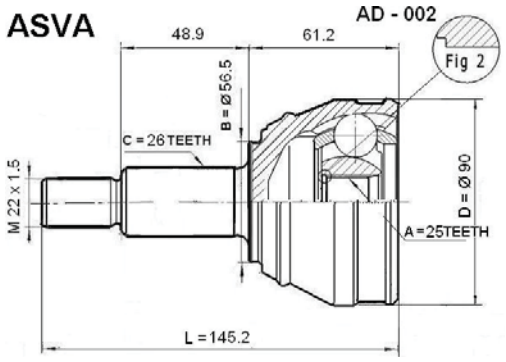

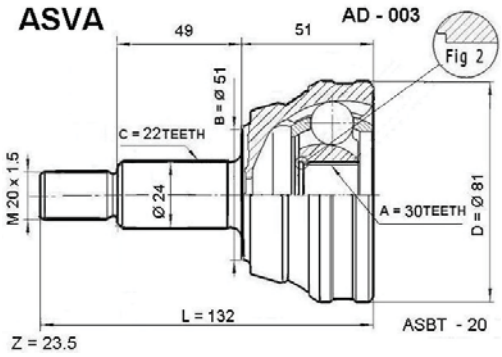

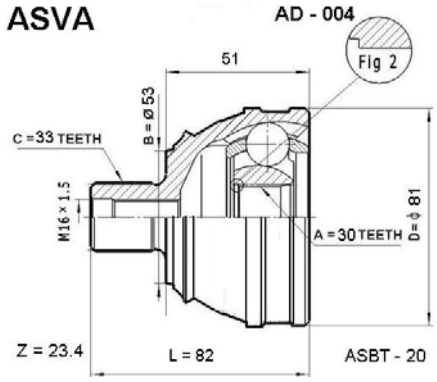

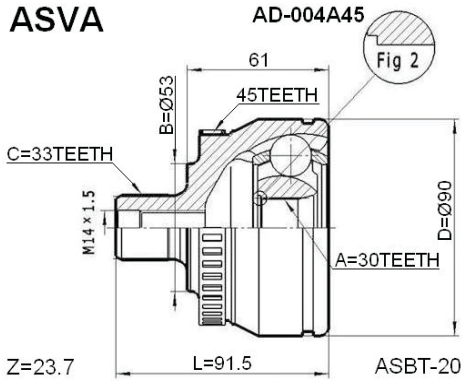

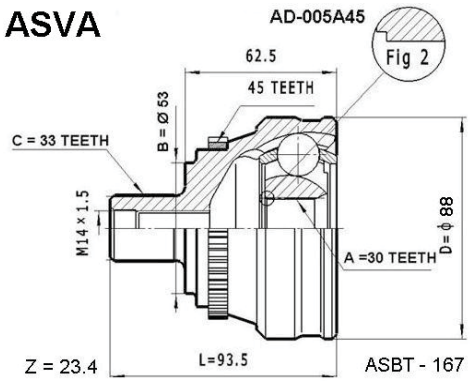

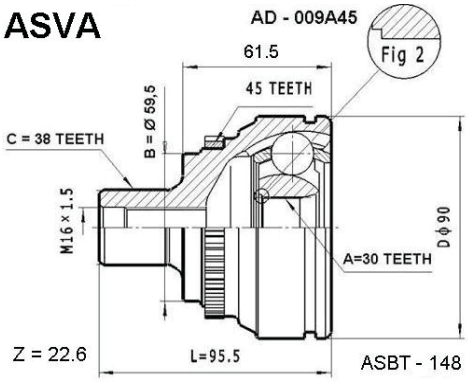

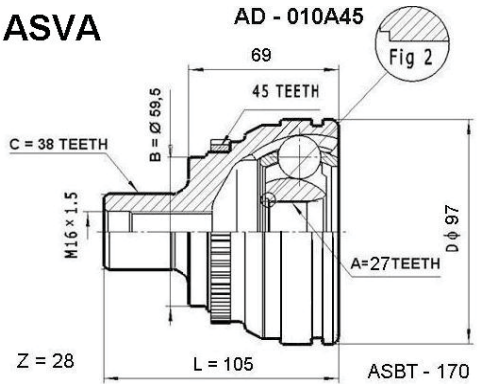

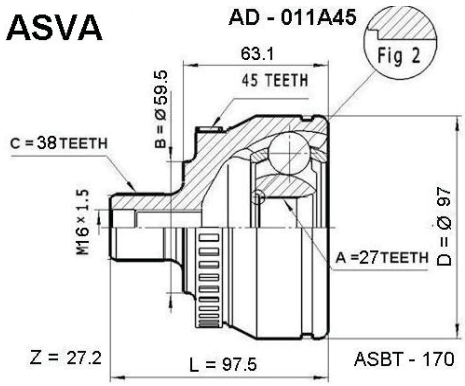

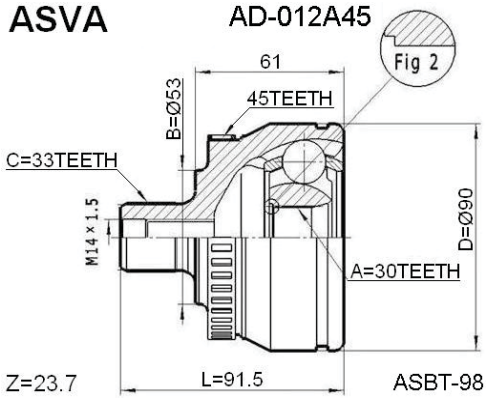

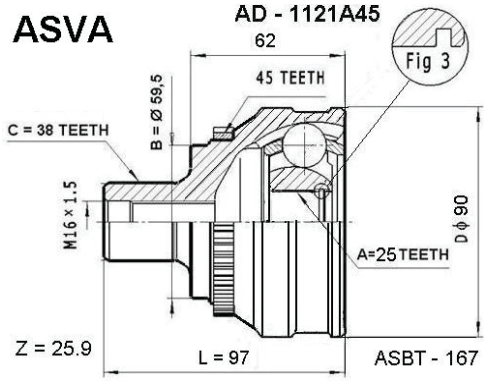

C.V. JOINT OUTER/ ШРУС НАРУЖНИЙ

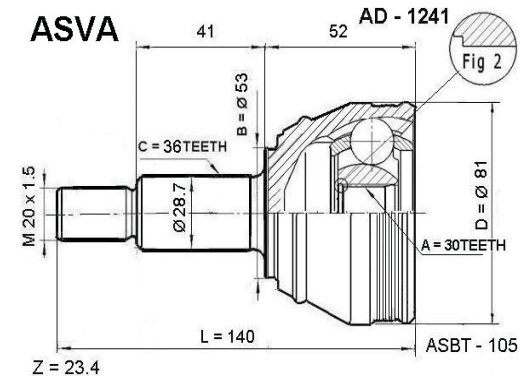

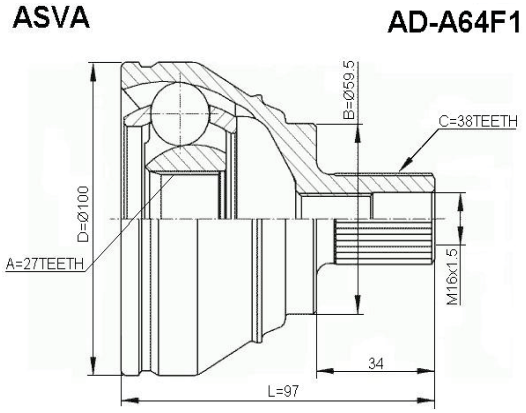

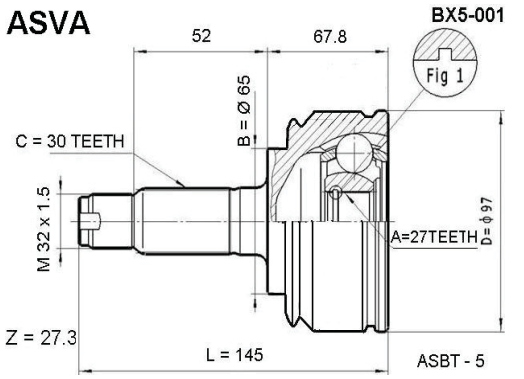

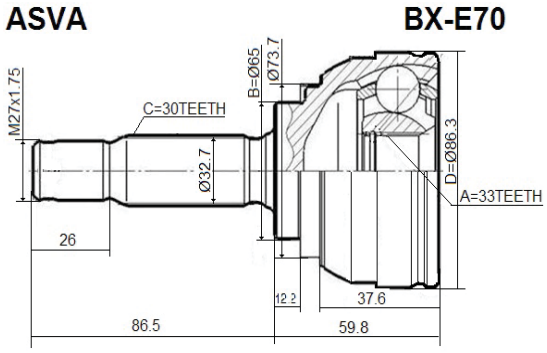

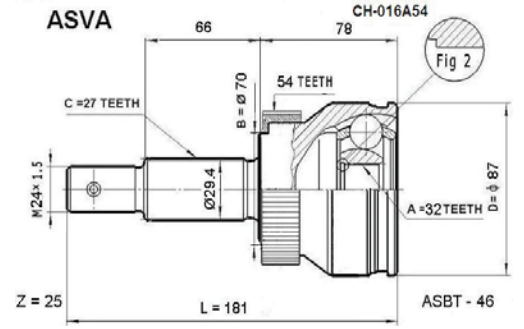

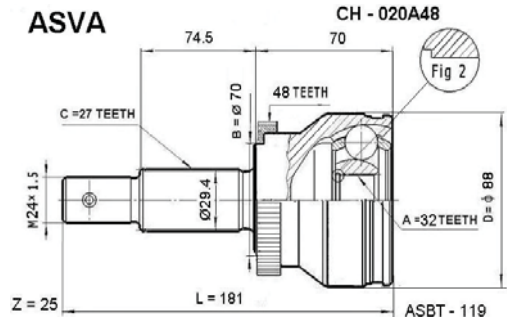

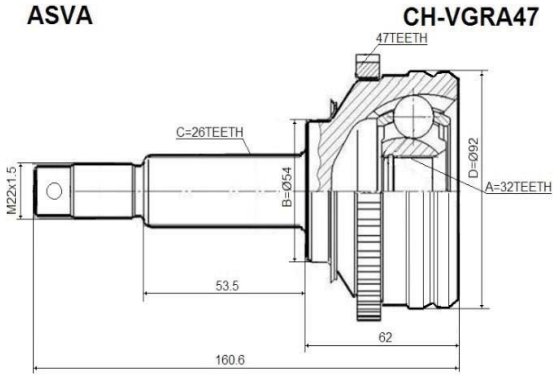

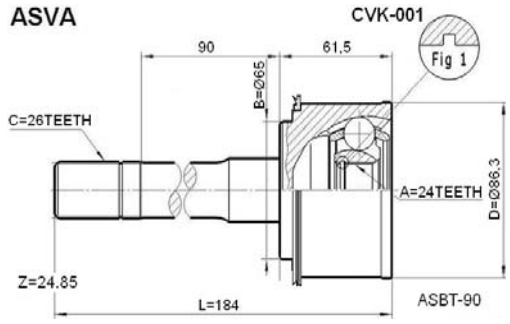

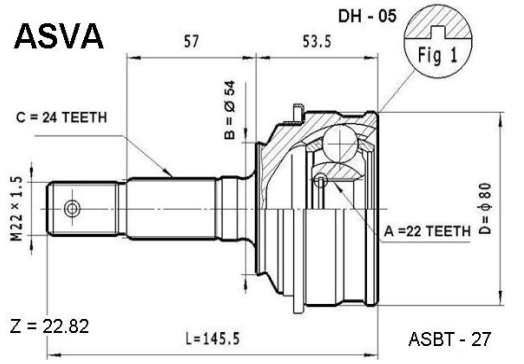

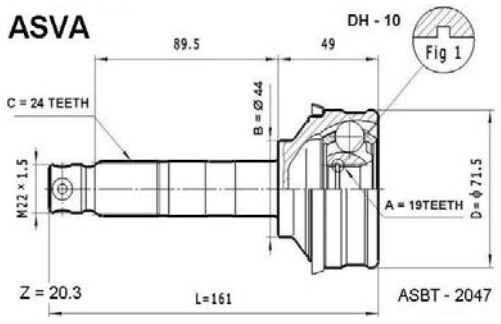

C.V. JOINT OUTER/ ШРУС НАРУЖНИЙ

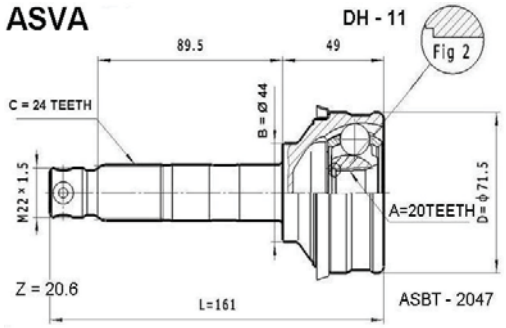

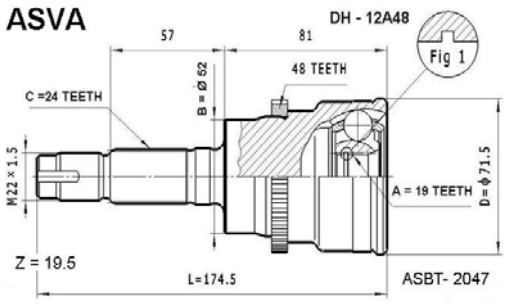

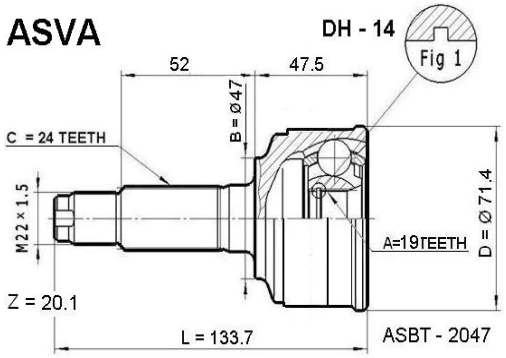

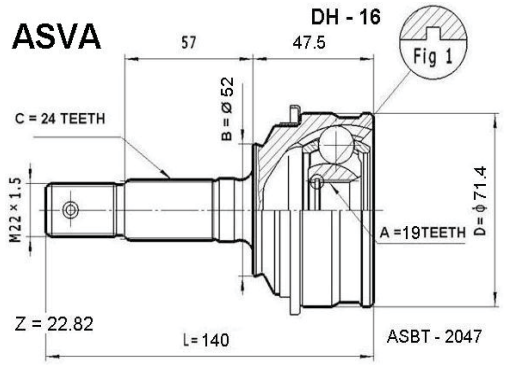

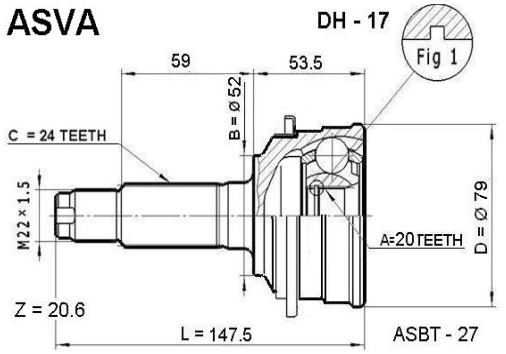

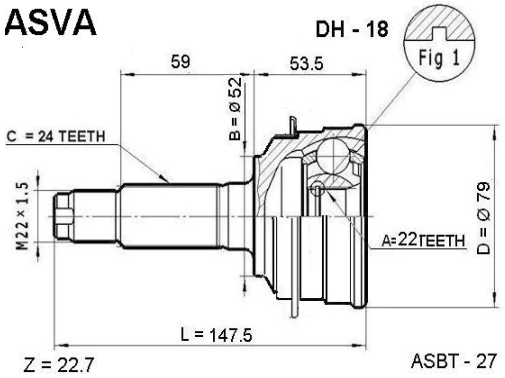

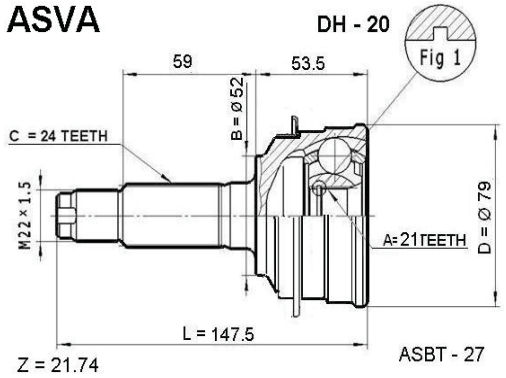

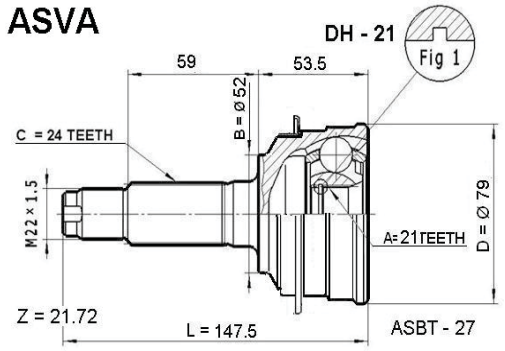

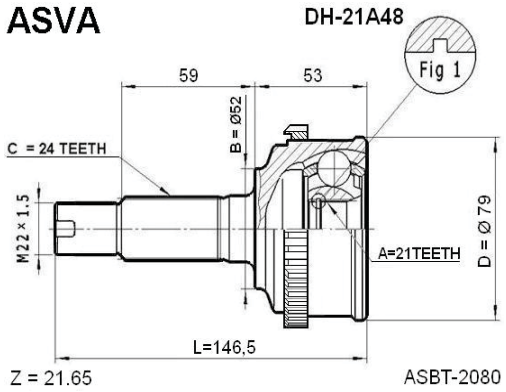

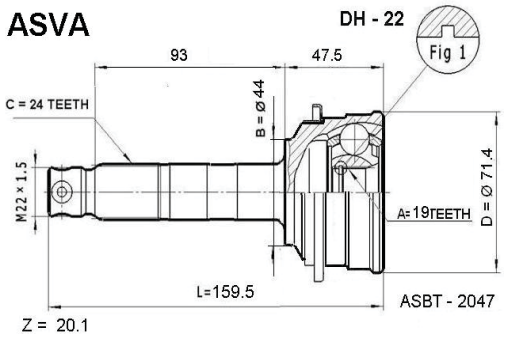

C.V. JOINT OUTER/ ШРУС НАРУЖНИЙ

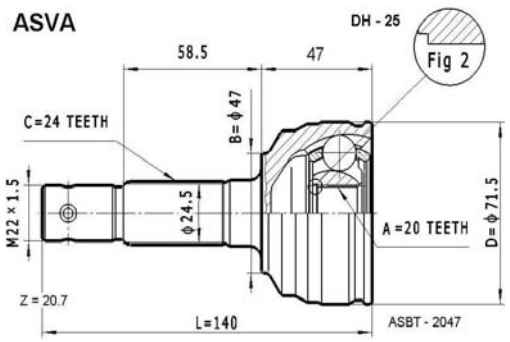

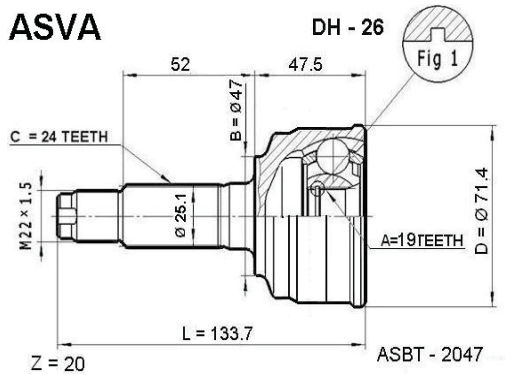

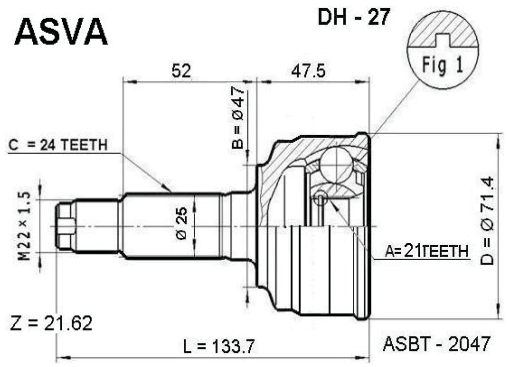

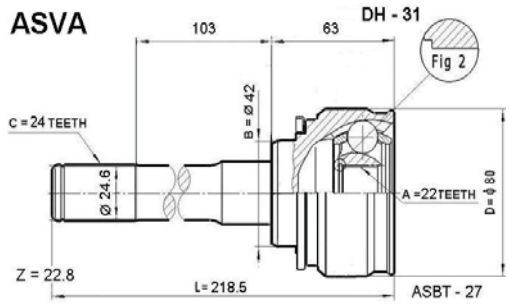

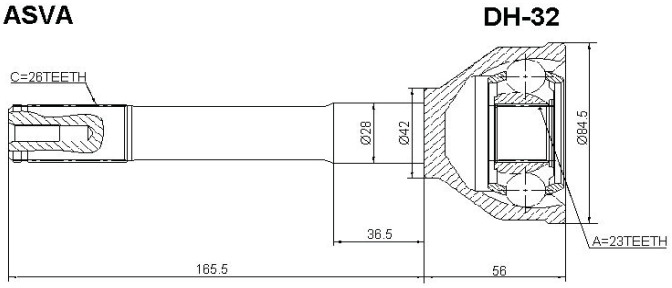

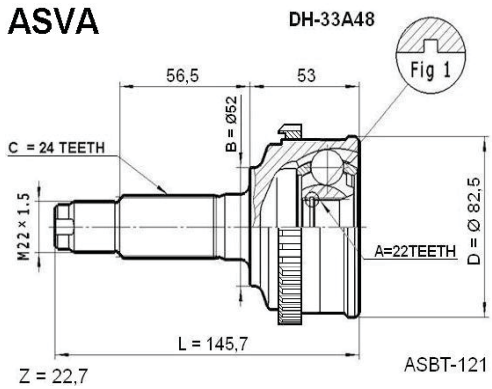

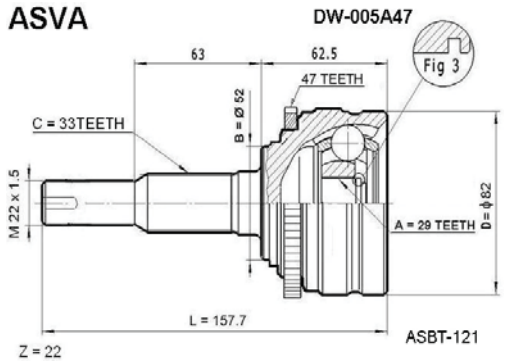

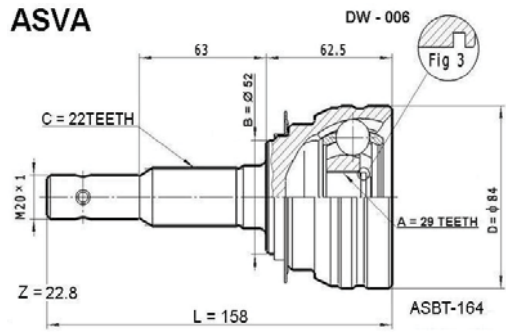

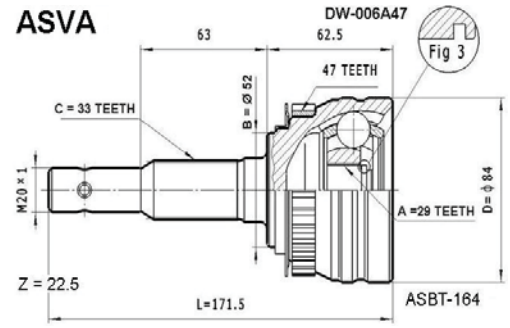

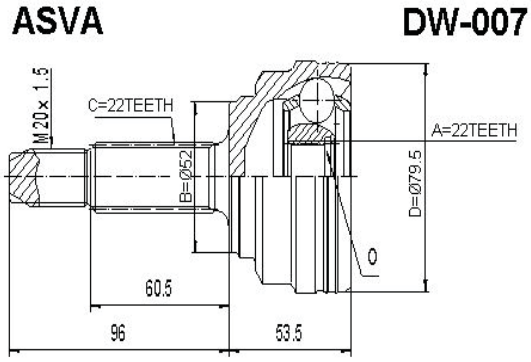

C.V. JOINT OUTER/ ШРУС НАРУЖНИЙ

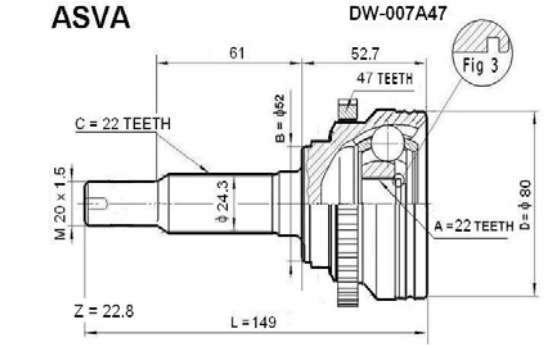

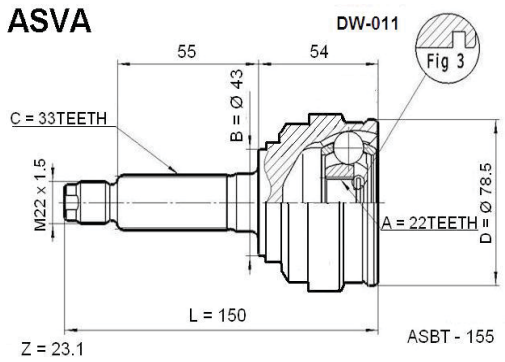

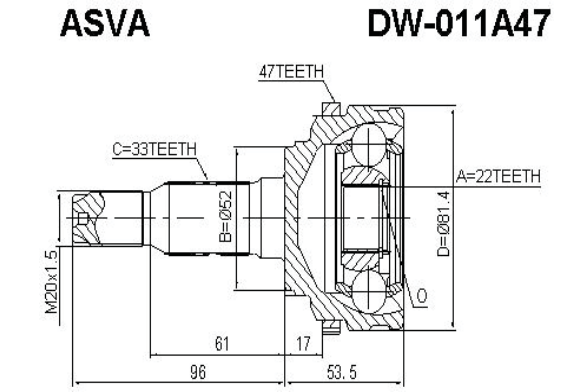

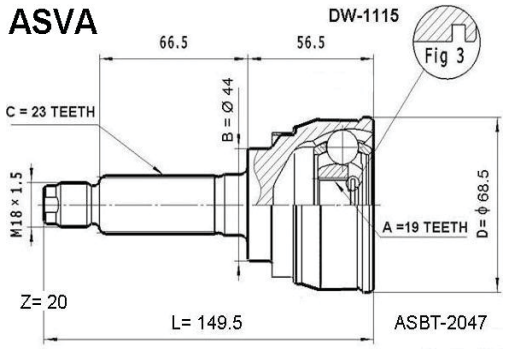

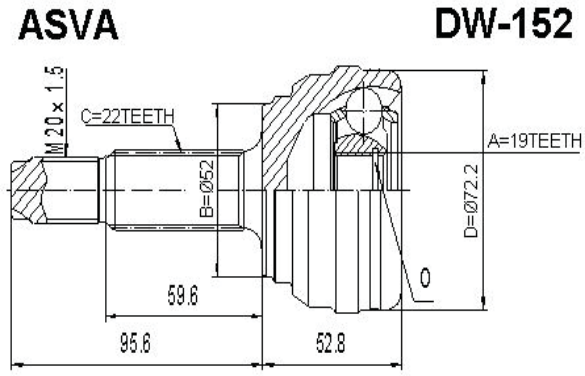

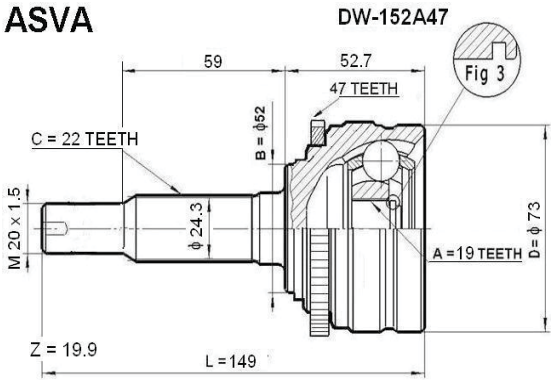

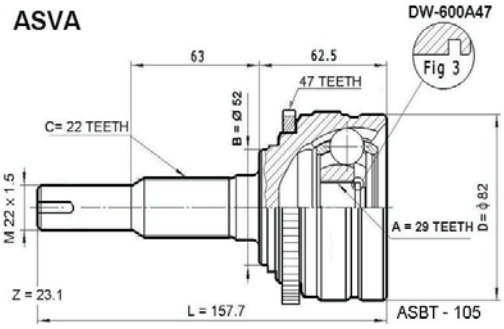

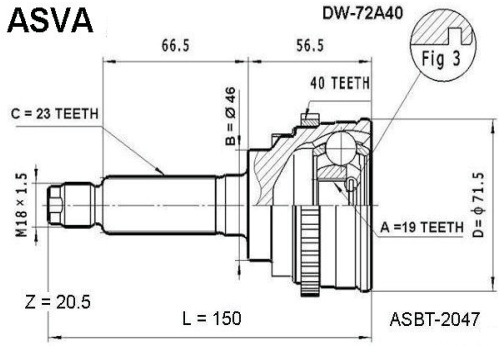

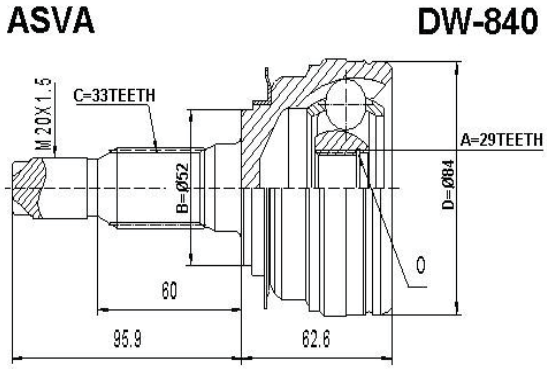

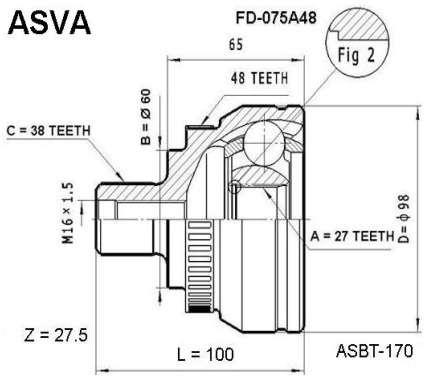

C.V. JOINT OUTER/ ШРУС НАРУЖНИЙ

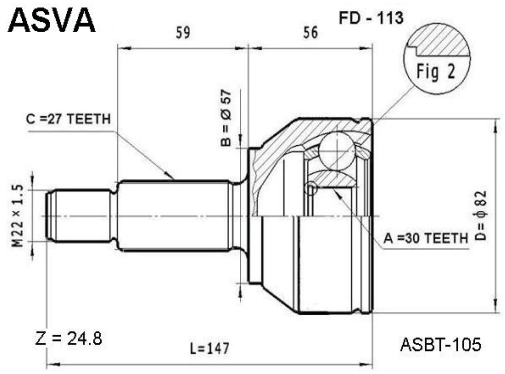

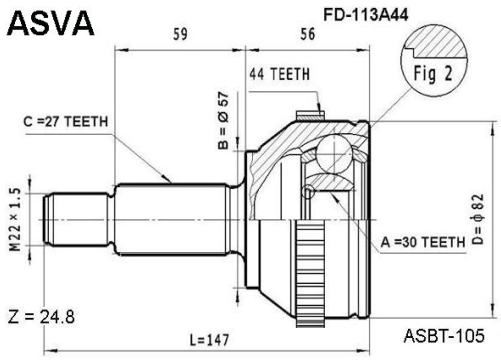

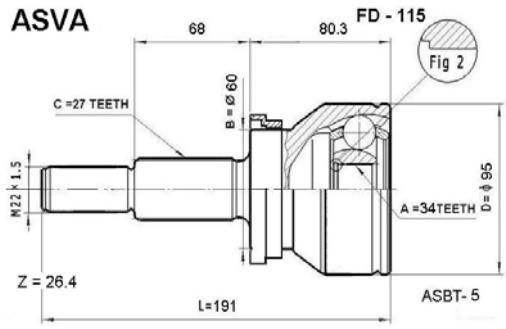

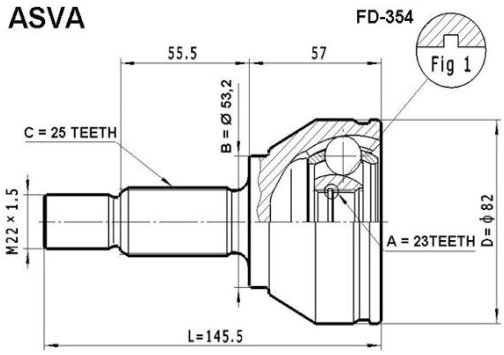

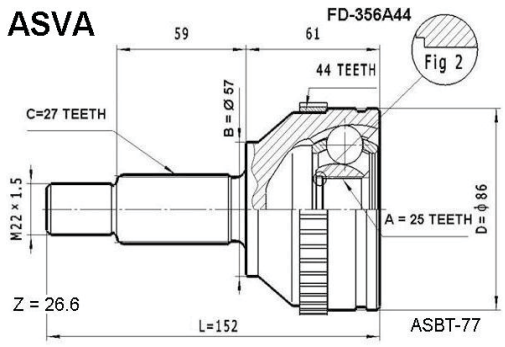

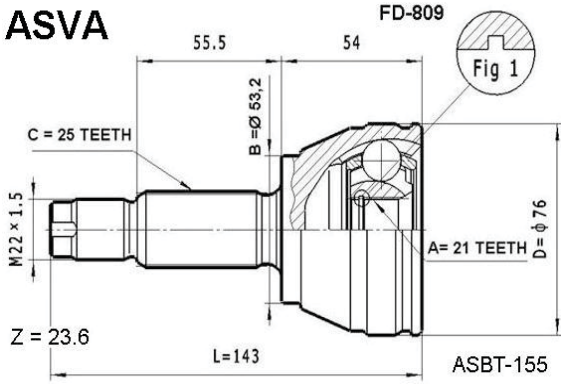

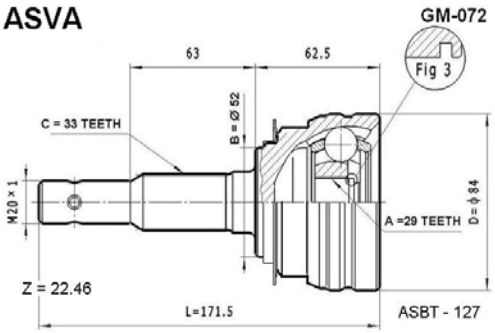

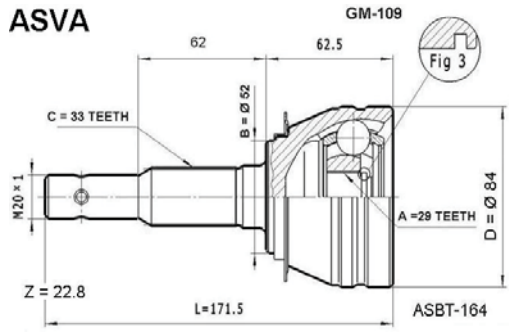

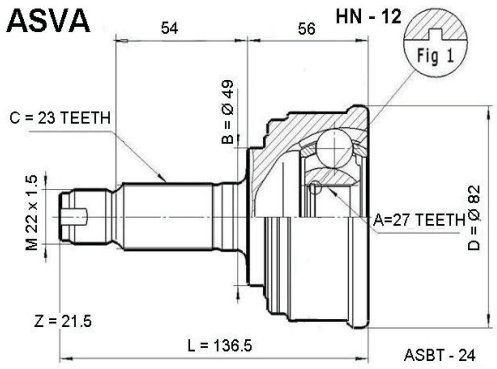

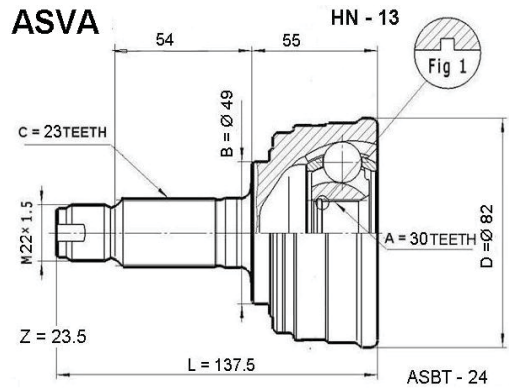

C.V. JOINT OUTER/ ШРУС НАРУЖНИЙ

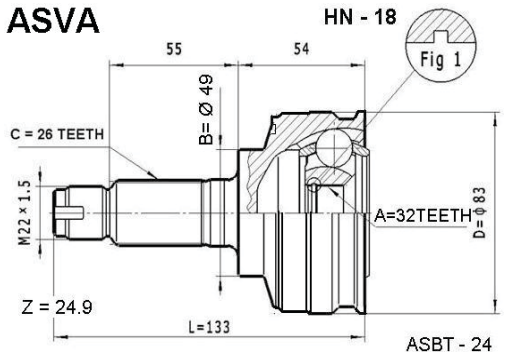

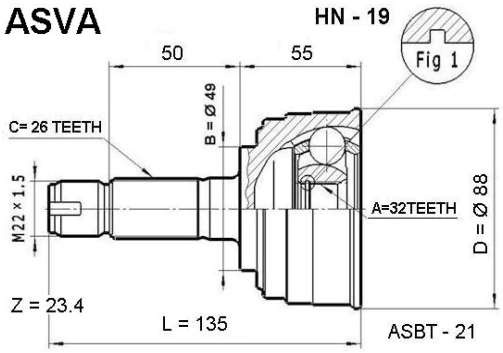

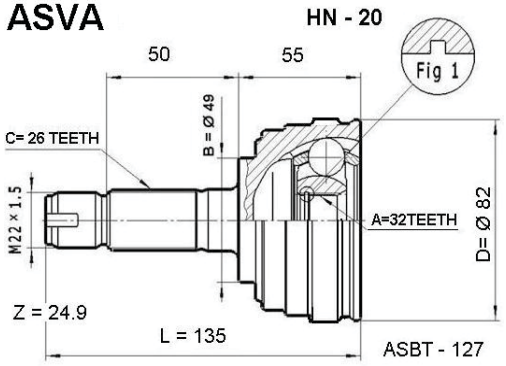

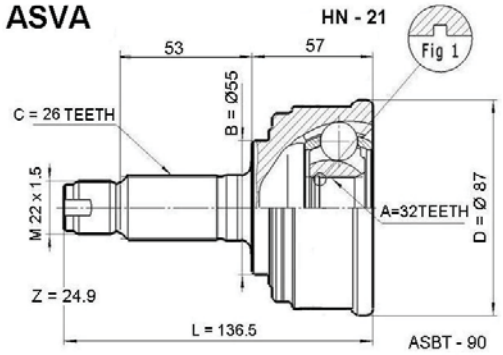

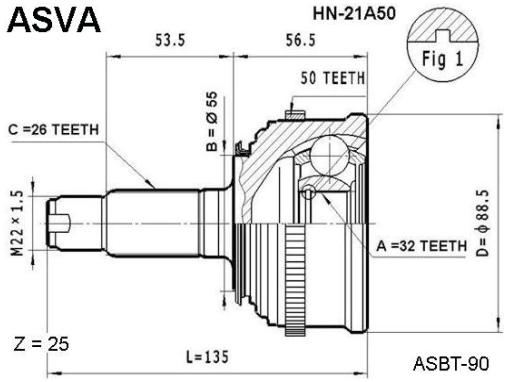

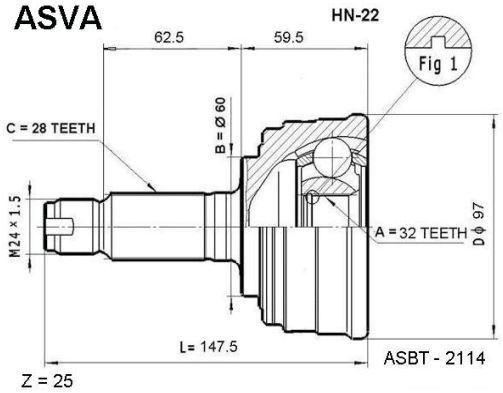

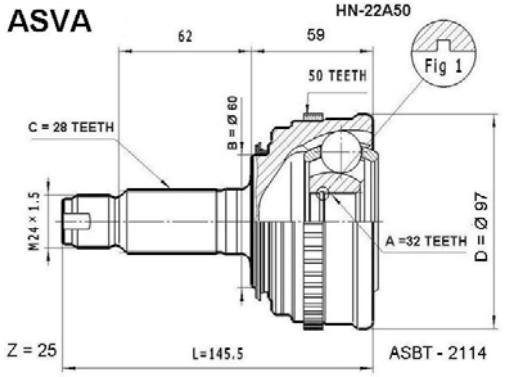

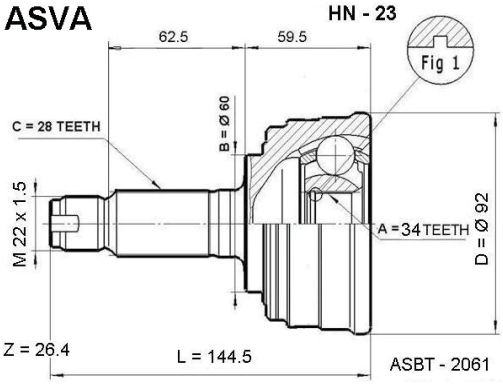

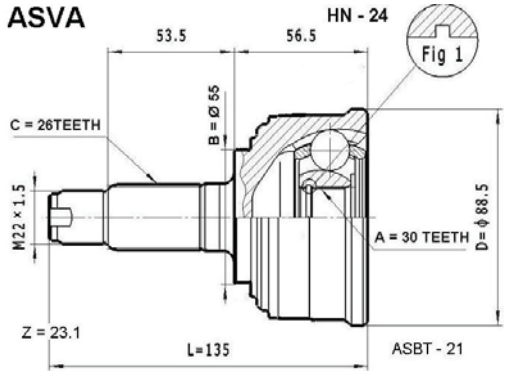

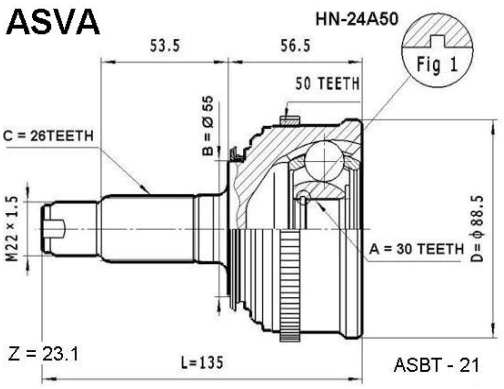

C.V. JOINT OUTER/ ШРУС НАРУЖНИЙ

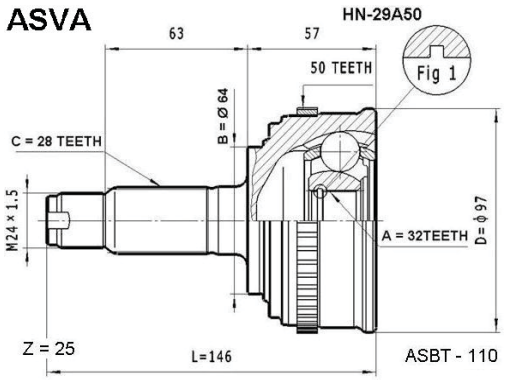

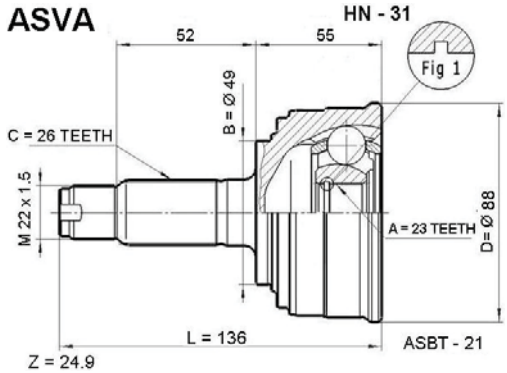

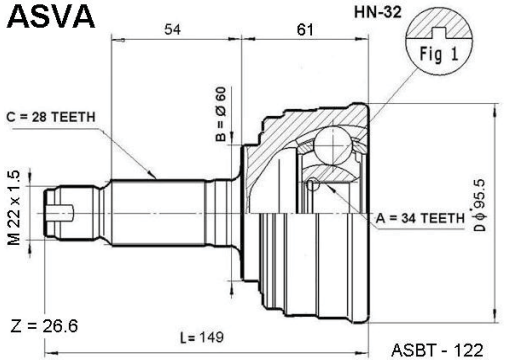

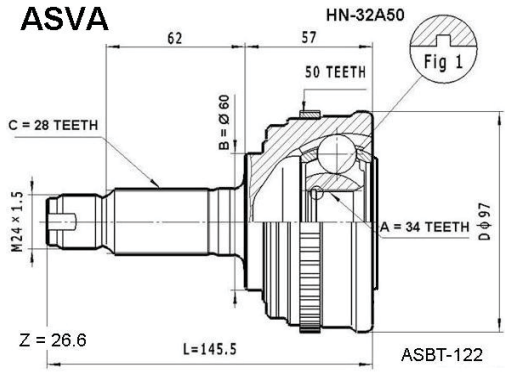

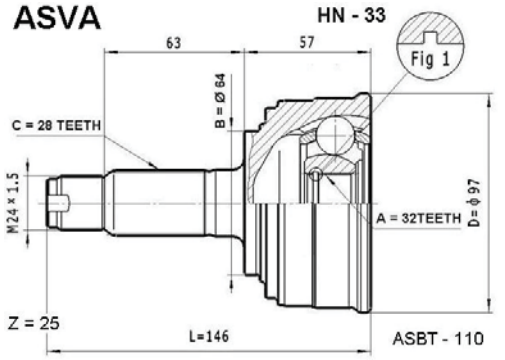

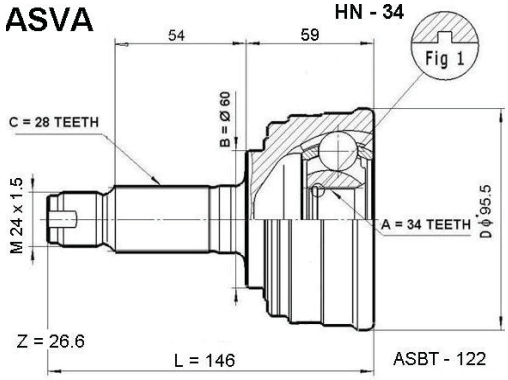

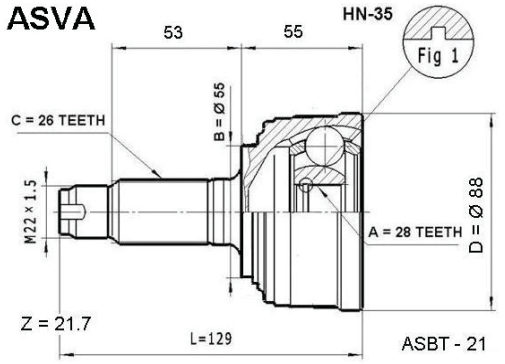

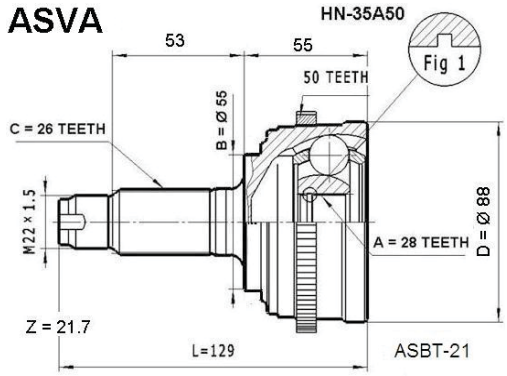

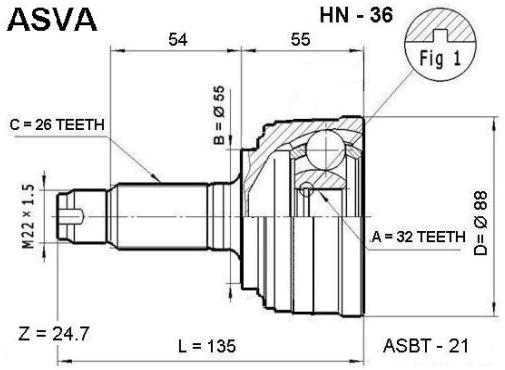

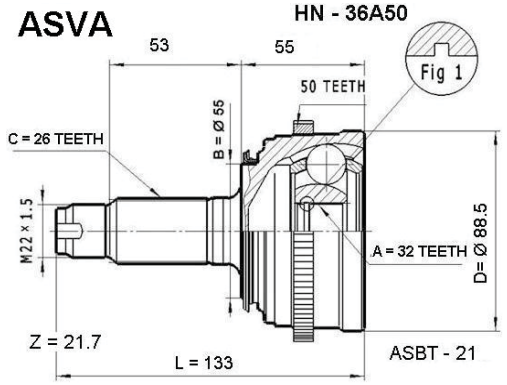

C.V. JOINT OUTER/ ШРУС НАРУЖНИЙ

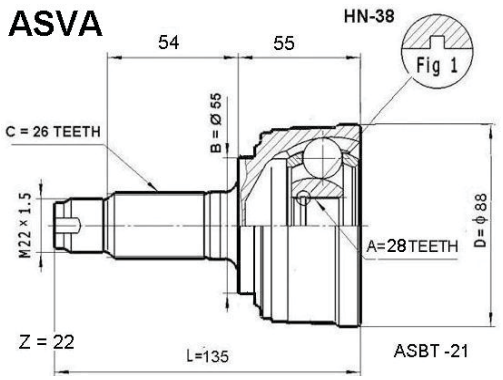

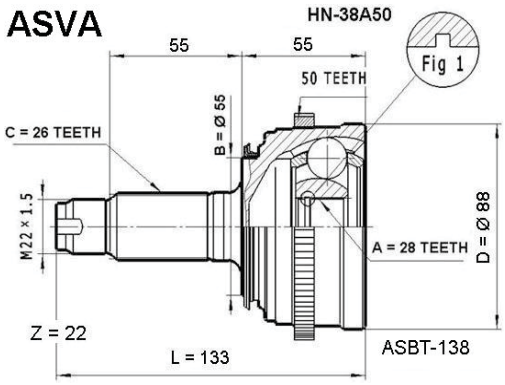

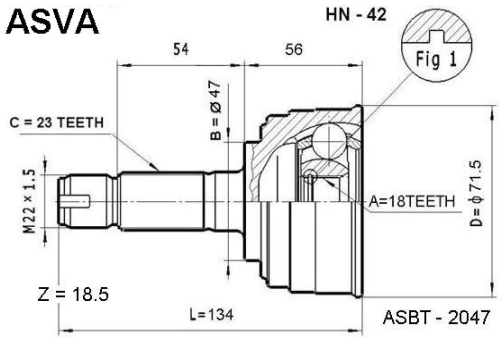

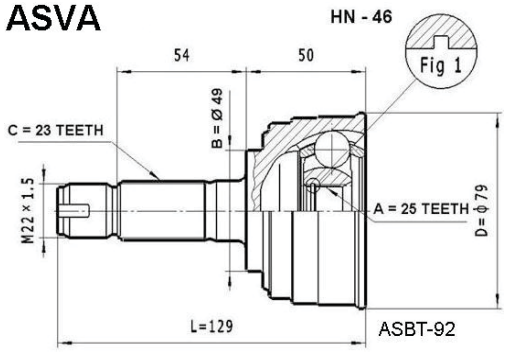

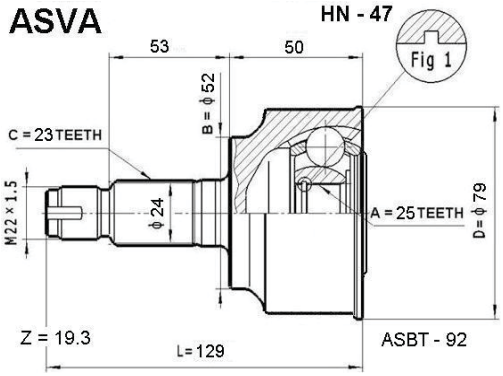

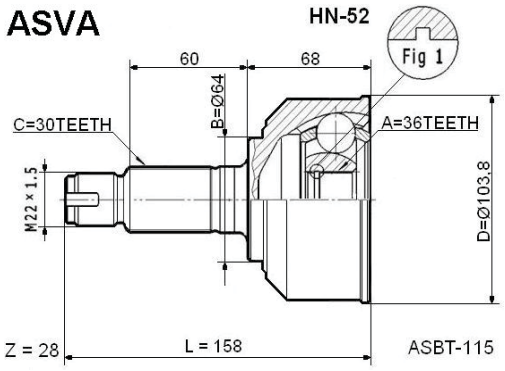

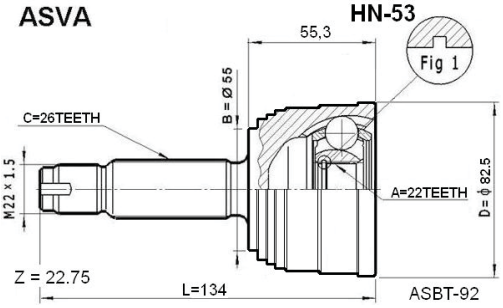

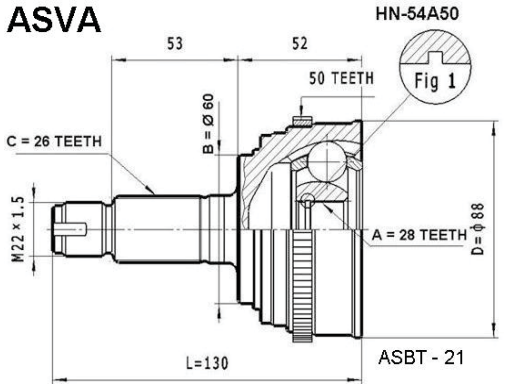

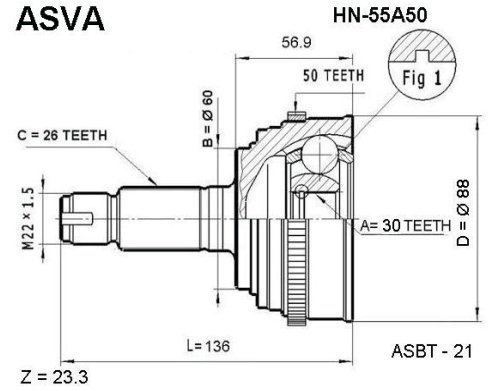

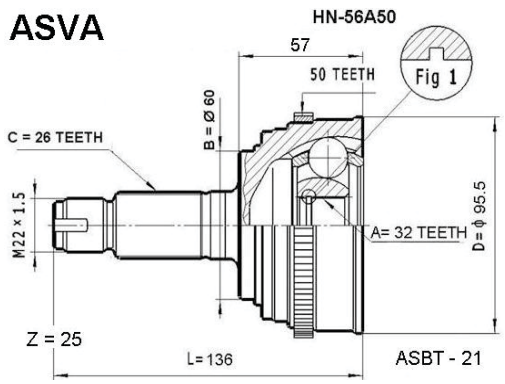

C.V. JOINT OUTER/ ШРУС НАРУЖНИЙ

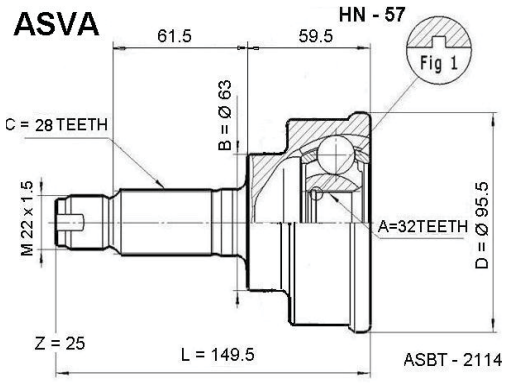

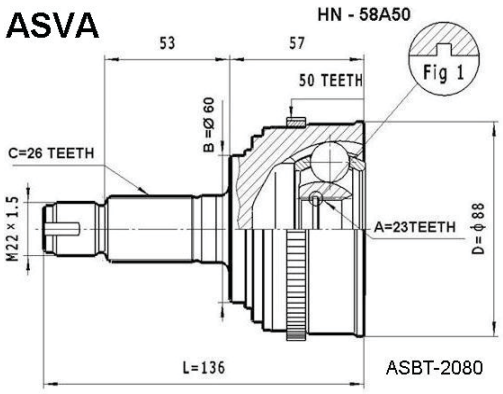

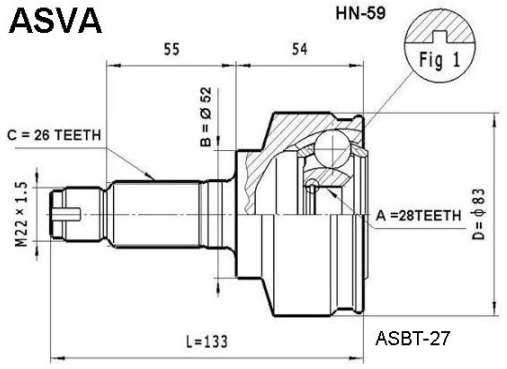

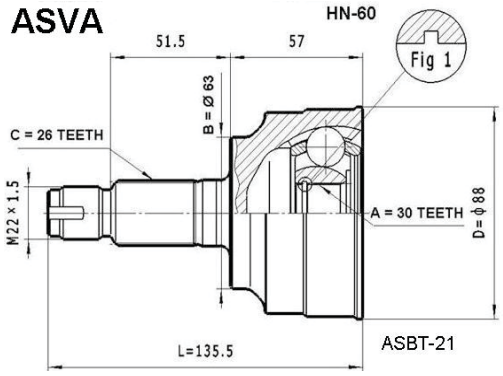

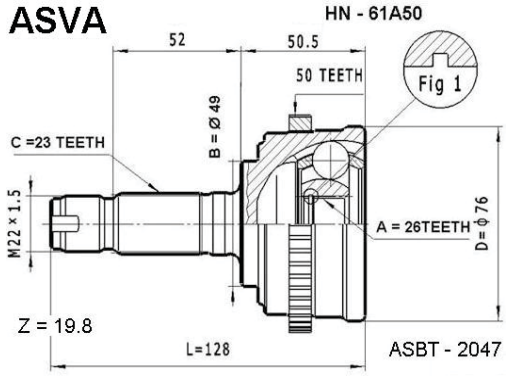

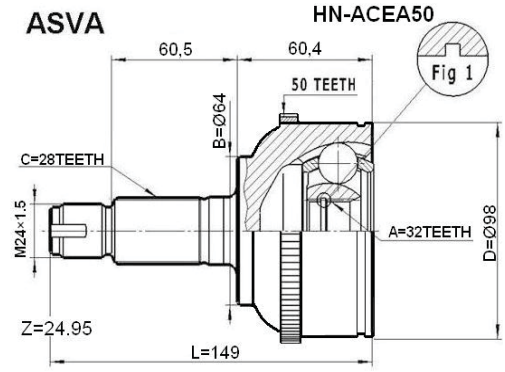

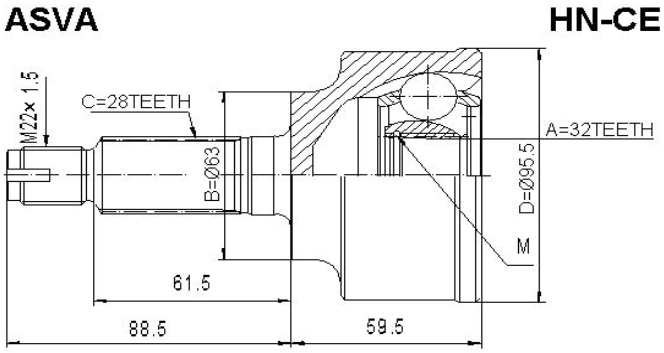

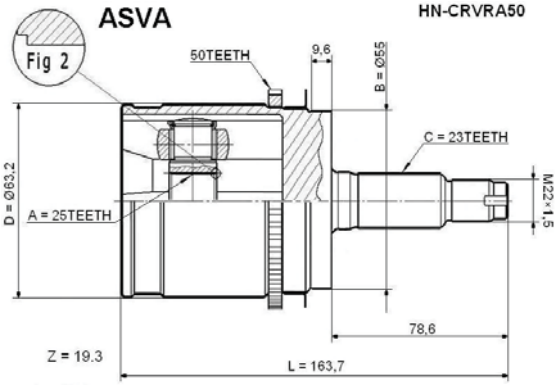

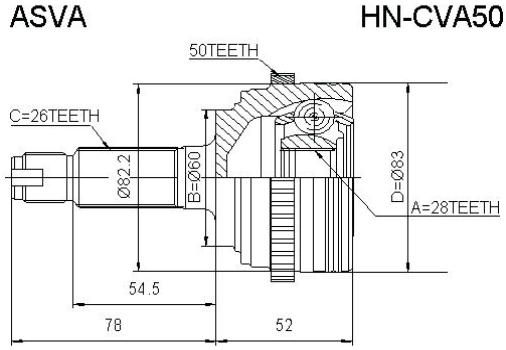

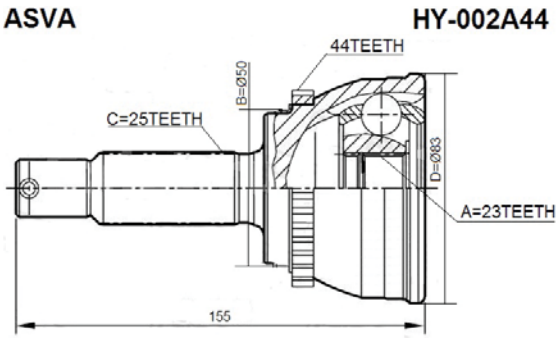

C.V. JOINT OUTER/ ШРУС НАРУЖНИЙ

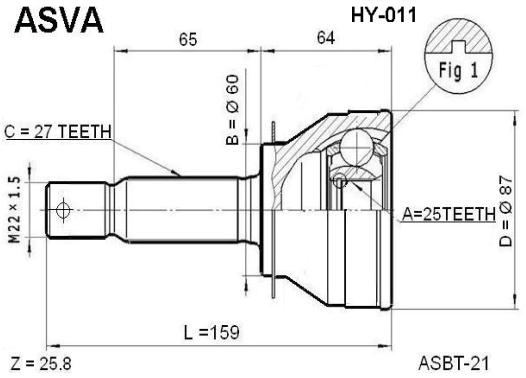

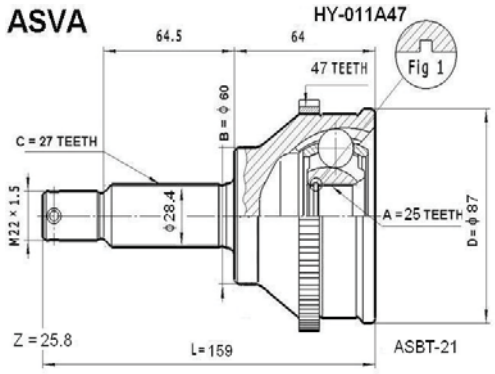

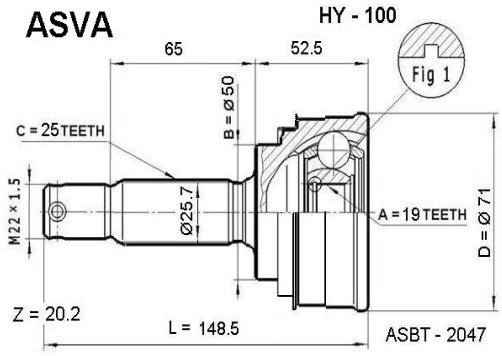

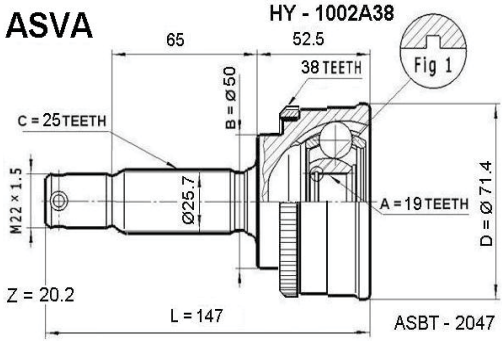

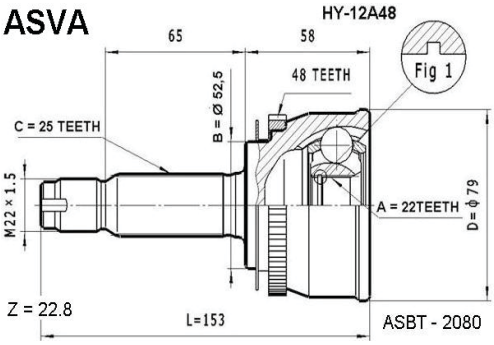

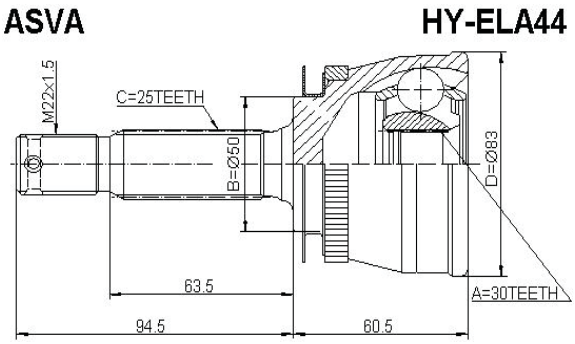

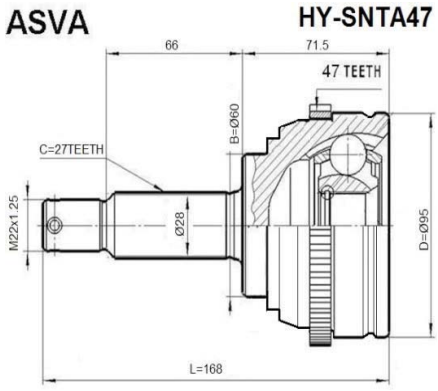

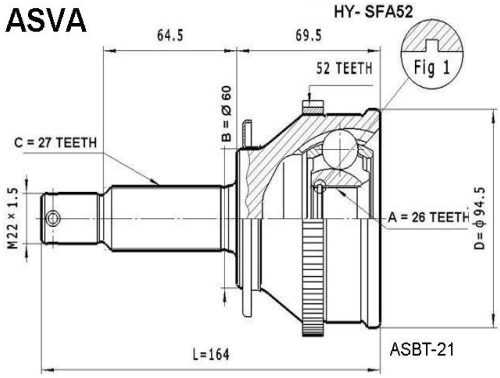

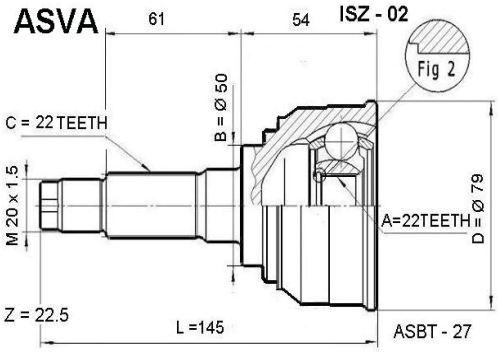

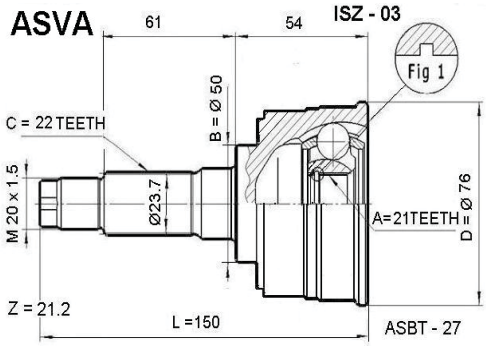

C.V. JOINT OUTER/ ШРУС НАРУЖНИЙ

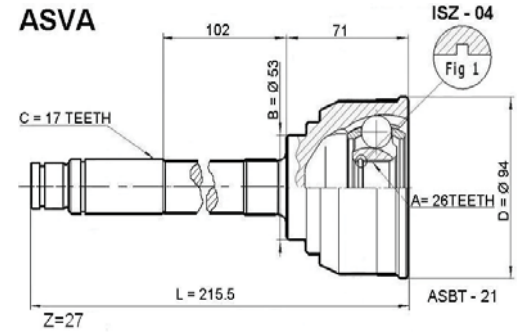

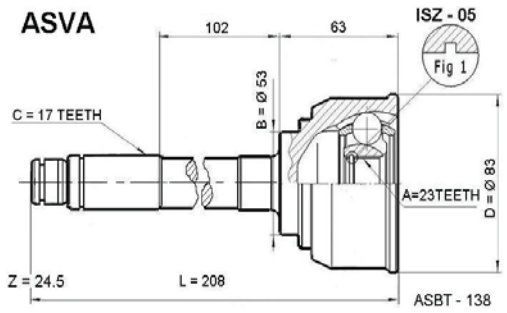

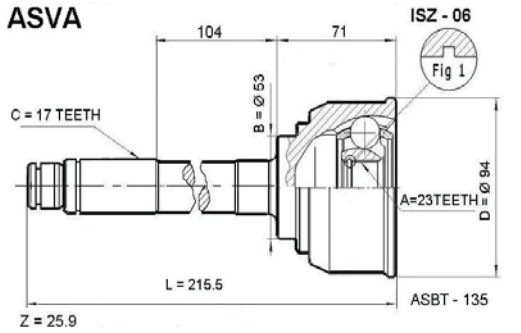

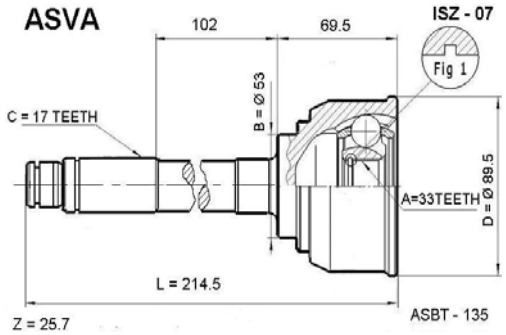

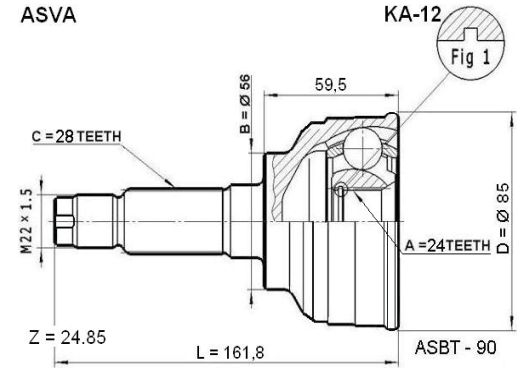

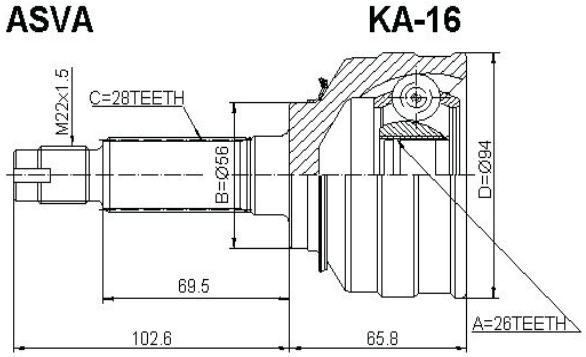

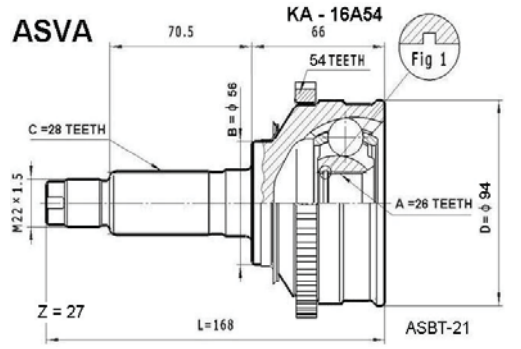

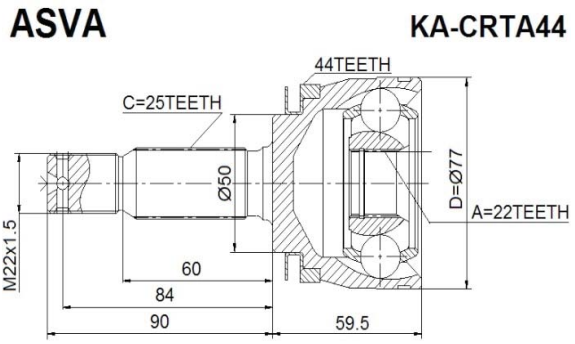

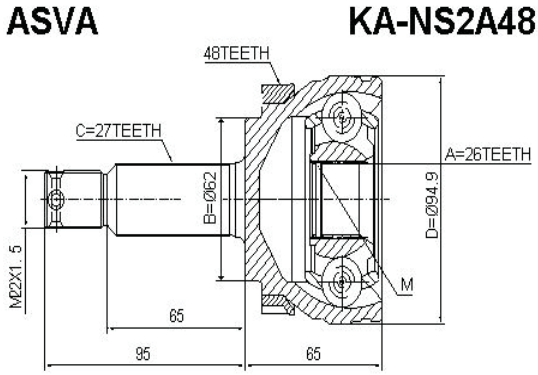

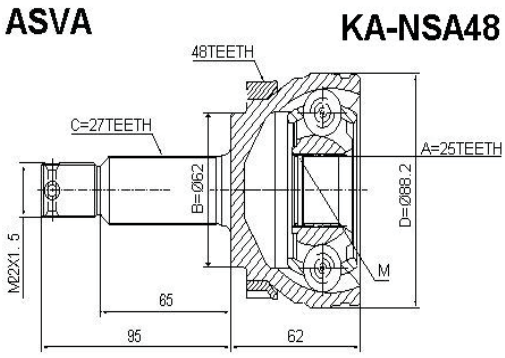

C.V. JOINT OUTER/ ШРУС НАРУЖНИЙ

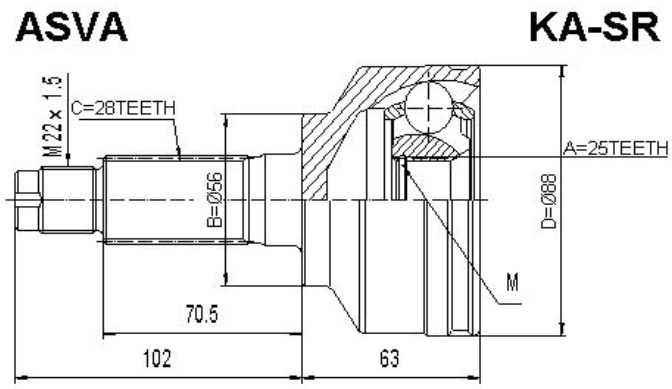

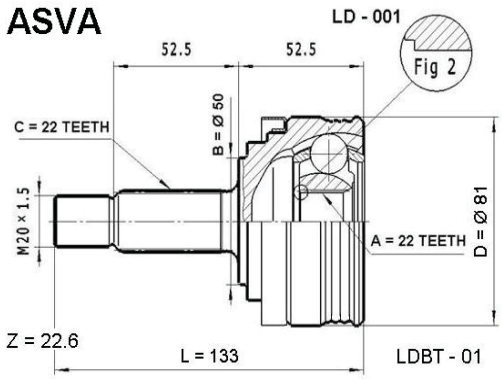

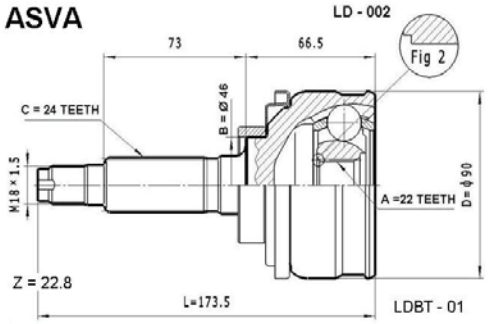

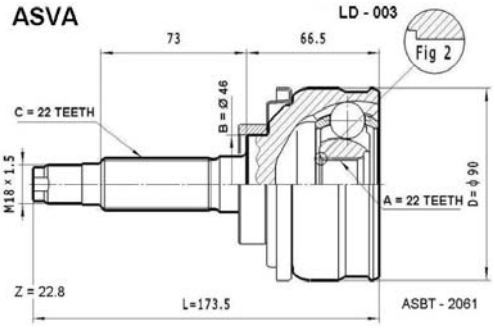

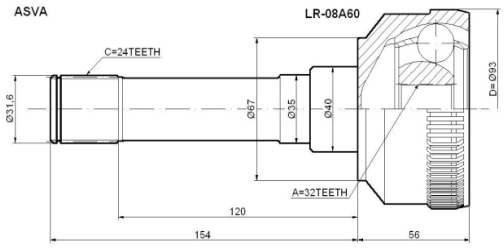

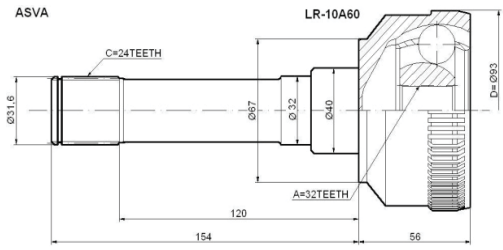

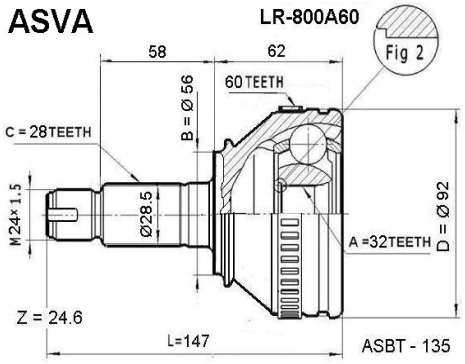

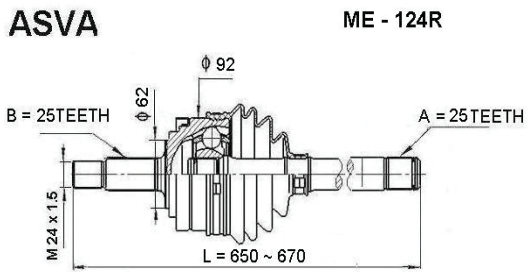

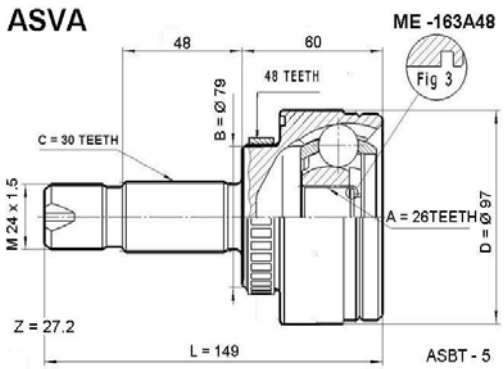

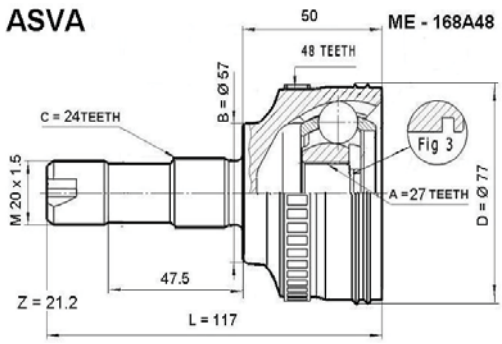

C.V. JOINT OUTER/ ШРУС НАРУЖНИЙ

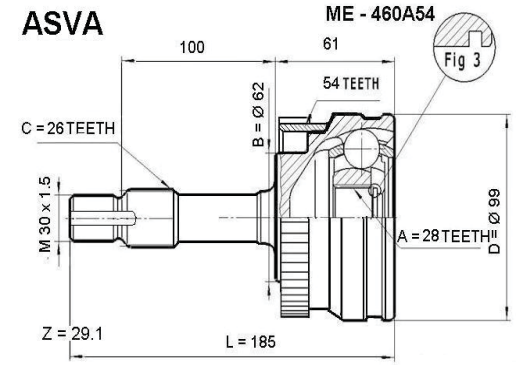

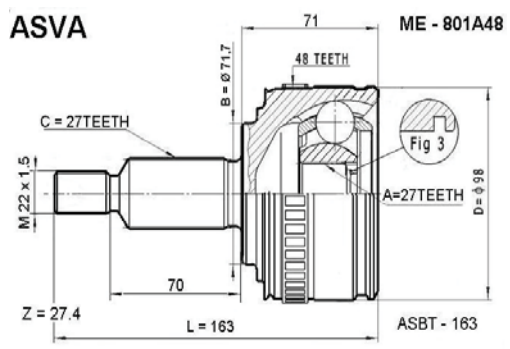

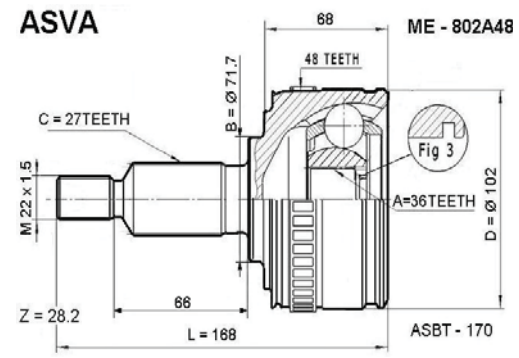

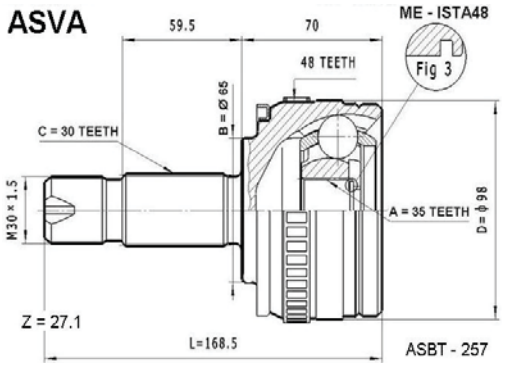

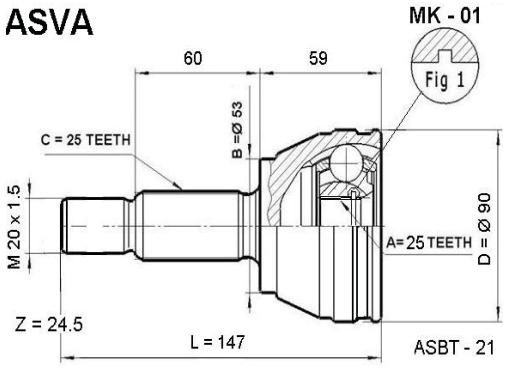

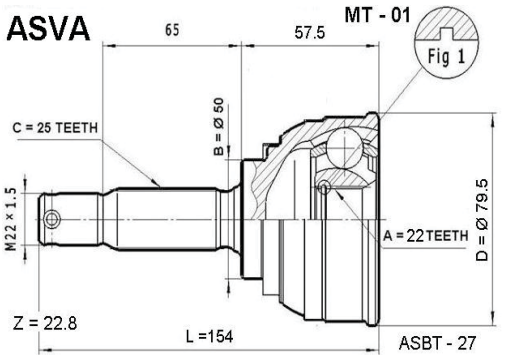

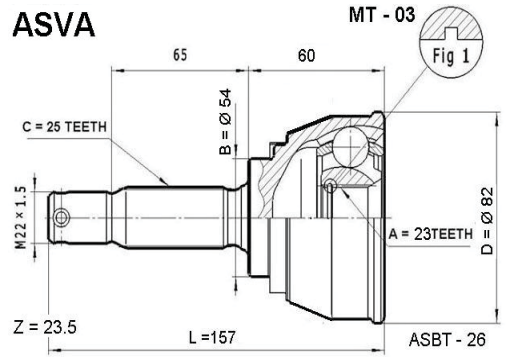

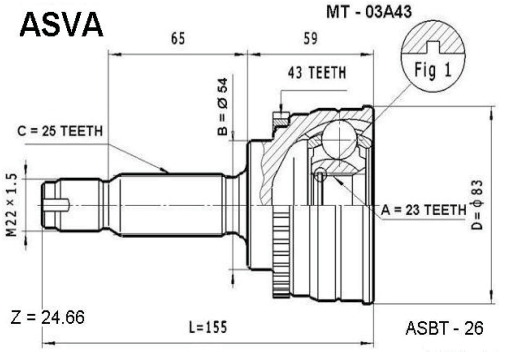

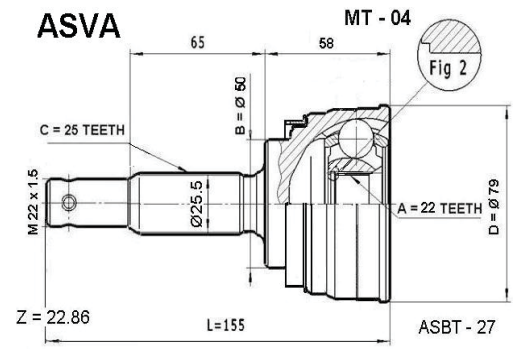

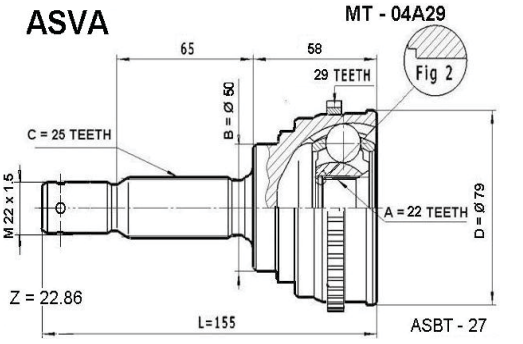

C.V. JOINT OUTER/ ШРУС НАРУЖНИЙ

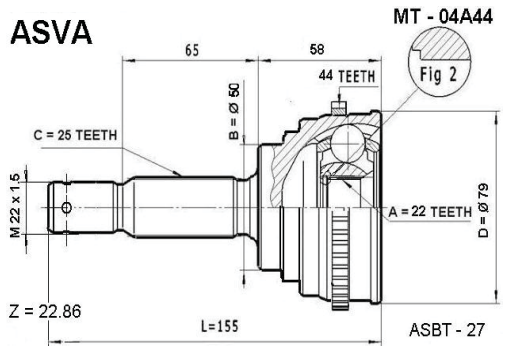

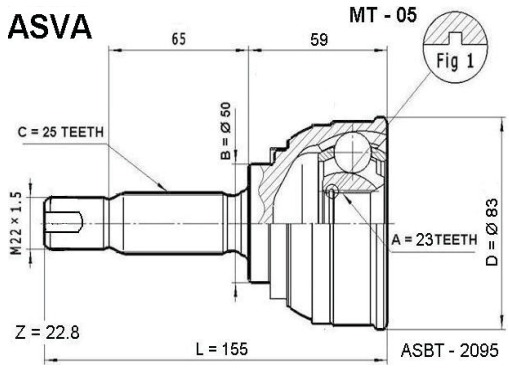

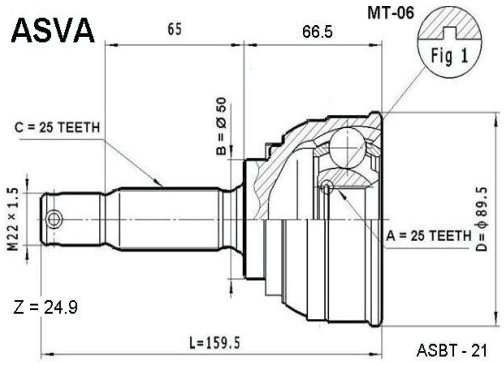

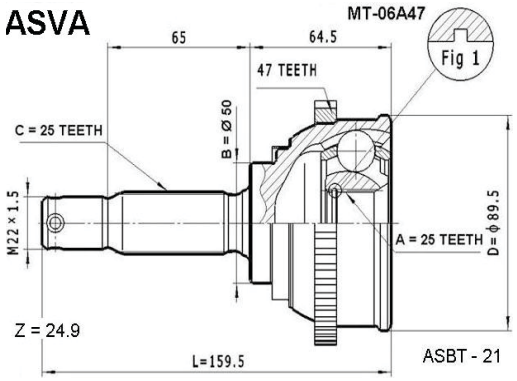

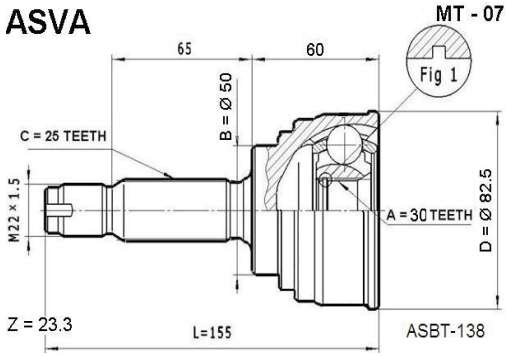

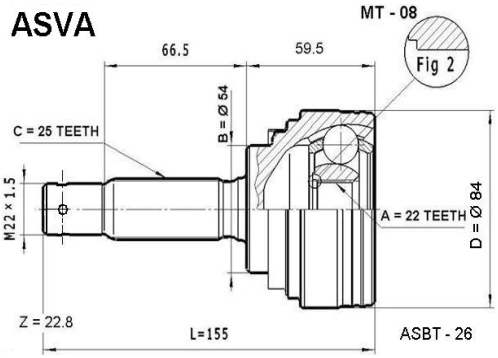

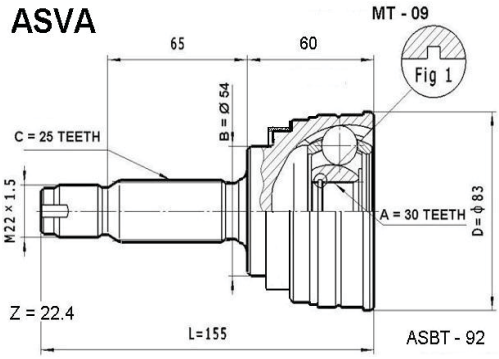

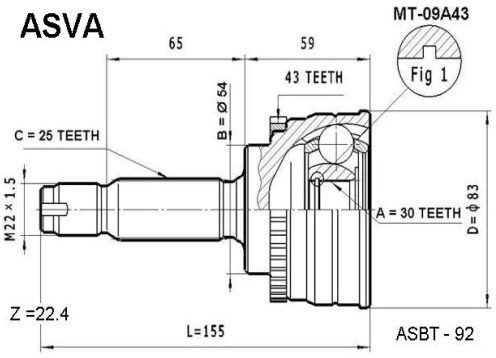

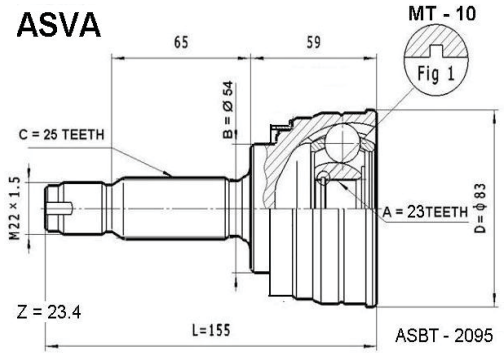

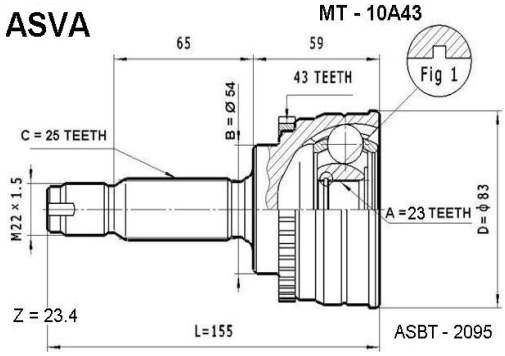

C.V. JOINT OUTER/ ШРУС НАРУЖНИЙ

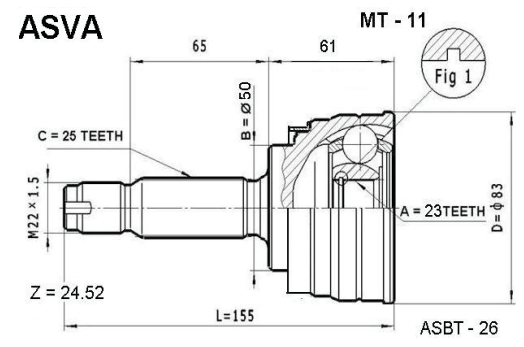

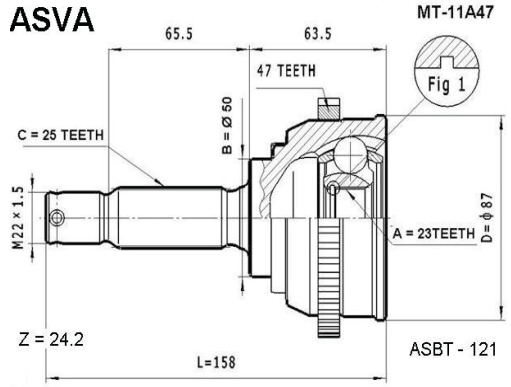

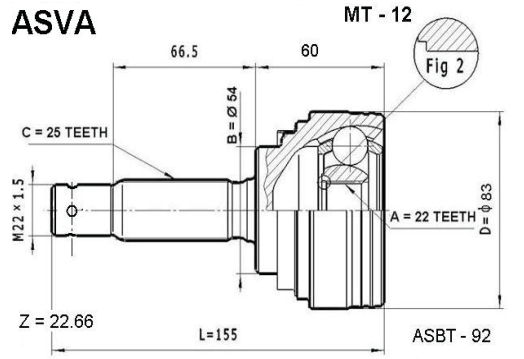

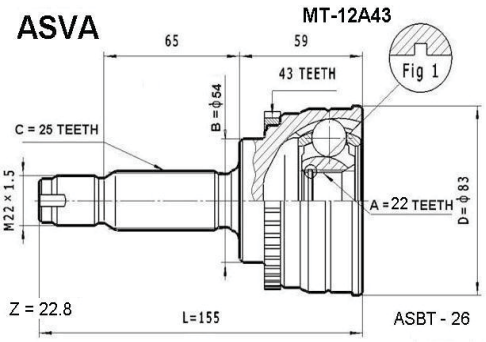

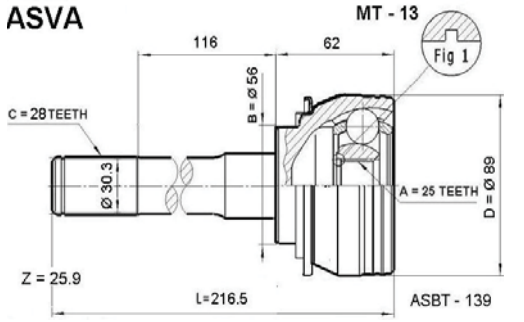

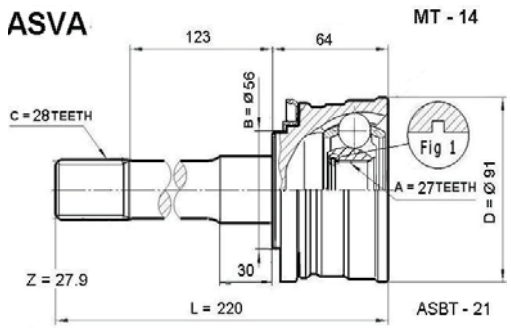

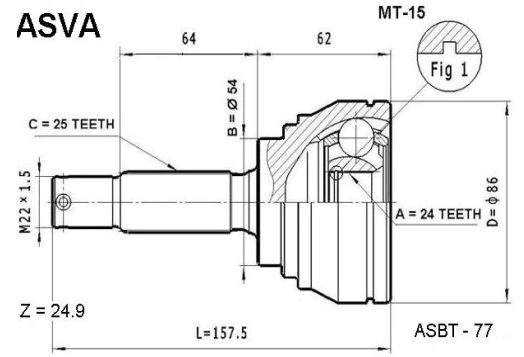

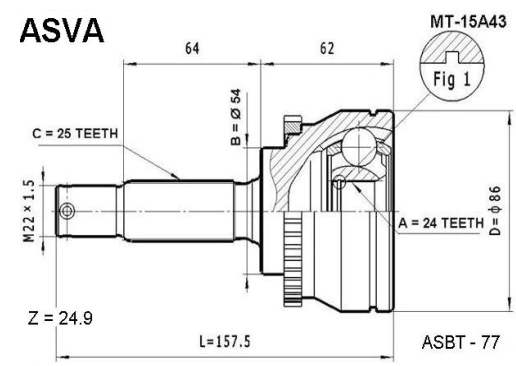

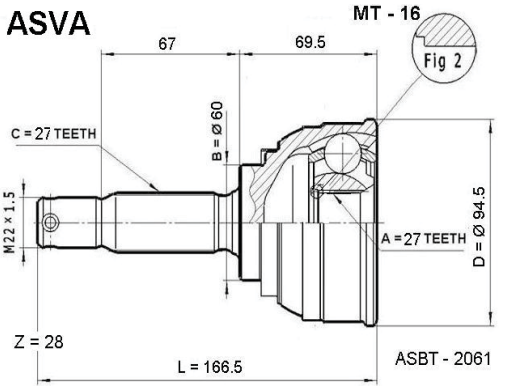

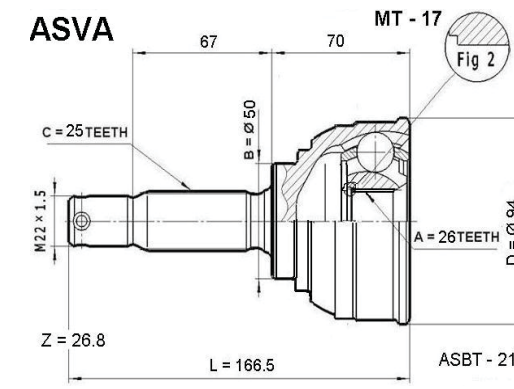

C.V. JOINT OUTER/ ШРУС НАРУЖНИЙ

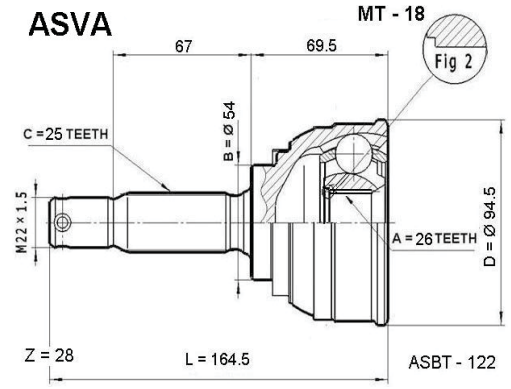

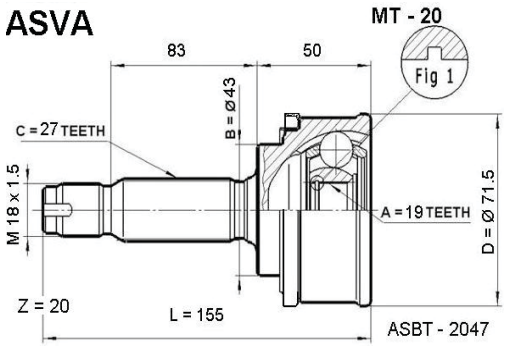

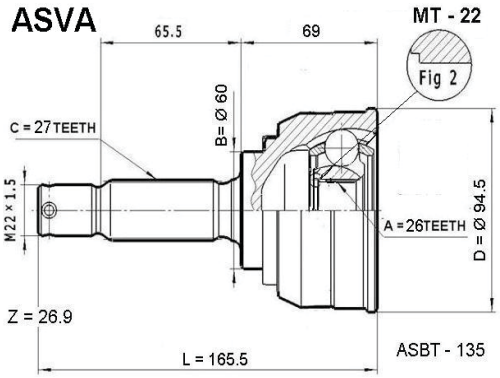

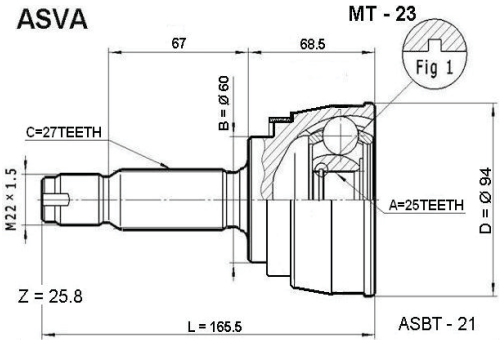

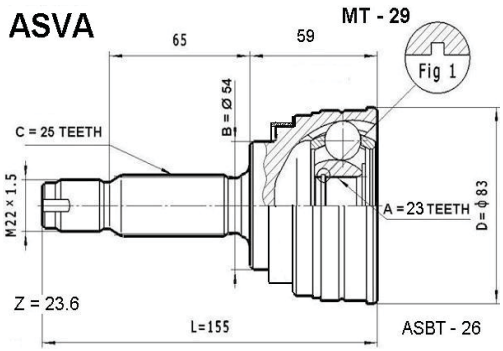

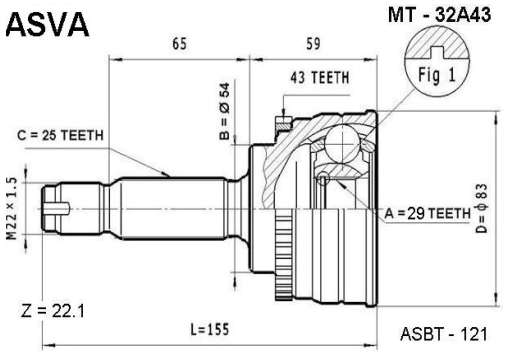

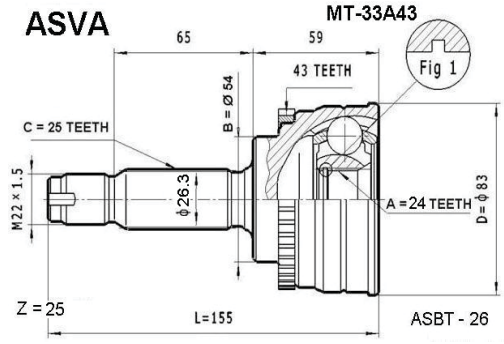

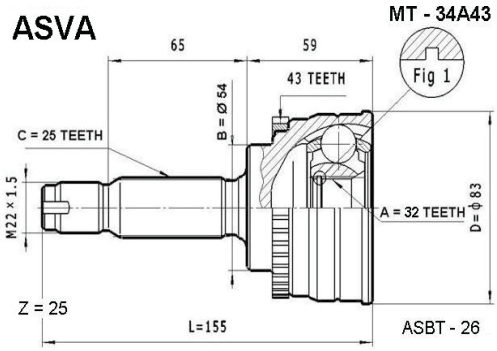

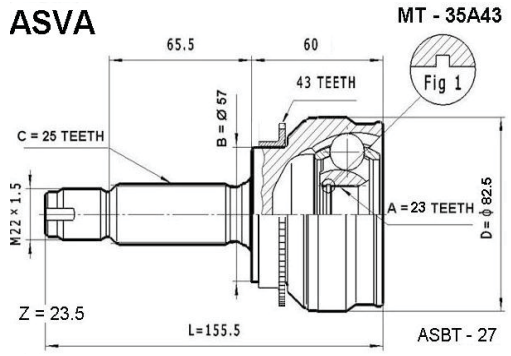

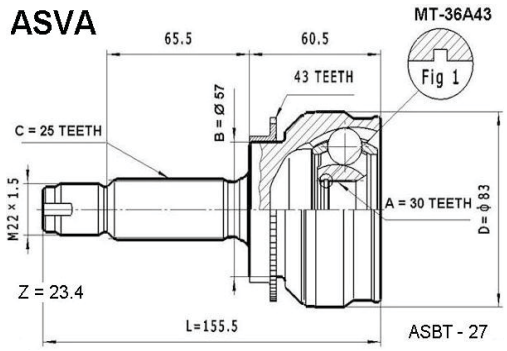

C.V. JOINT OUTER/ ШРУС НАРУЖНИЙ

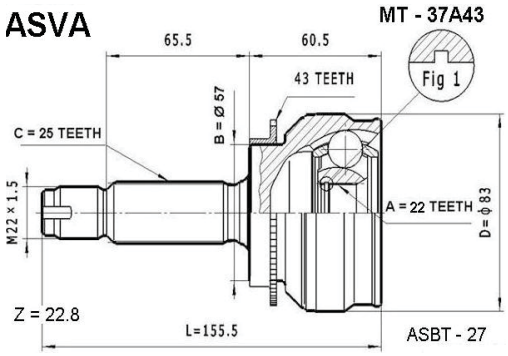

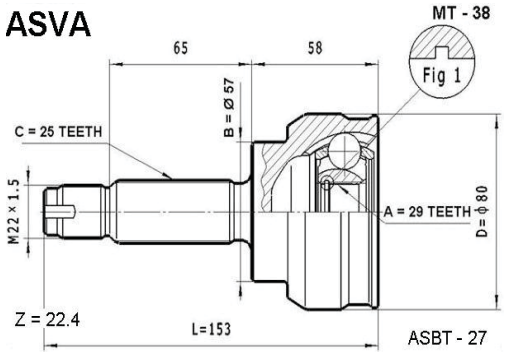

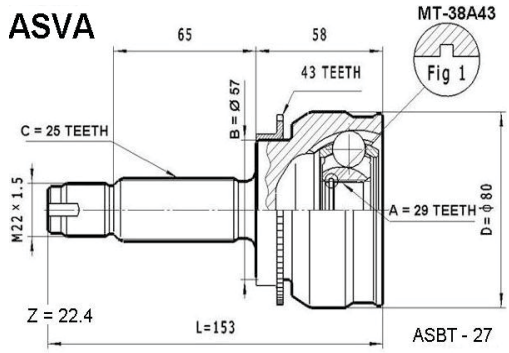

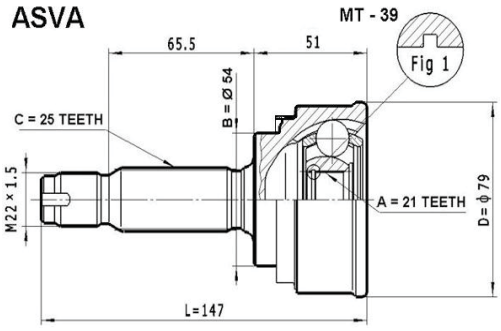

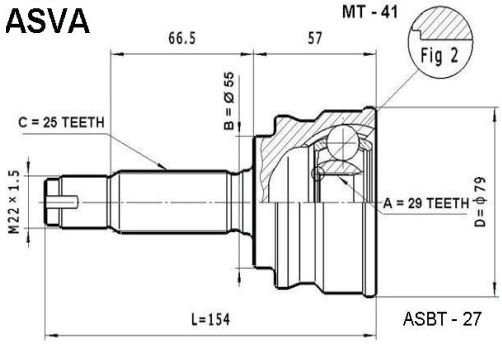

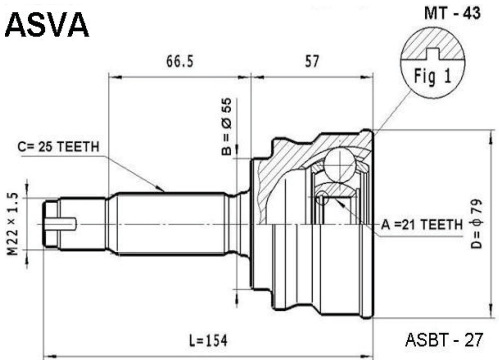

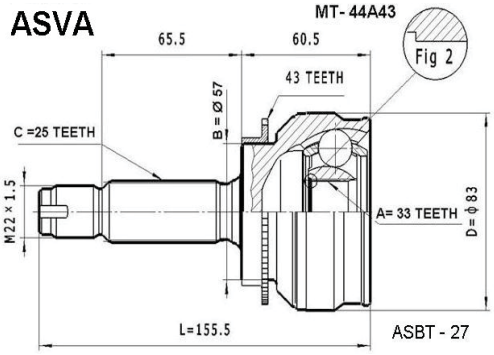

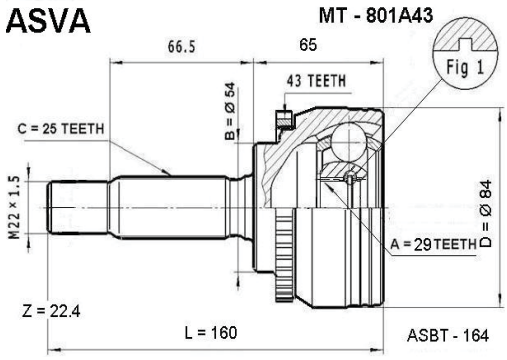

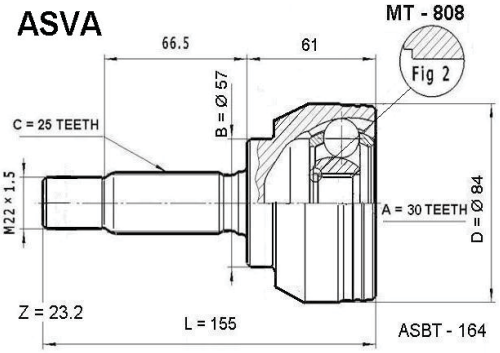

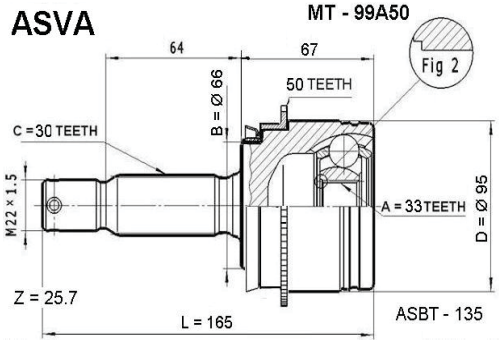

C.V. JOINT OUTER/ ШРУС НАРУЖНИЙ

ASVA **MT-CW5**

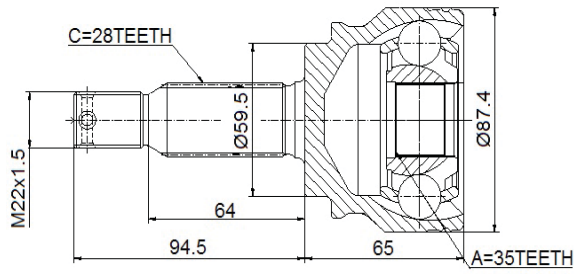

ASVA **MT-CY2**

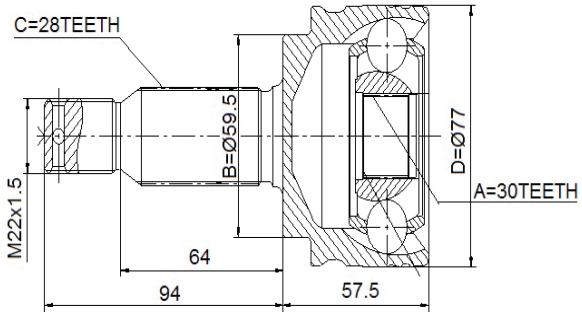

ASVA **MT-CY3**

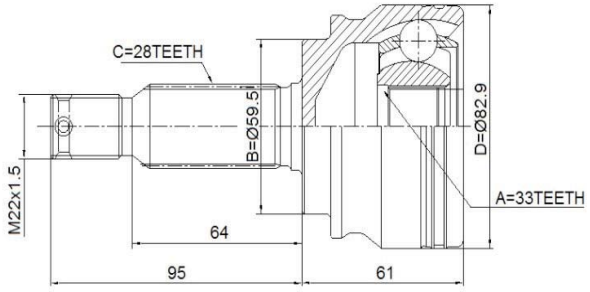

ASVA **MT-H76A43**

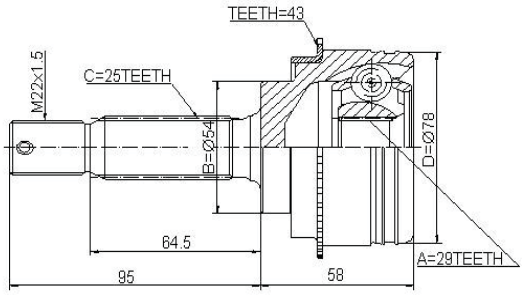

ASVA **MT-KB4A47**

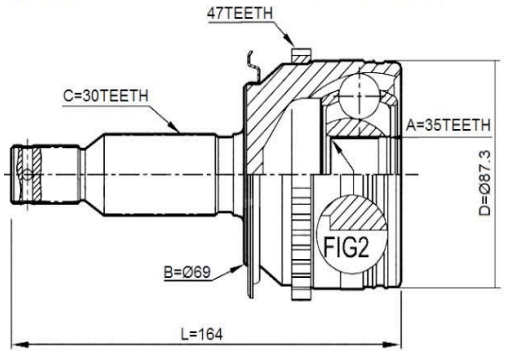

ASVA **MT - N84A43**

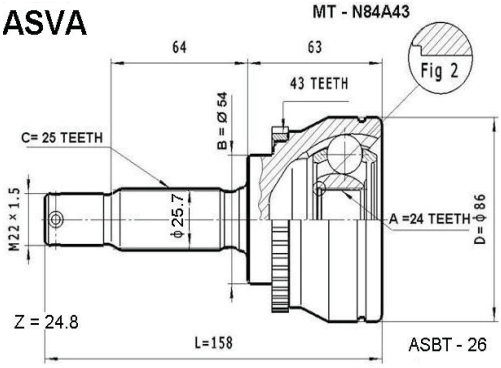

ASVA **MT-N94A43**

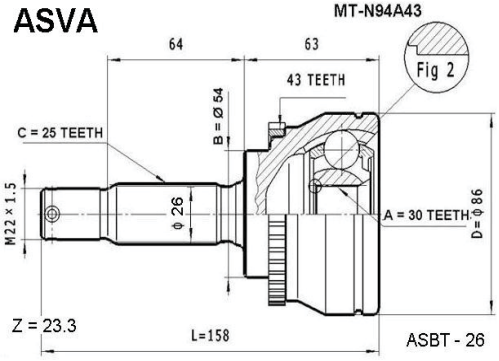

ASVA **MT-Z36**

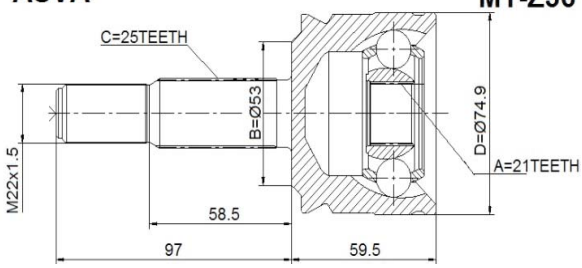

ASVA **MT - PNA43**

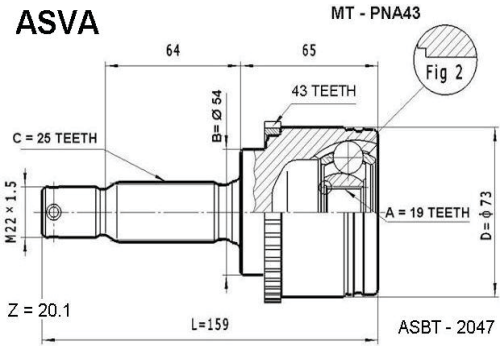

ASVA **MZ - 01**

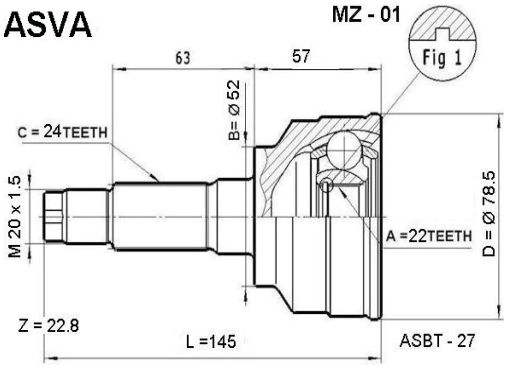

C.V. JOINT OUTER/ ШРУС НАРУЖНИЙ

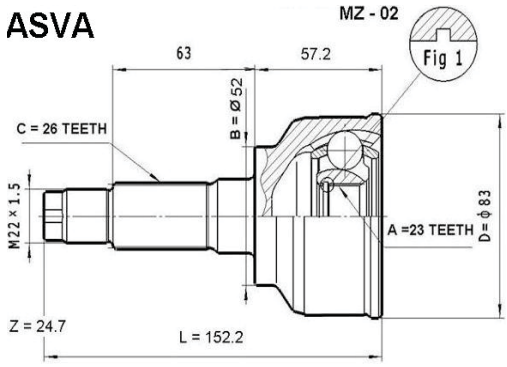

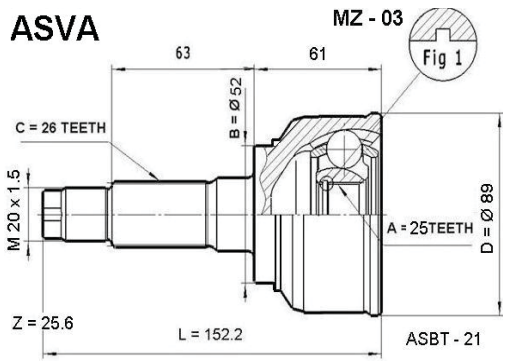

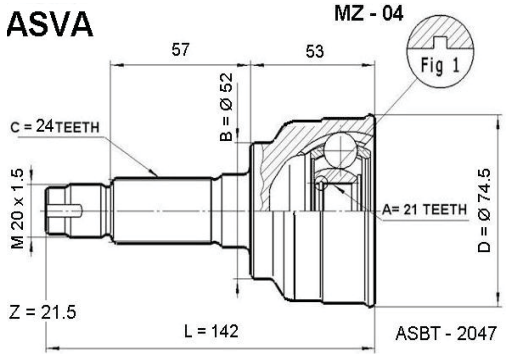

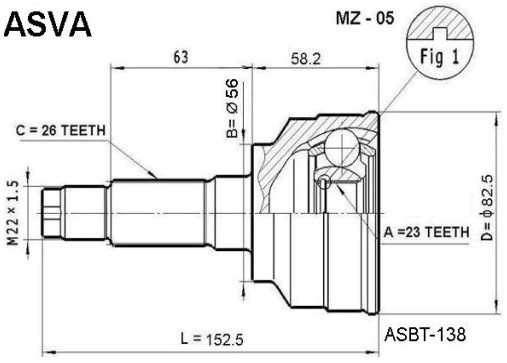

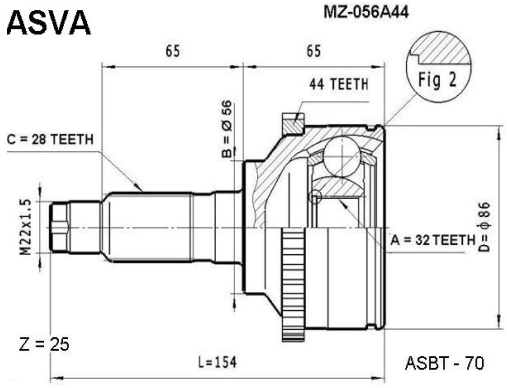

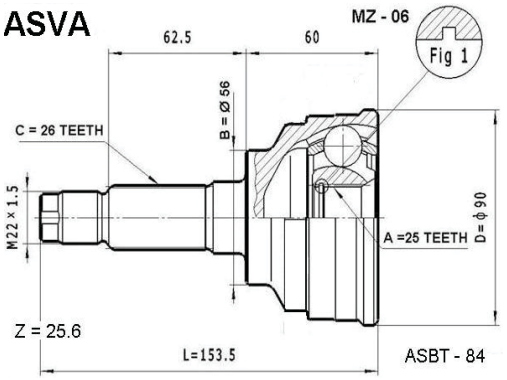

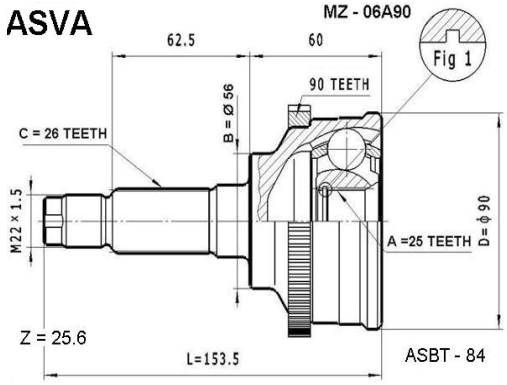

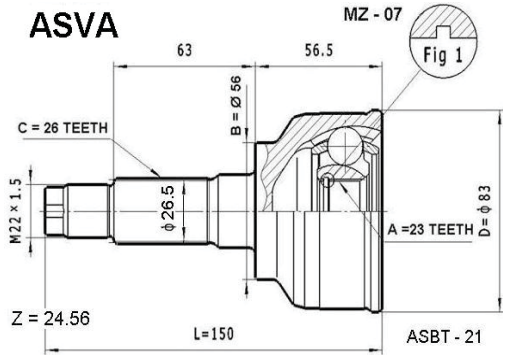

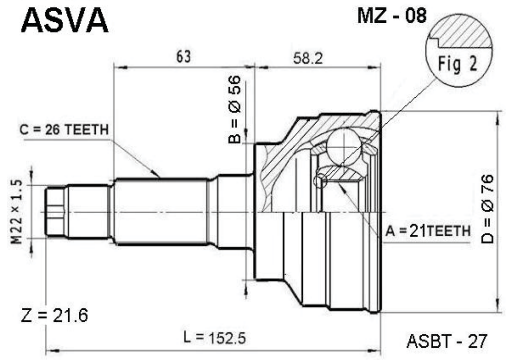

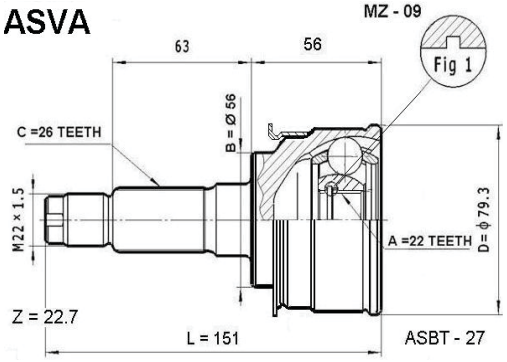

C.V. JOINT OUTER/ ШРУС НАРУЖНИЙ

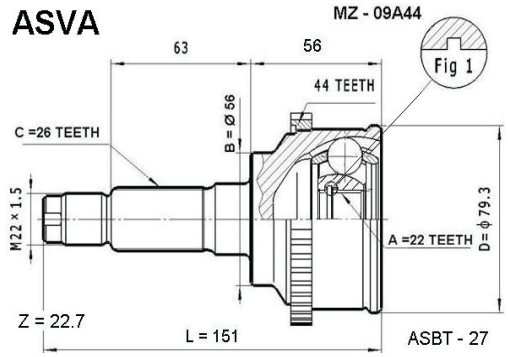

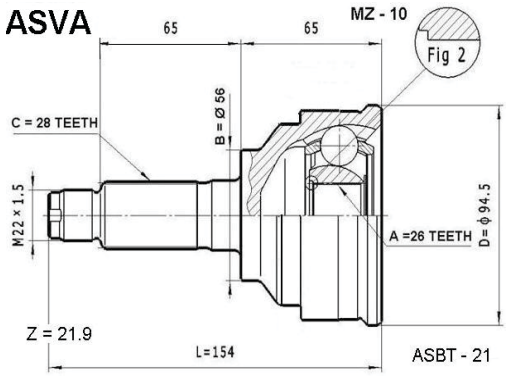

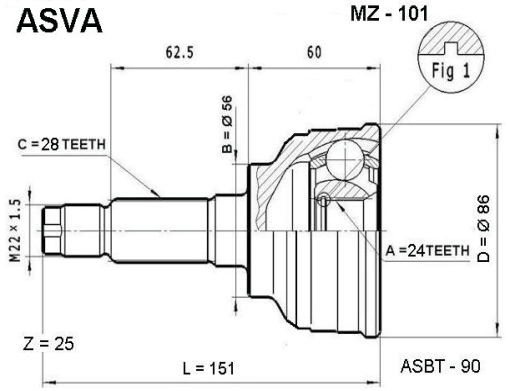

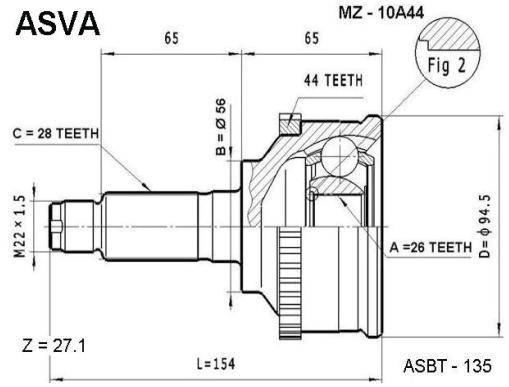

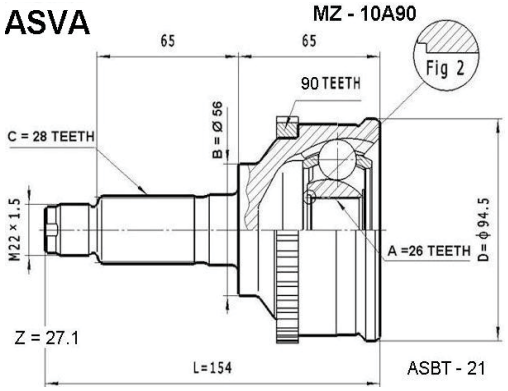

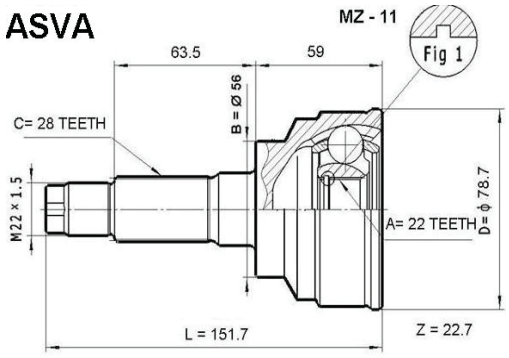

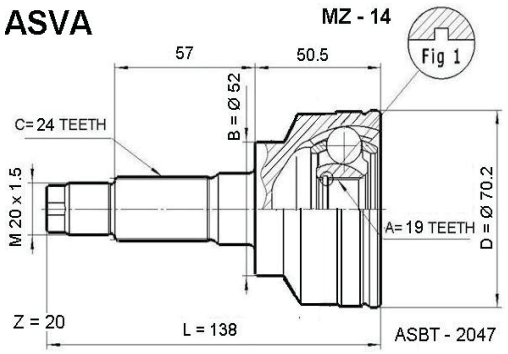

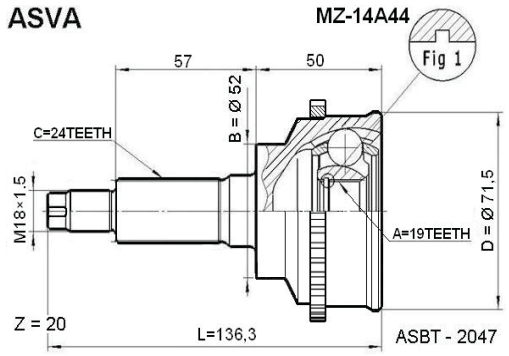

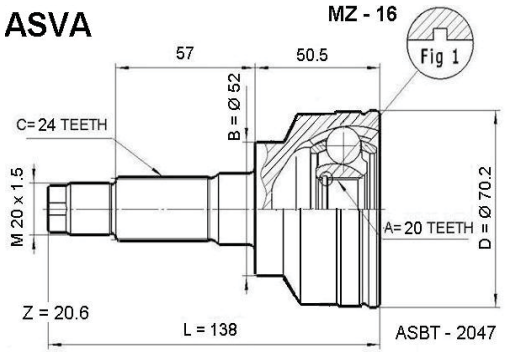

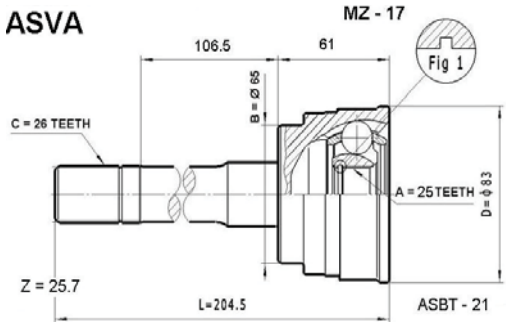

C.V. JOINT OUTER/ ШРУС НАРУЖНИЙ

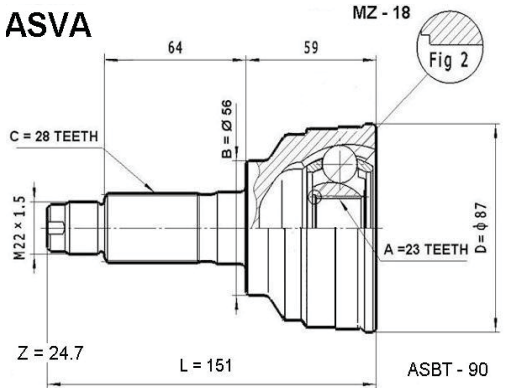

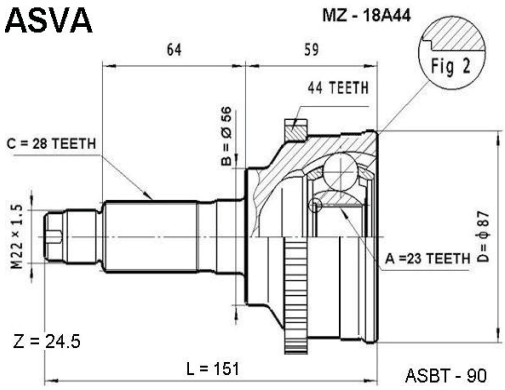

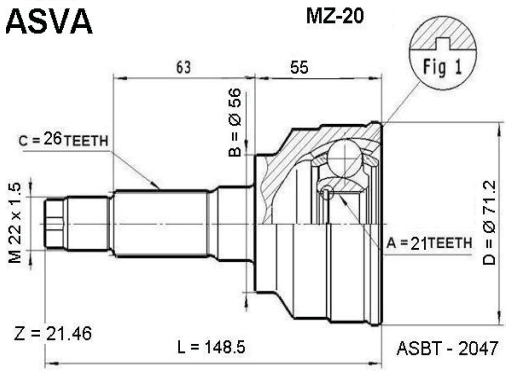

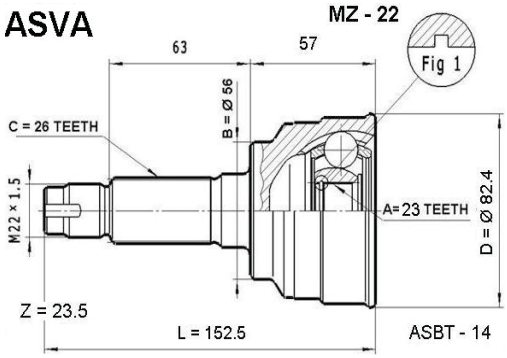

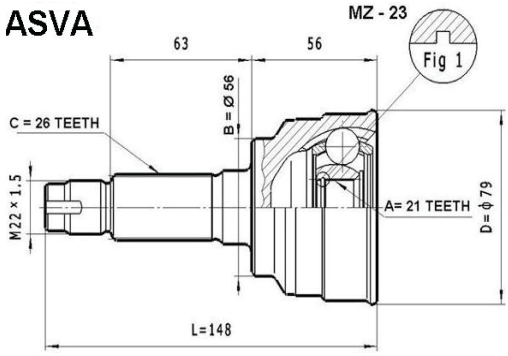

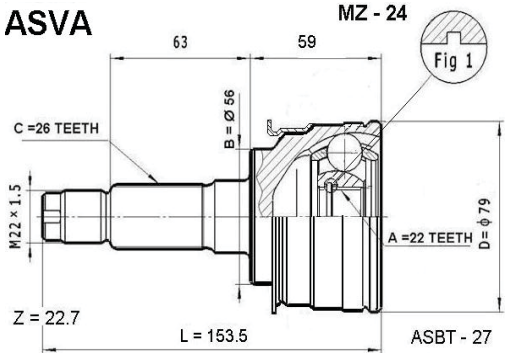

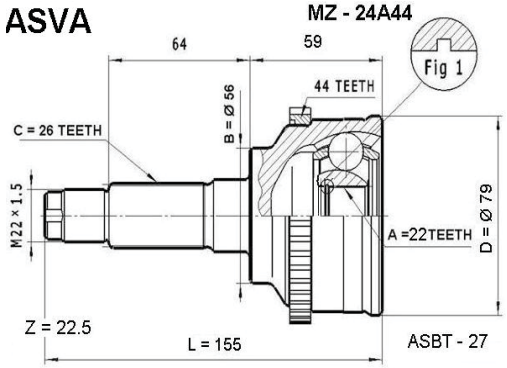

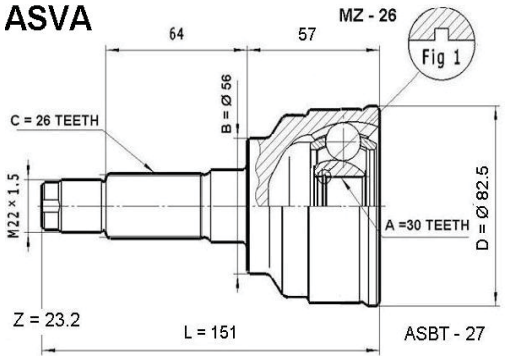

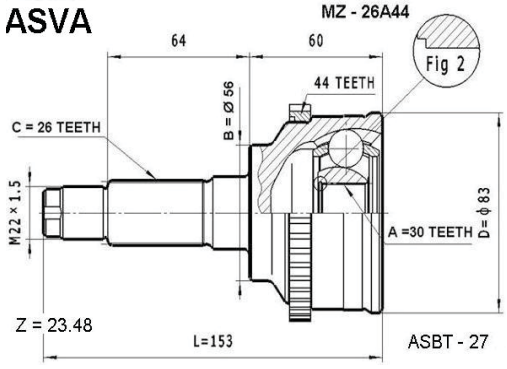

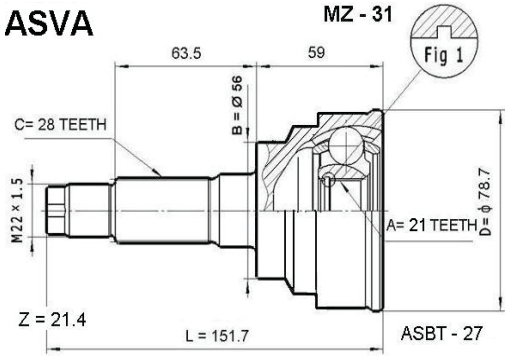

C.V. JOINT OUTER/ ШРУС НАРУЖНИЙ

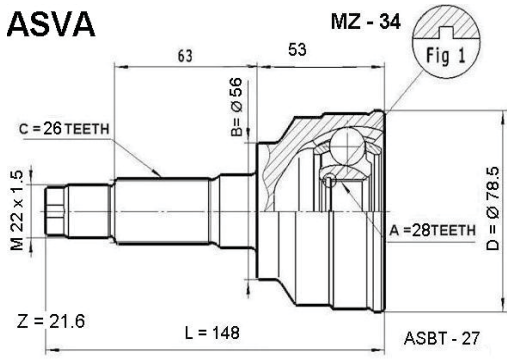

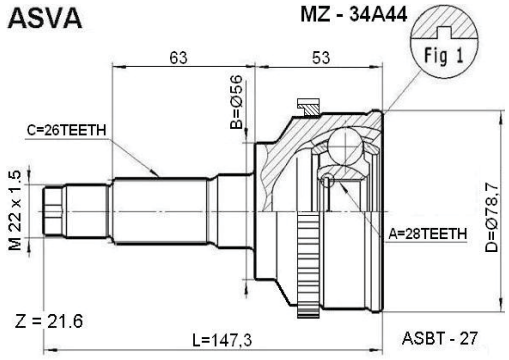

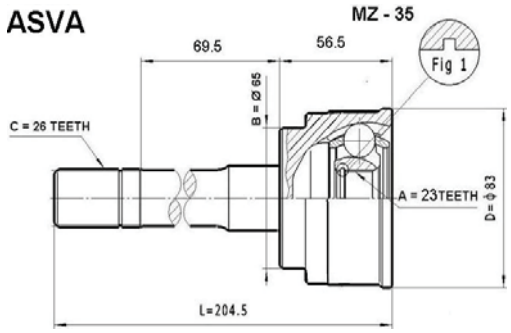

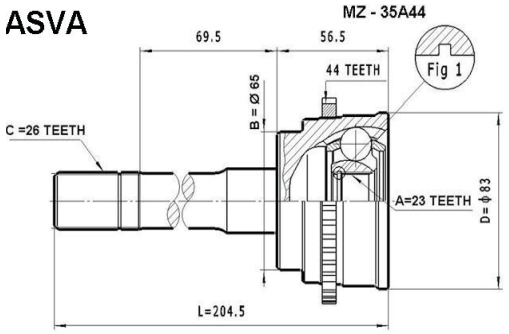

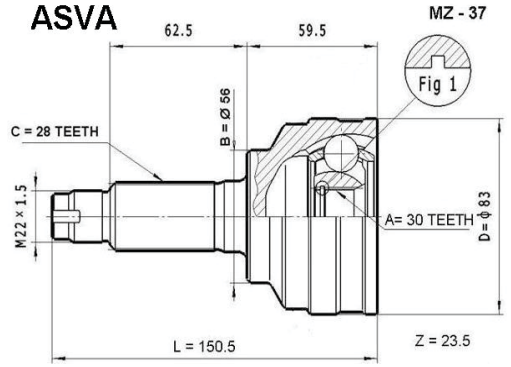

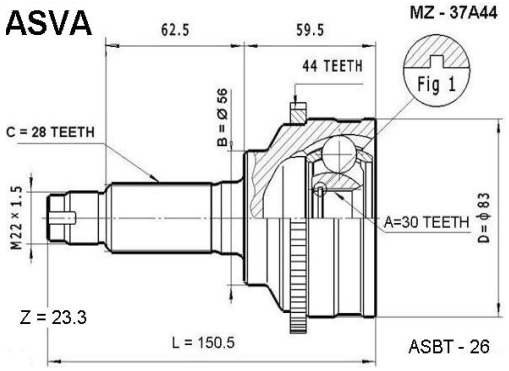

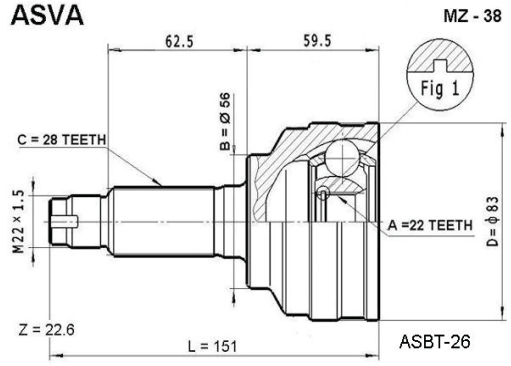

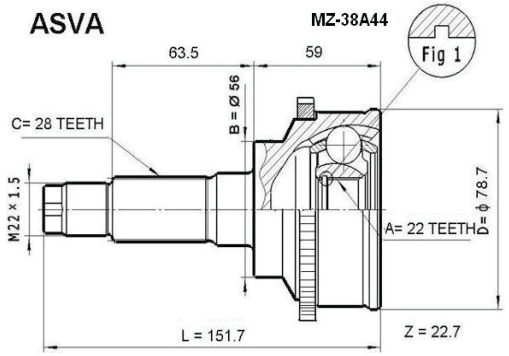

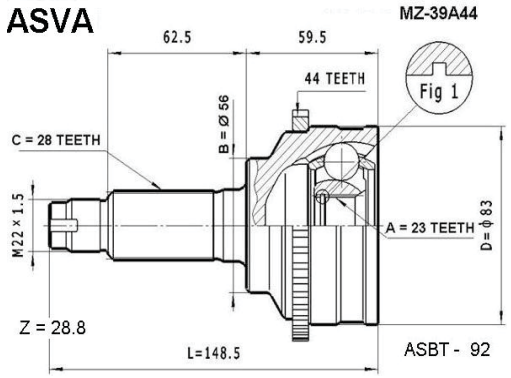

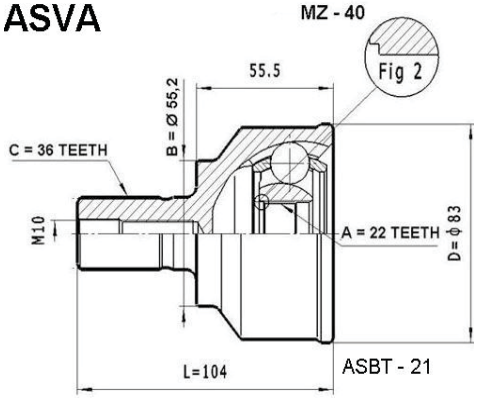

C.V. JOINT OUTER/ ШРУС НАРУЖНИЙ

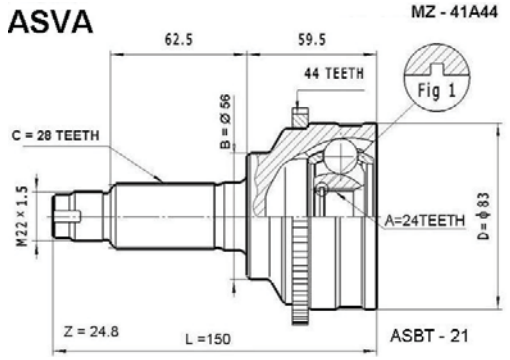

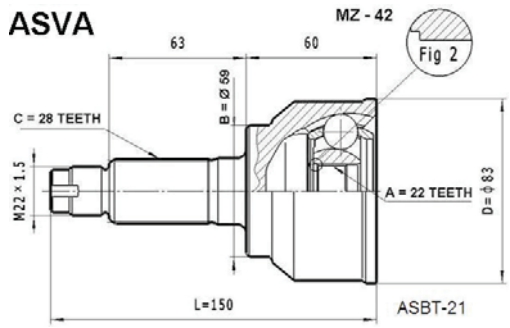

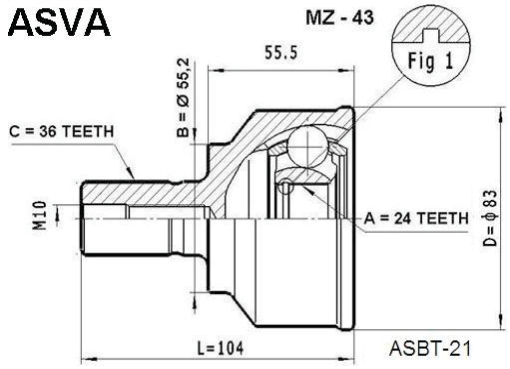

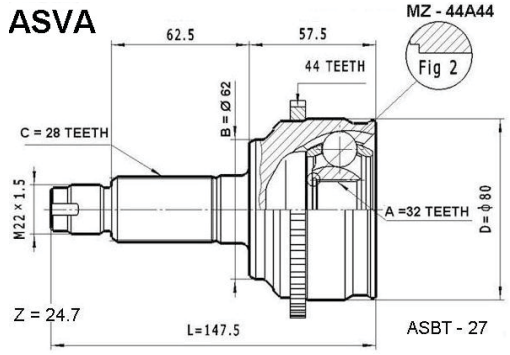

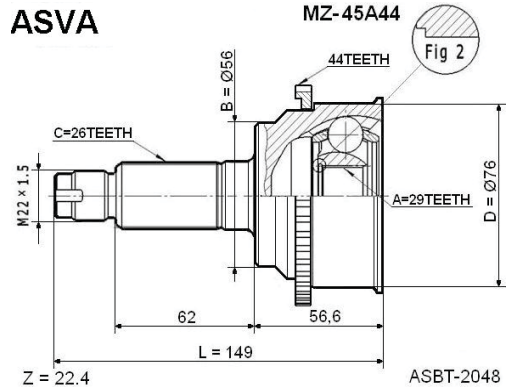

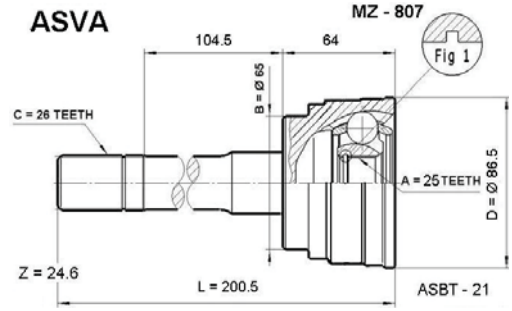

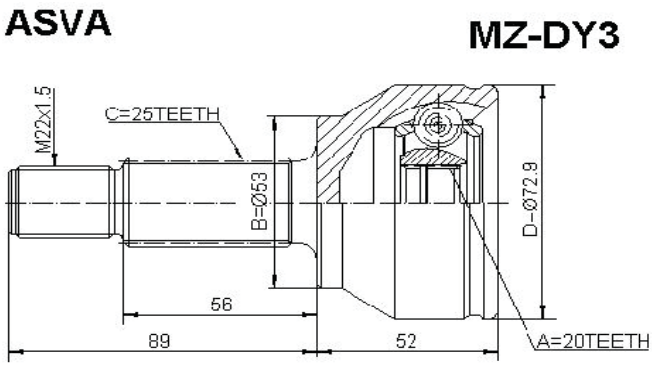

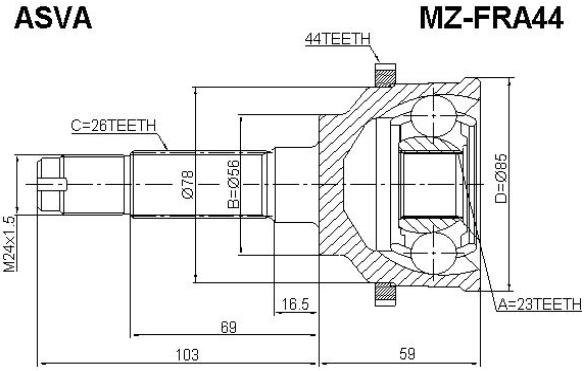

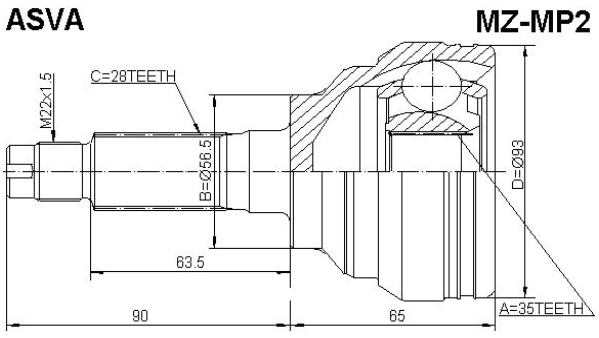

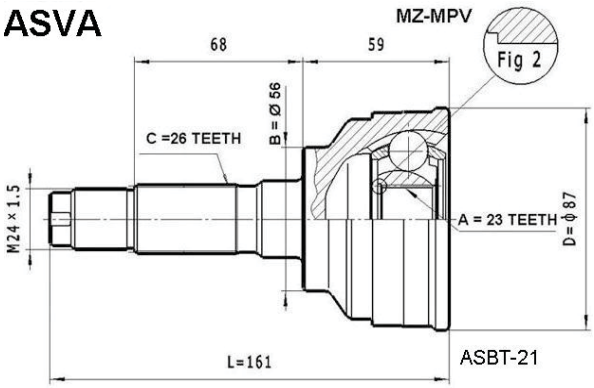

C.V. JOINT OUTER/ ШРУС НАРУЖНИЙ

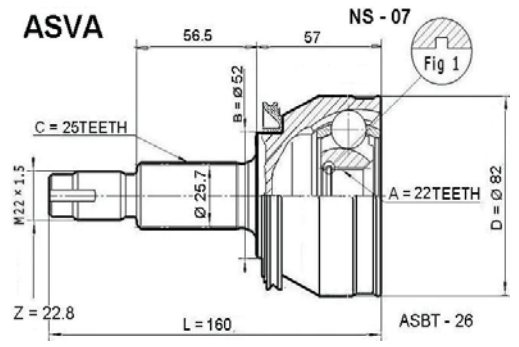

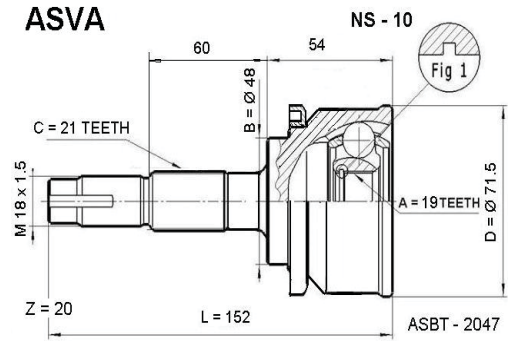

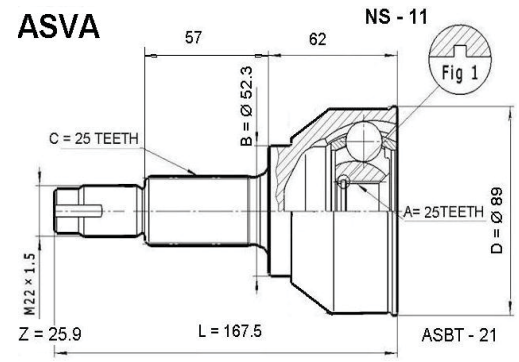

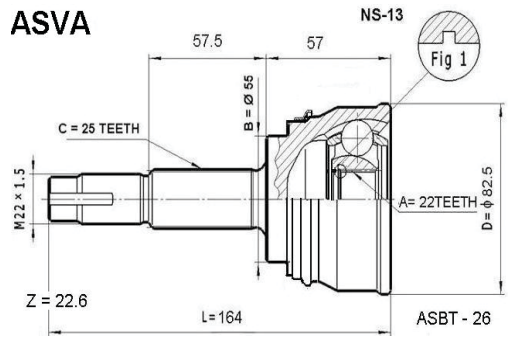

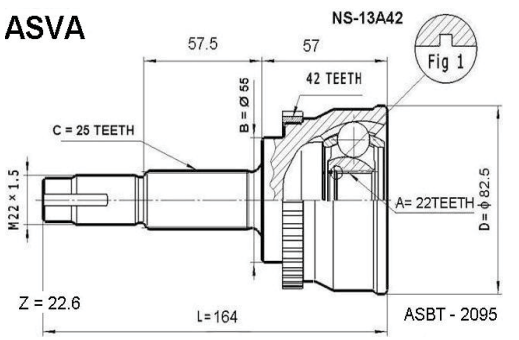

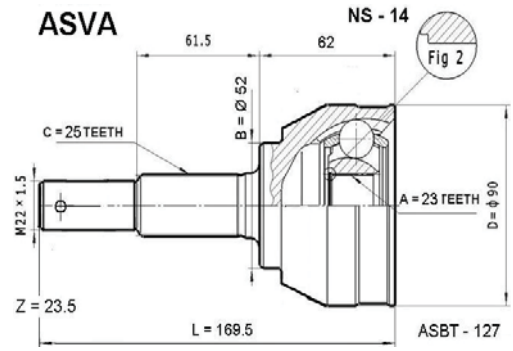

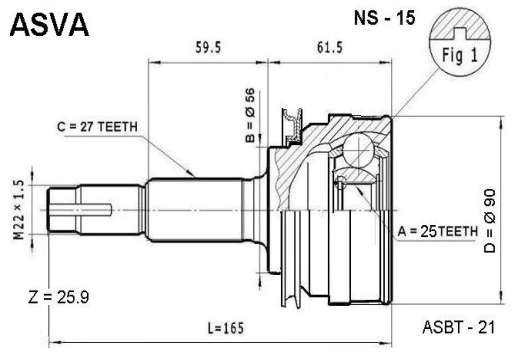

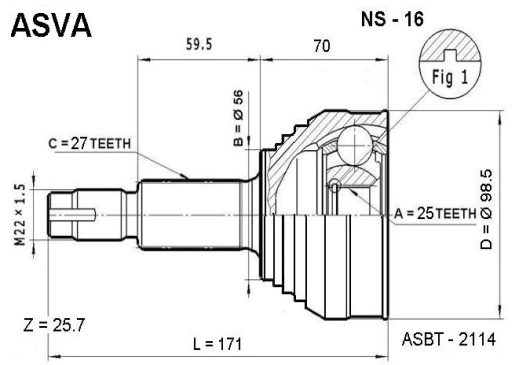

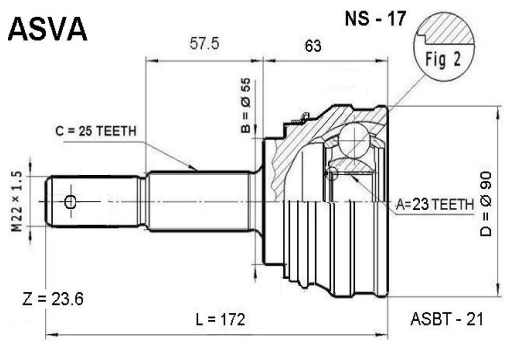

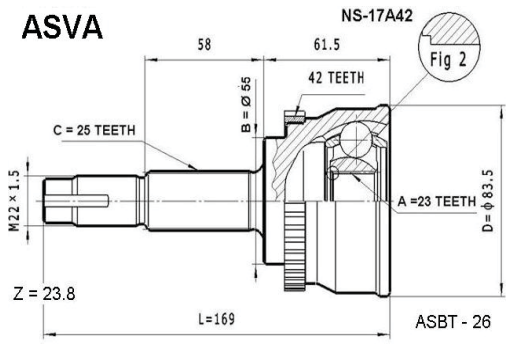

C.V. JOINT OUTER/ ШРУС НАРУЖНИЙ

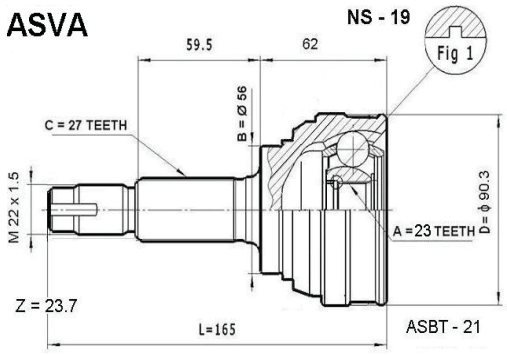

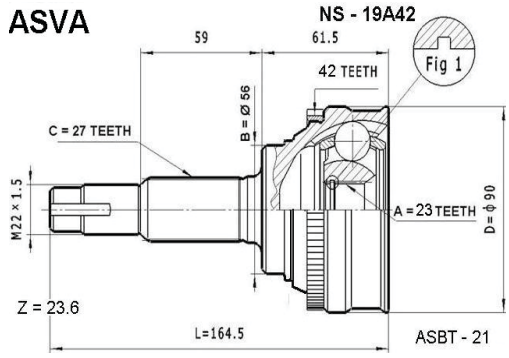

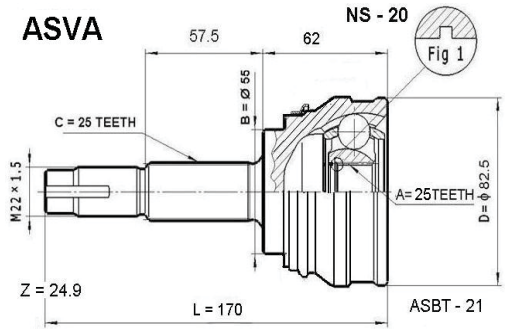

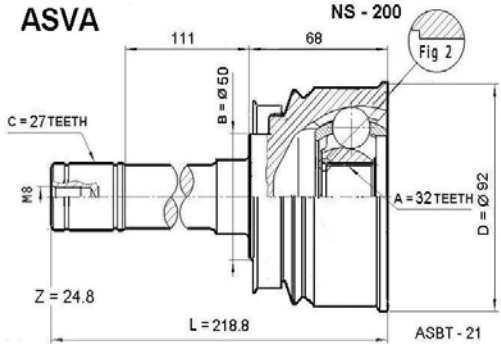

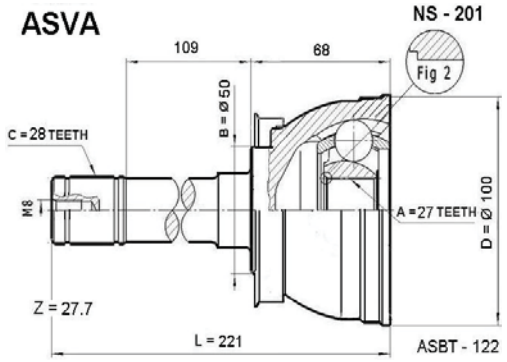

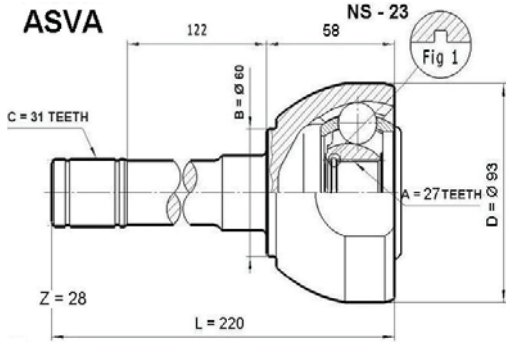

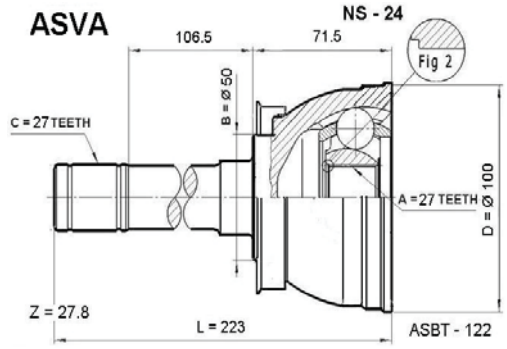

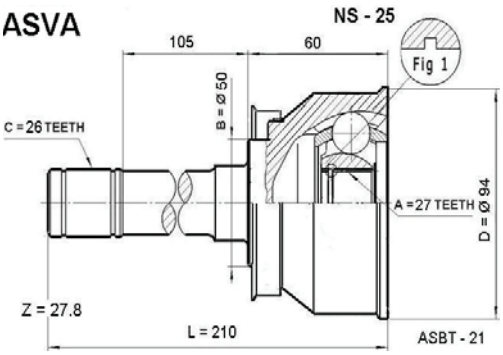

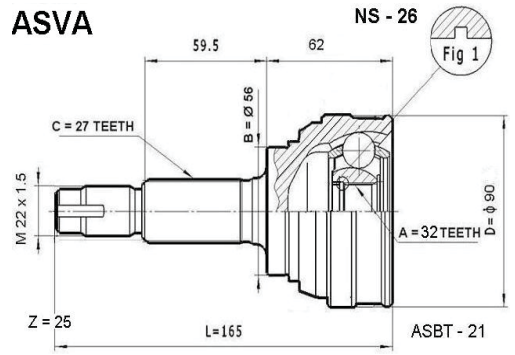

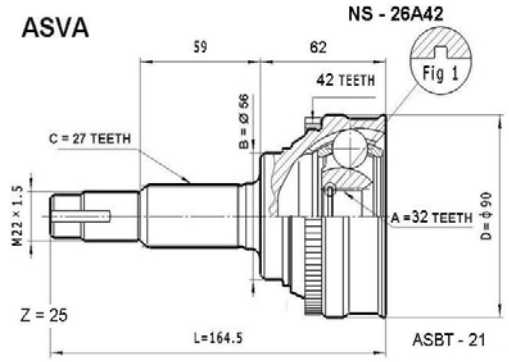

C.V. JOINT OUTER/ ШРУС НАРУЖНИЙ

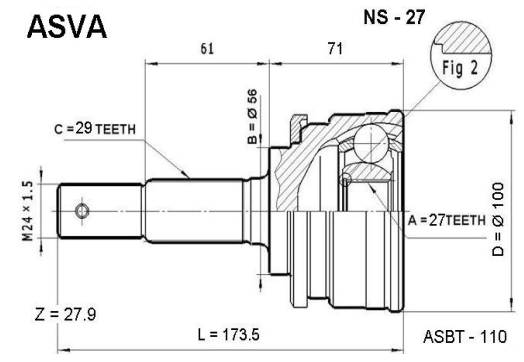

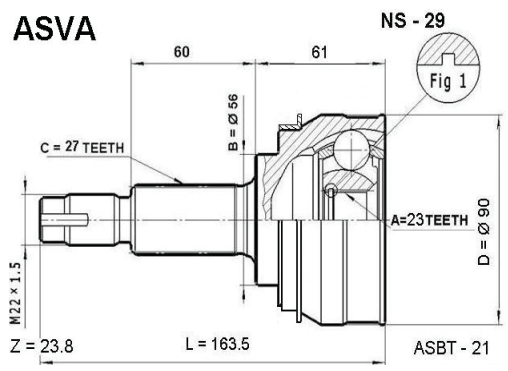

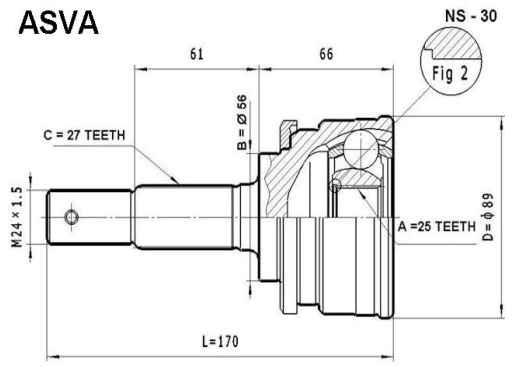

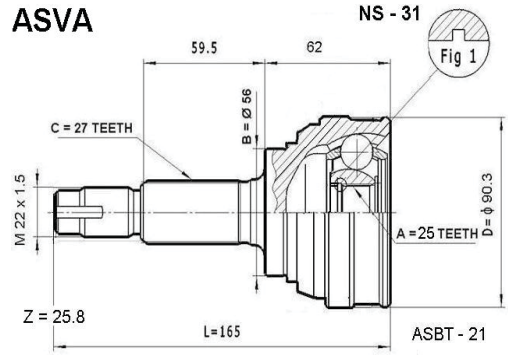

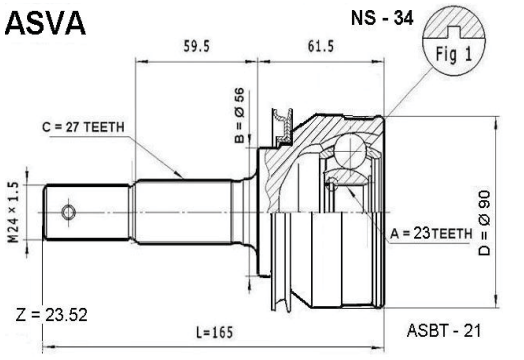

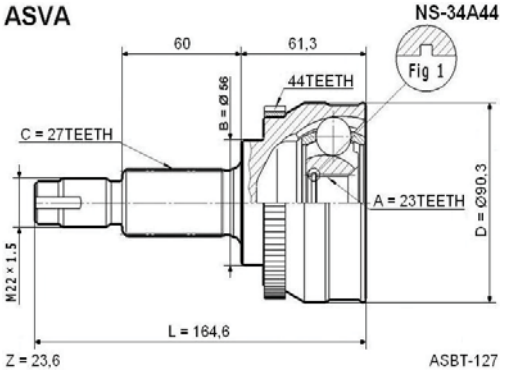

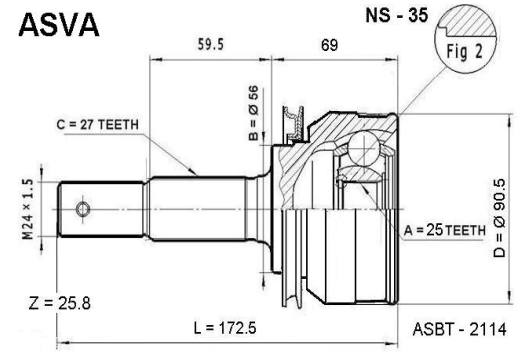

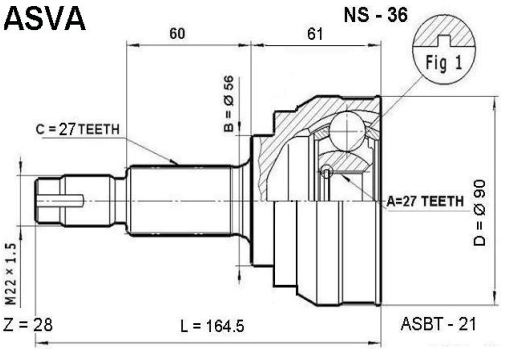

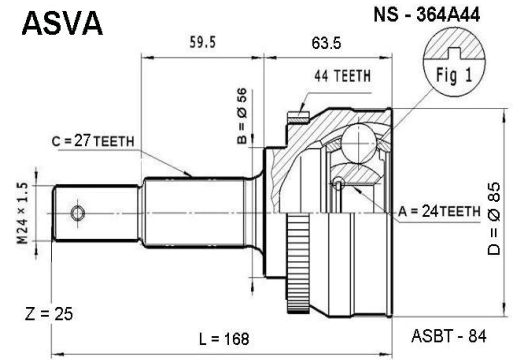

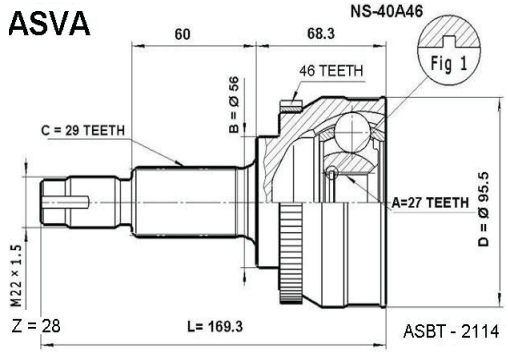

C.V. JOINT OUTER/ ШРУС НАРУЖНИЙ

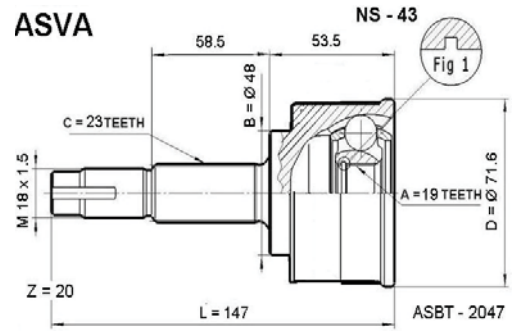

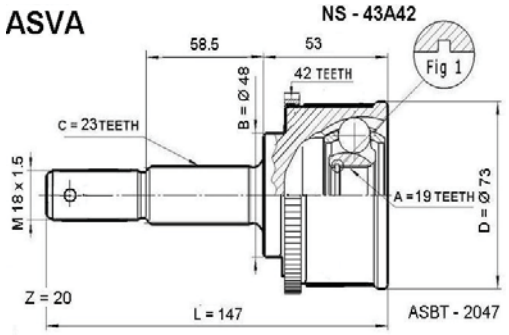

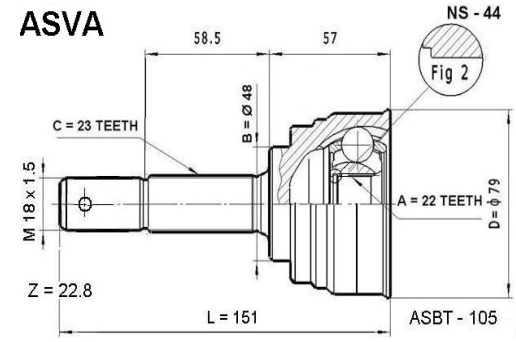

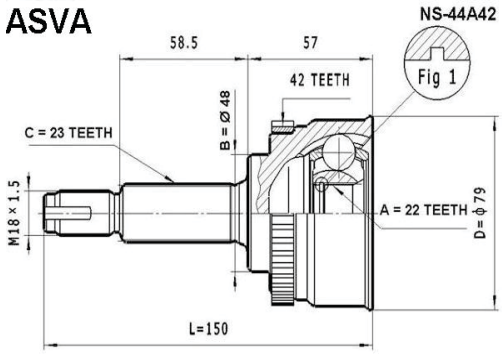

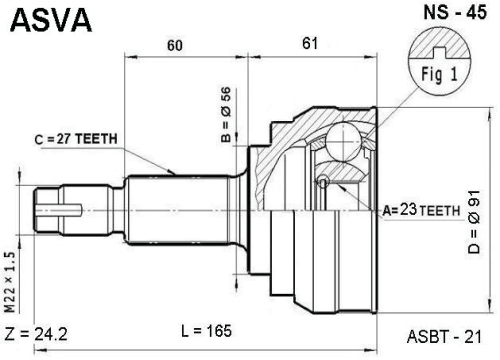

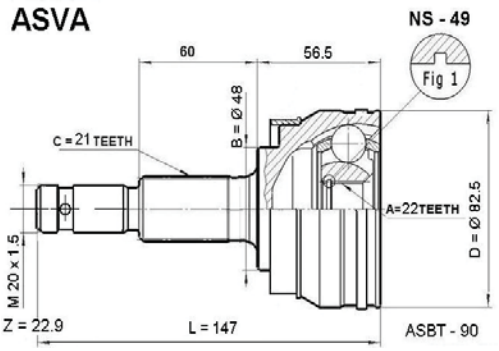

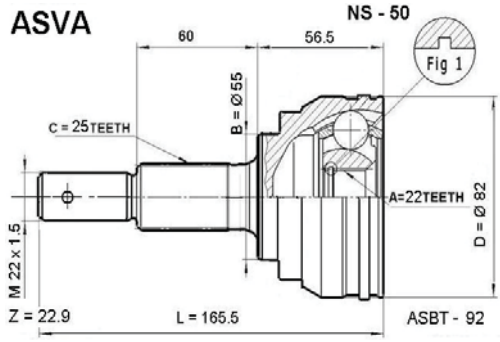

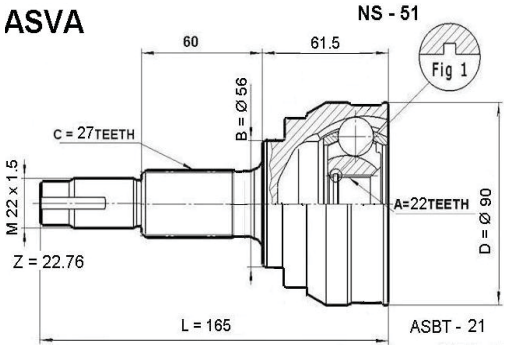

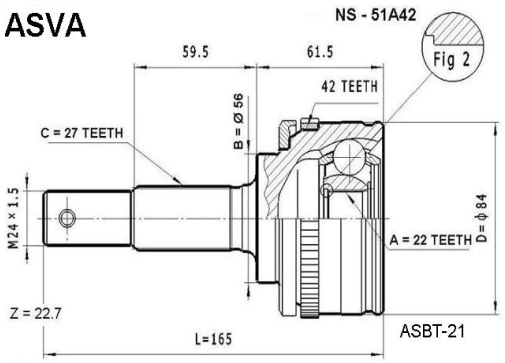

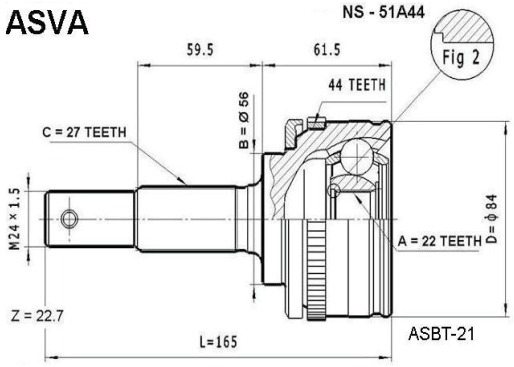

C.V. JOINT OUTER/ ШРУС НАРУЖНИЙ

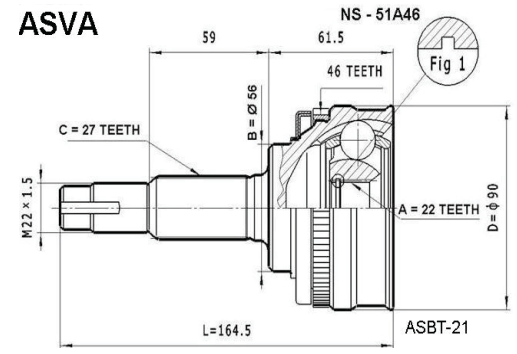

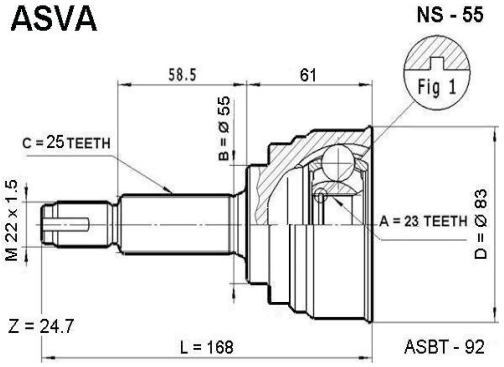

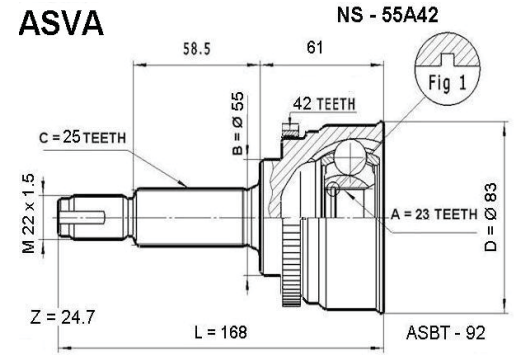

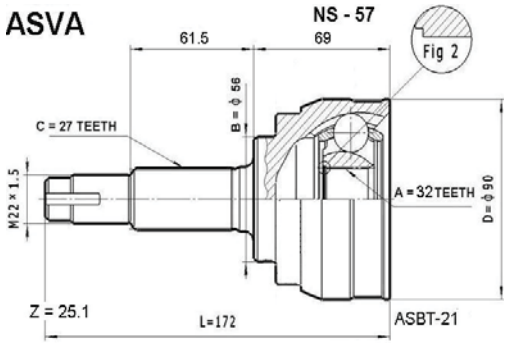

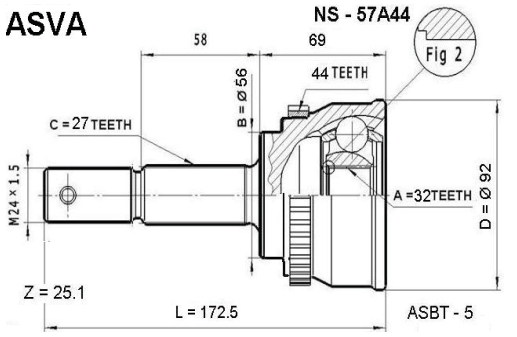

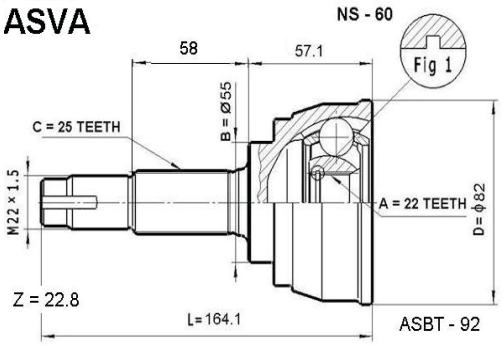

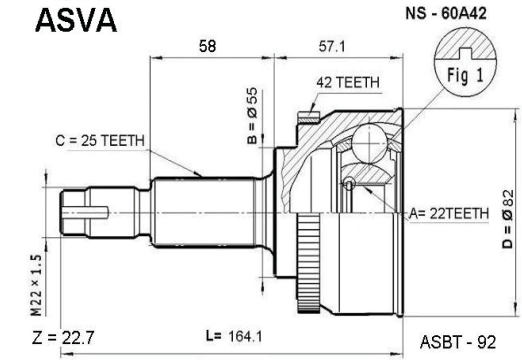

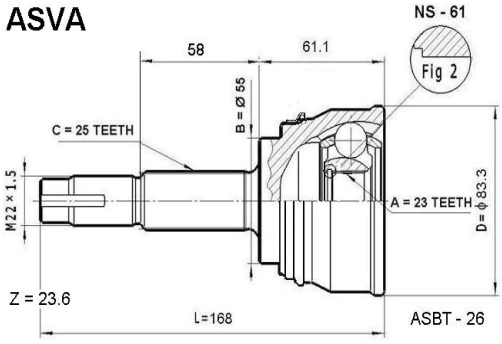

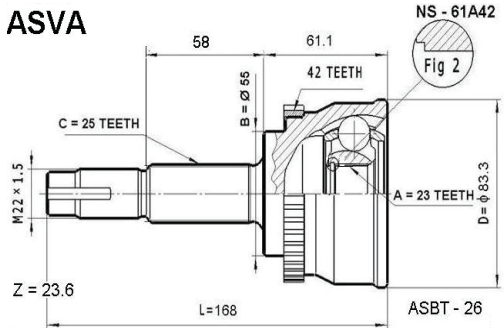

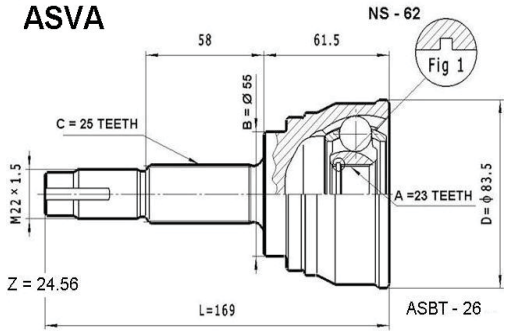

C.V. JOINT OUTER/ ШРУС НАРУЖНИЙ

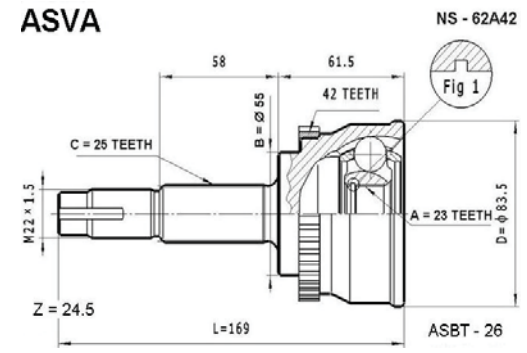

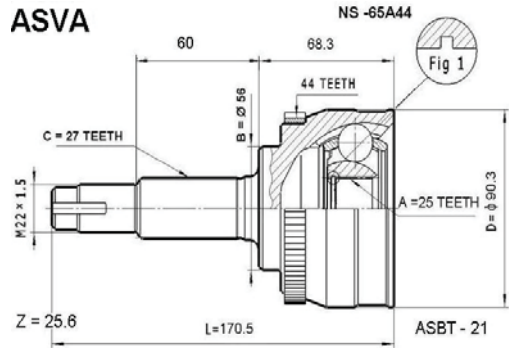

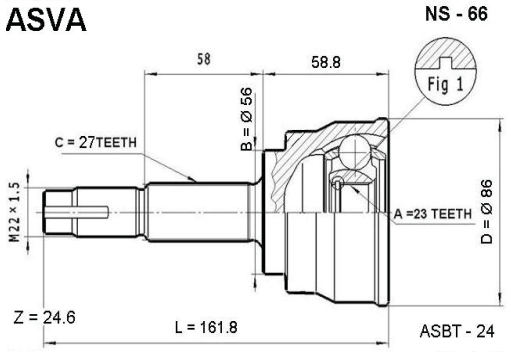

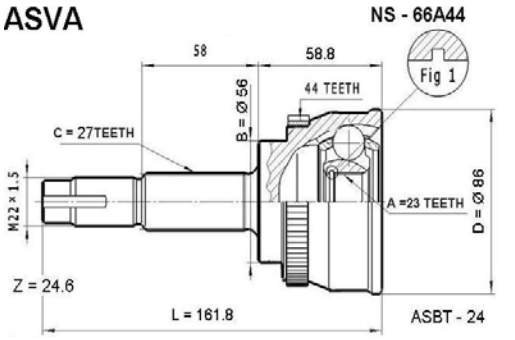

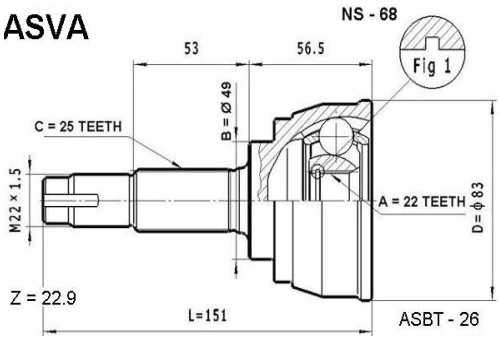

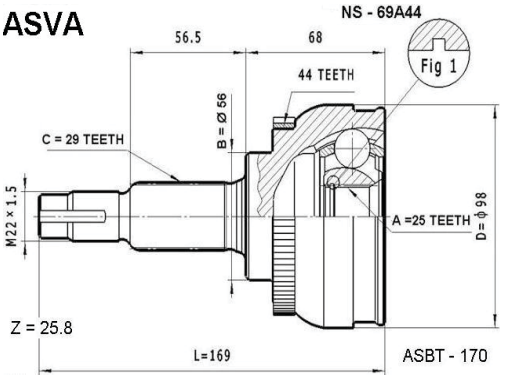

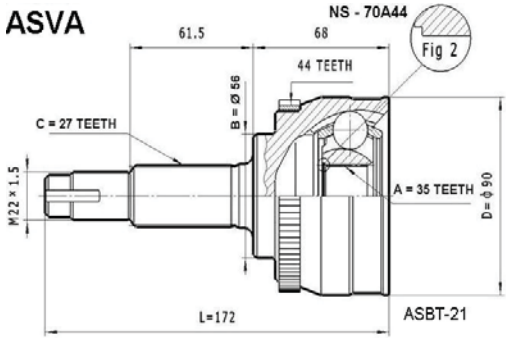

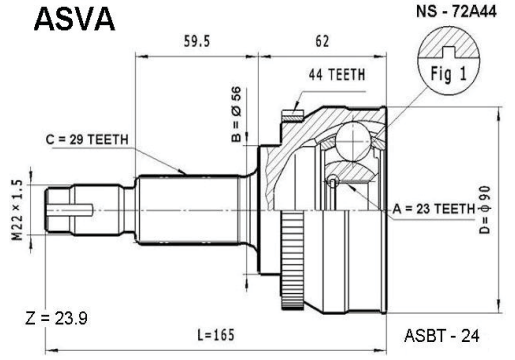

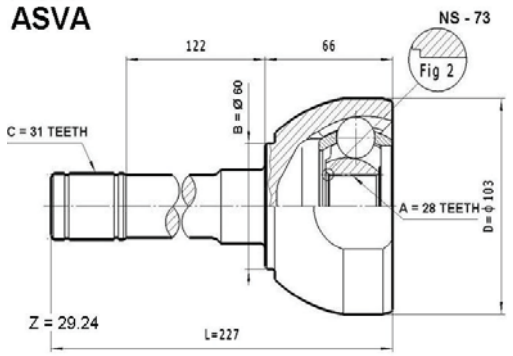

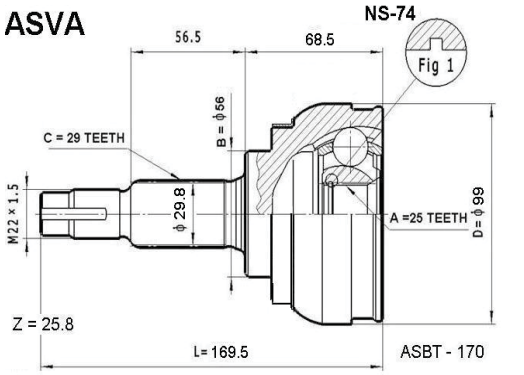

C.V. JOINT OUTER/ ШРУС НАРУЖНИЙ

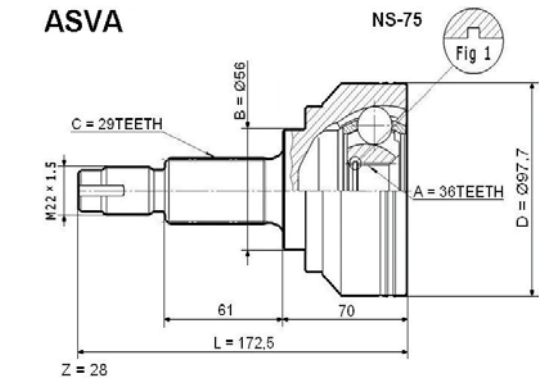

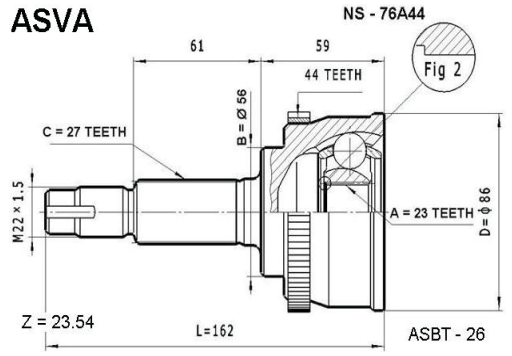

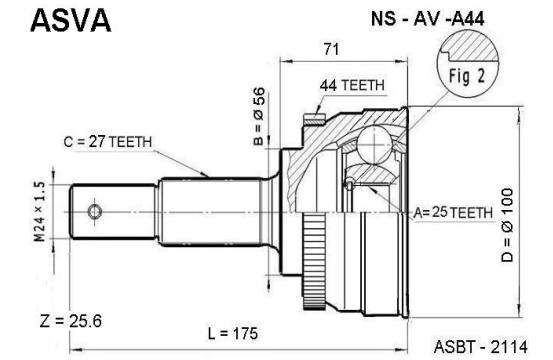

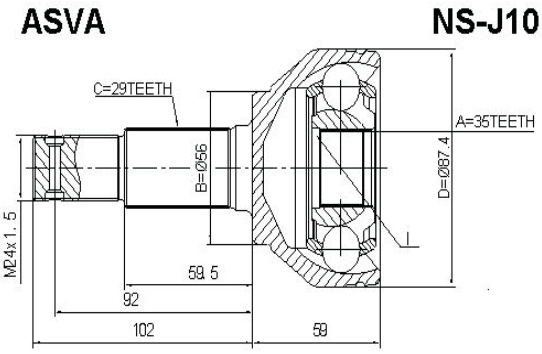

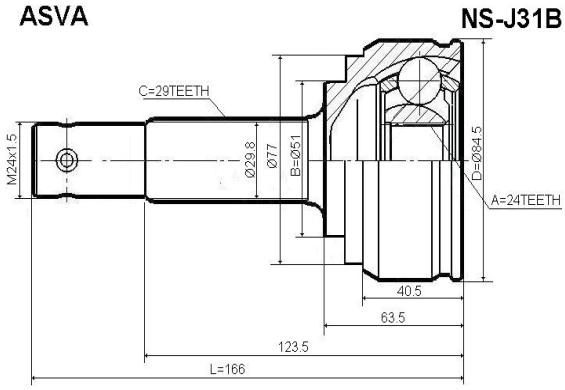

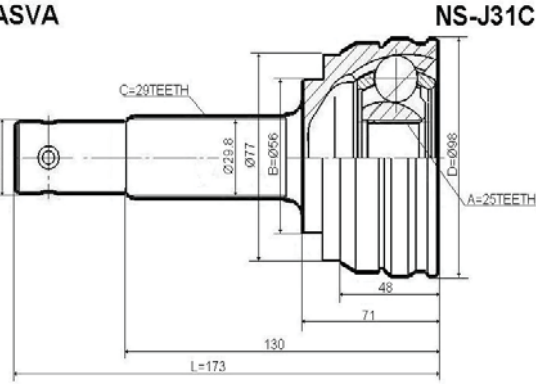

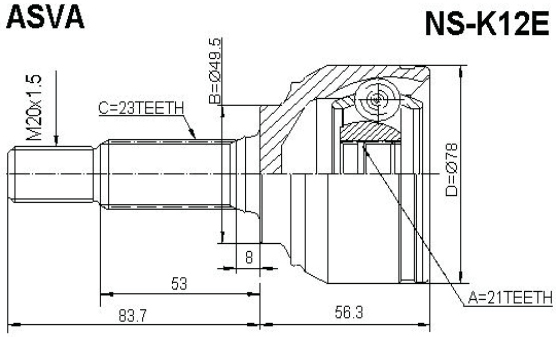

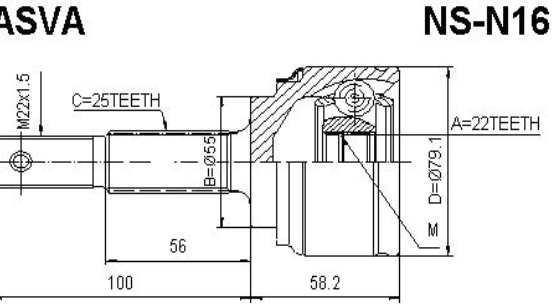

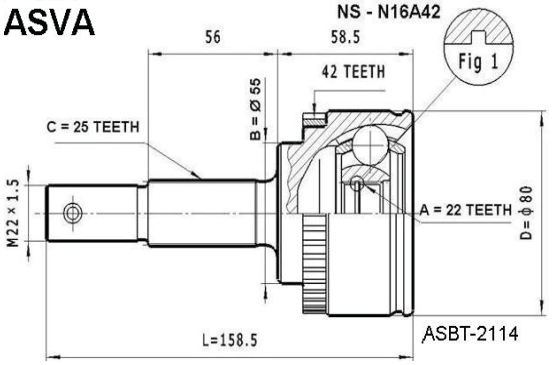

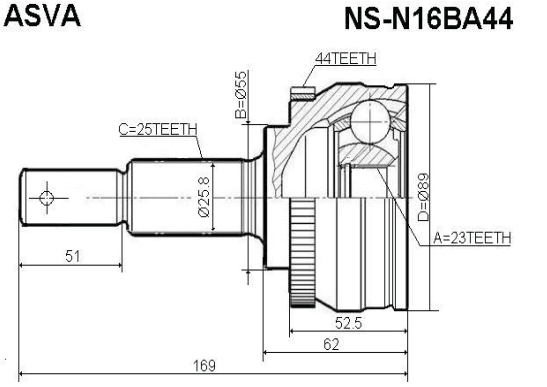

C.V. JOINT OUTER/ ШРУС НАРУЖНИЙ

ASVA **NS-NT**

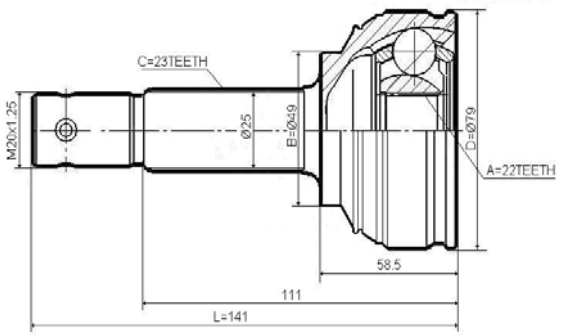

ASVA **NS-P12A44**

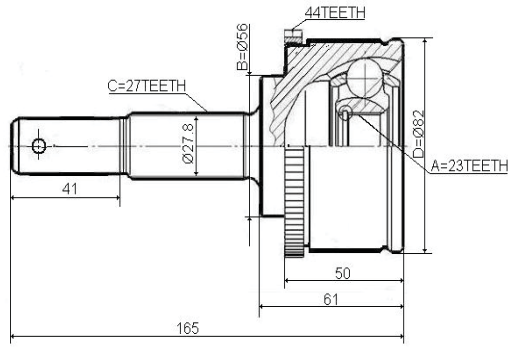

ASVA **NS-P31**

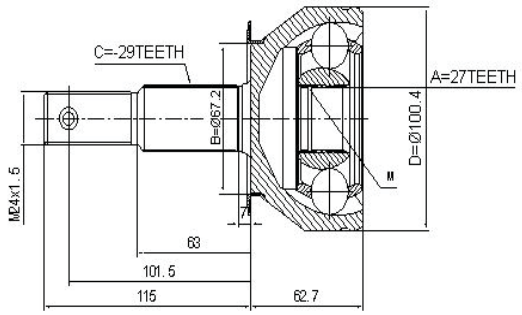

ASVA **NS-P32**

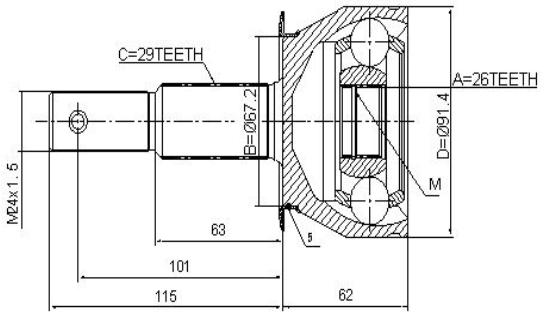

ASVA **NS-QG18A42**

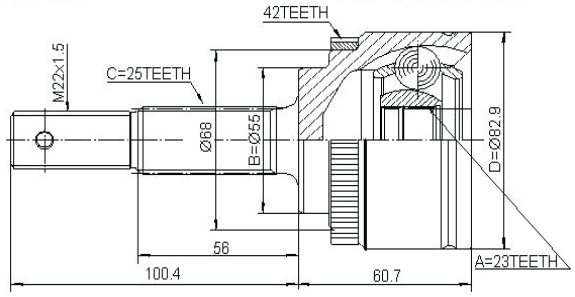

ASVA **NS-SKLRA46**

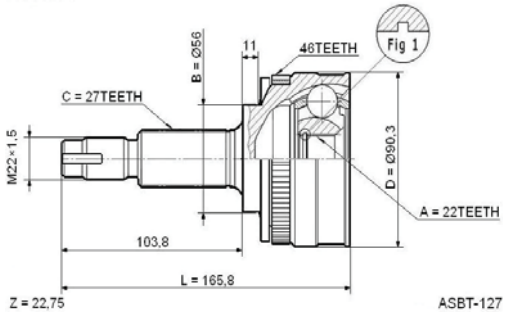

ASVA **NS-TD1**

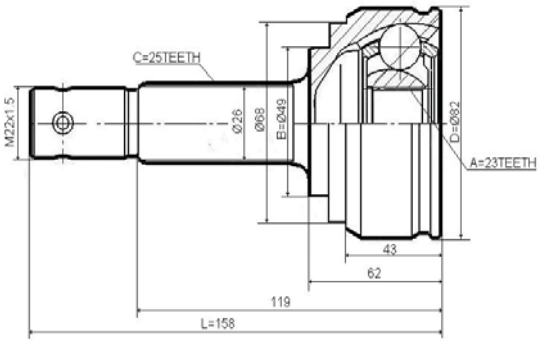

ASVA **NS-TD2**

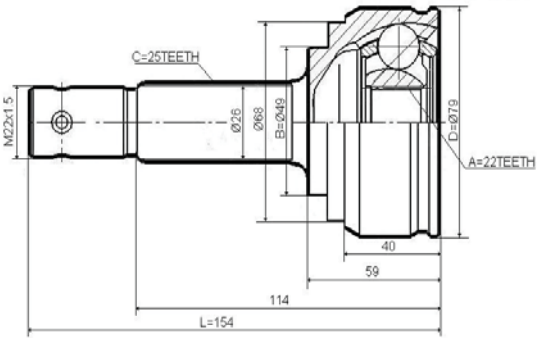

ASVA **NS - TN - A44**

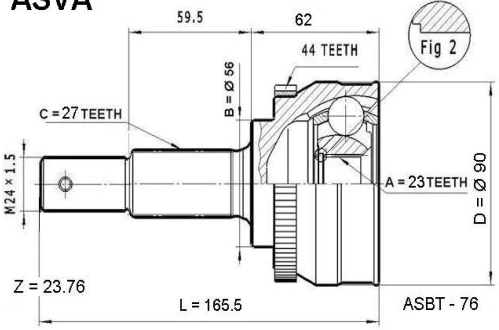

ASVA **NS - W11-A44**

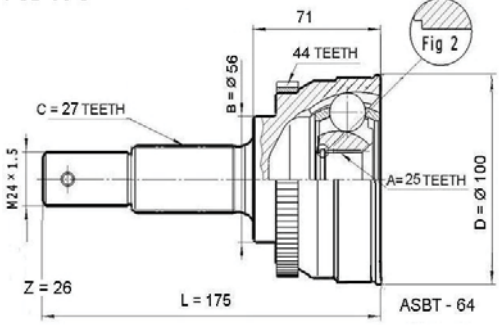

C.V. JOINT OUTER/ ШРУС НАРУЖНИЙ

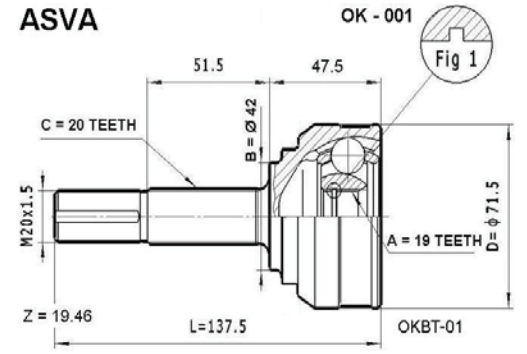

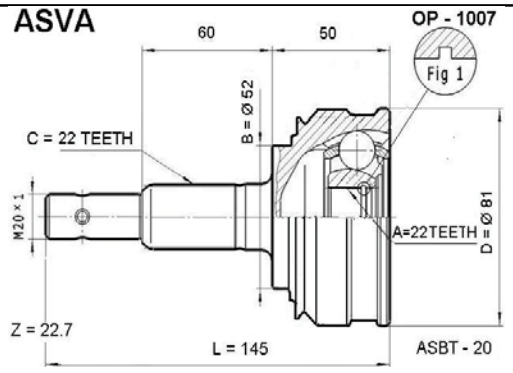

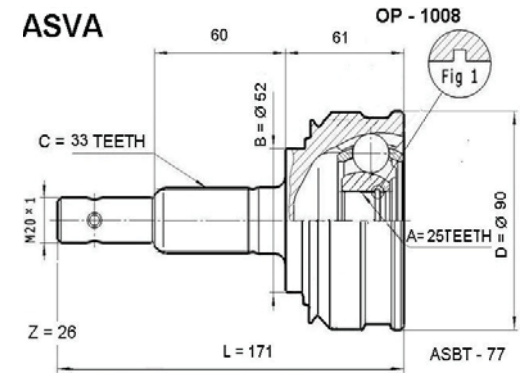

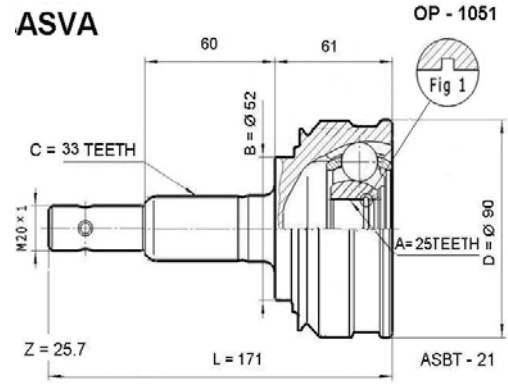

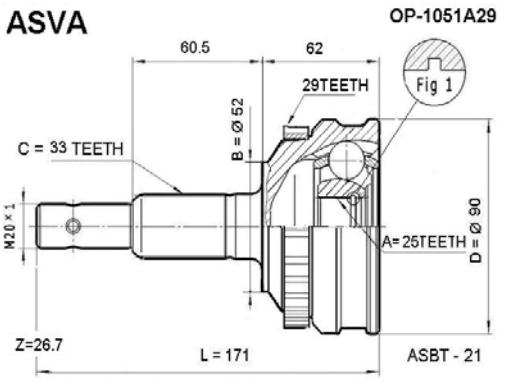

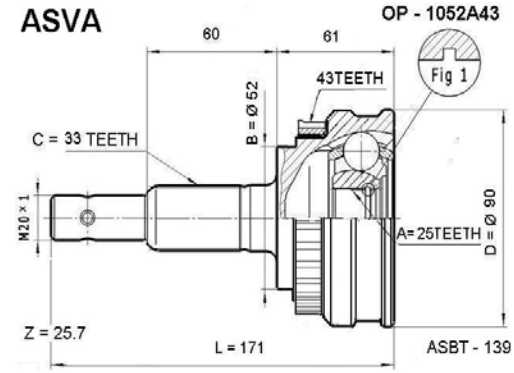

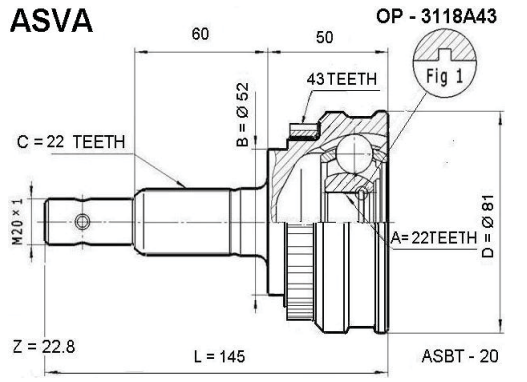

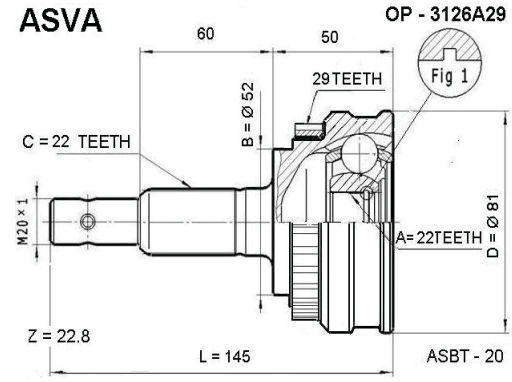

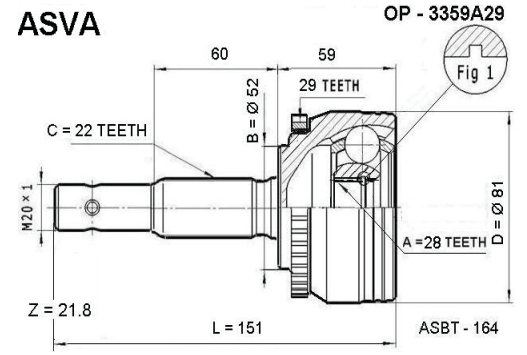

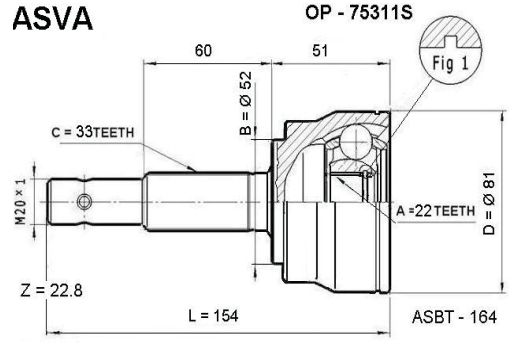

C.V. JOINT OUTER/ ШРУС НАРУЖНИЙ

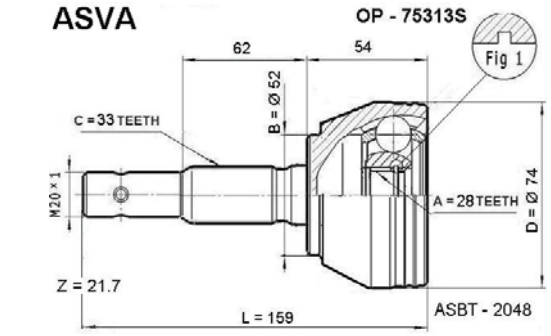

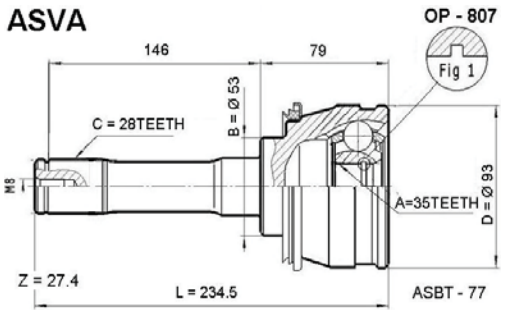

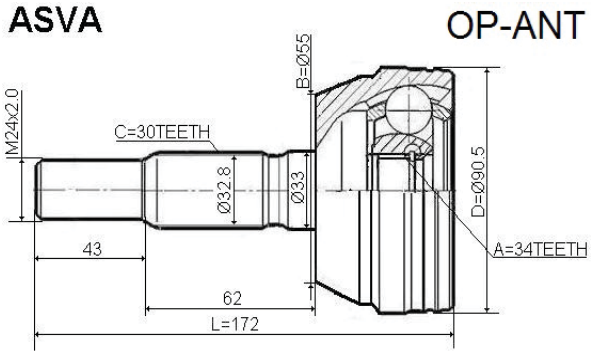

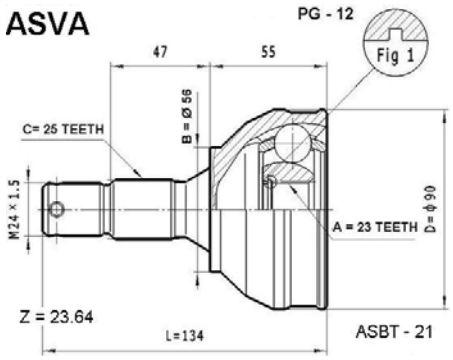

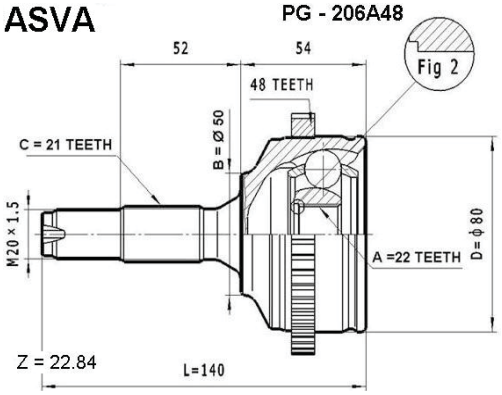

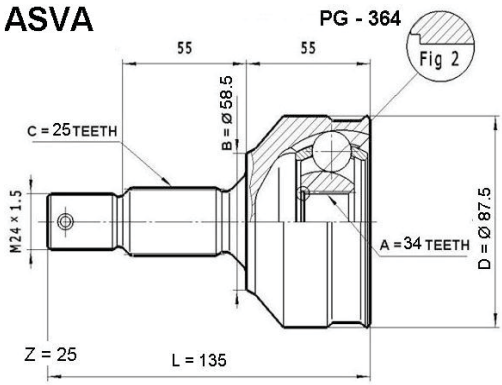

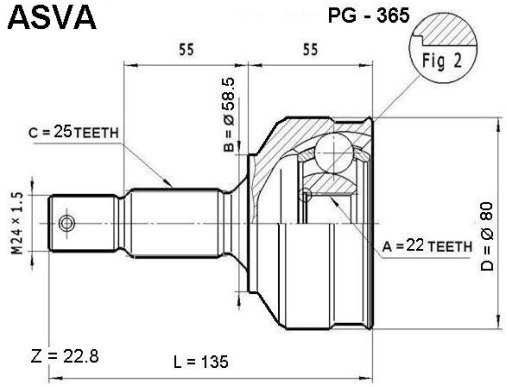

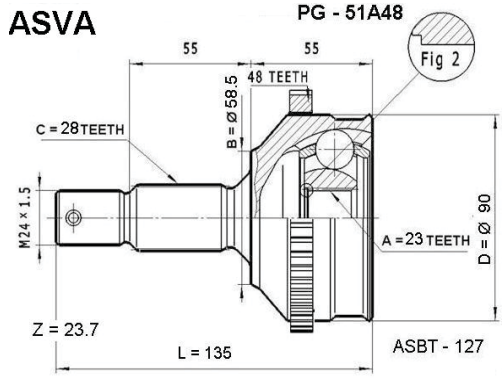

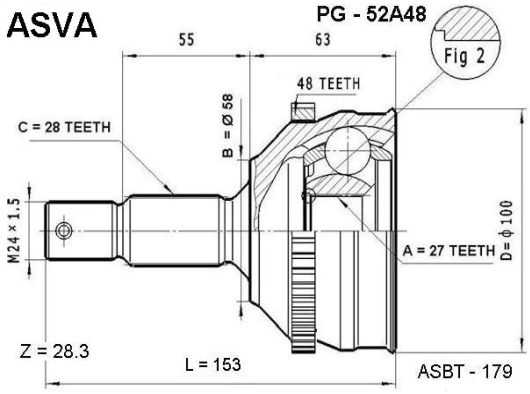

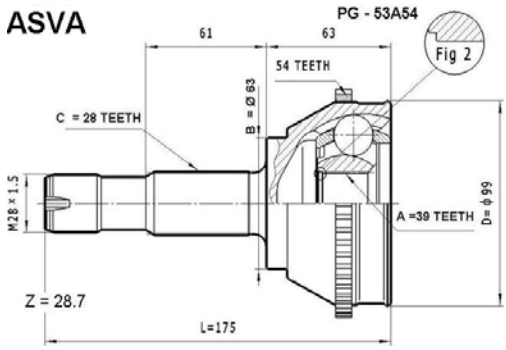

C.V. JOINT OUTER/ ШРУС НАРУЖНИЙ

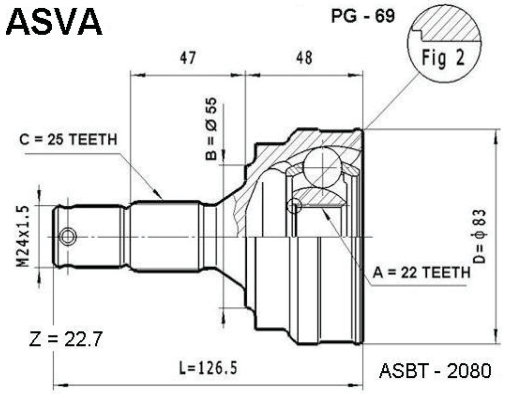

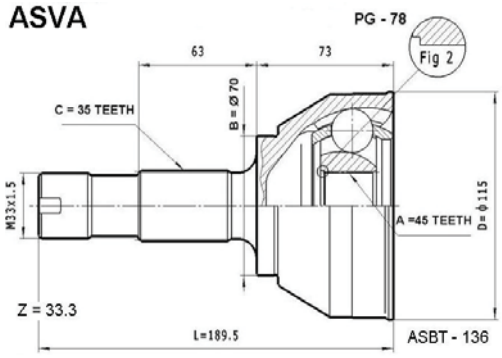

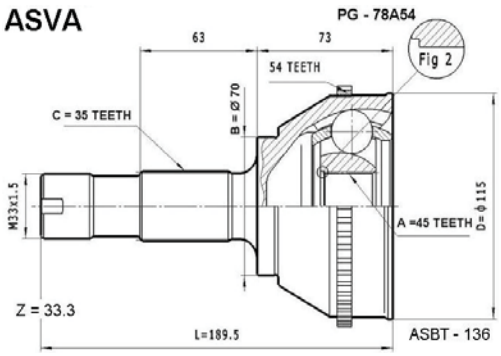

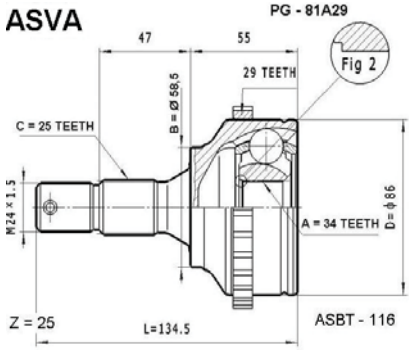

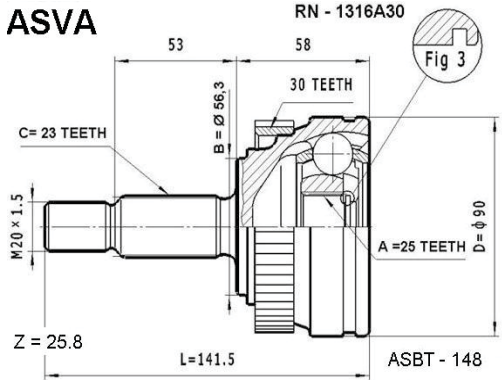

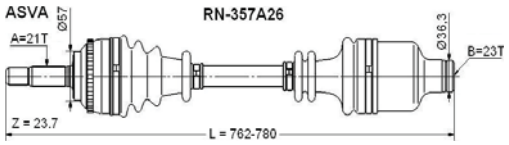

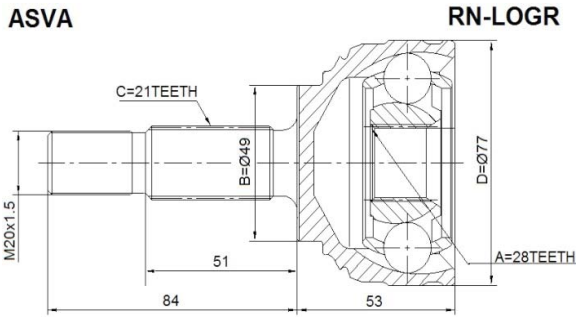

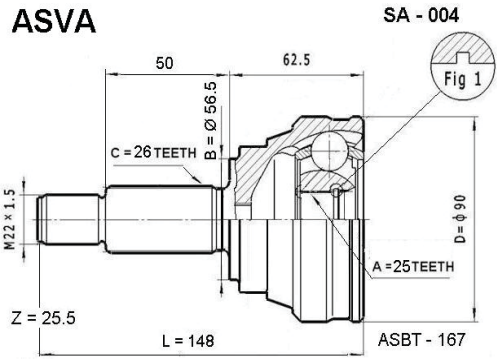

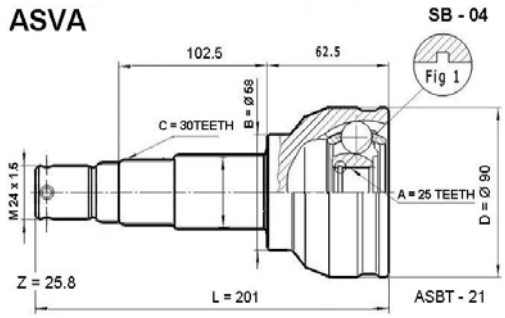

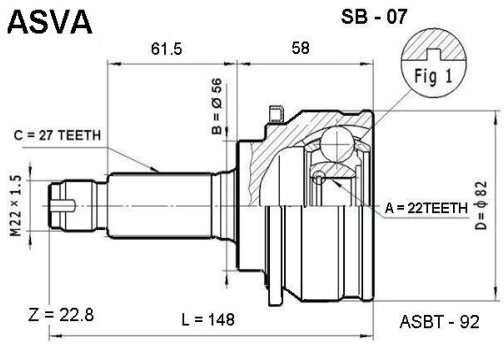

C.V. JOINT OUTER/ ШРУС НАРУЖНИЙ

ASVA SB - 08

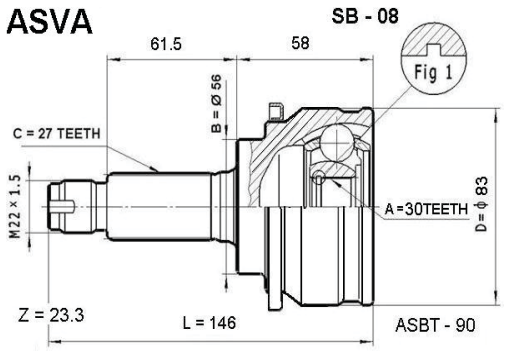

ASVA SB - 09

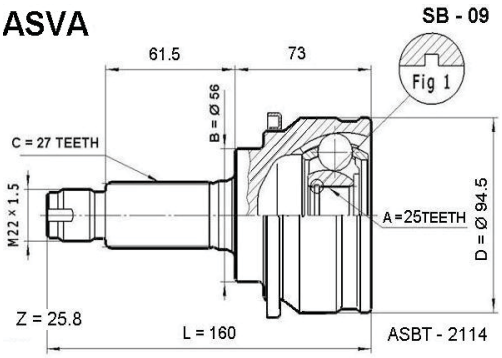

ASVA SB - 19

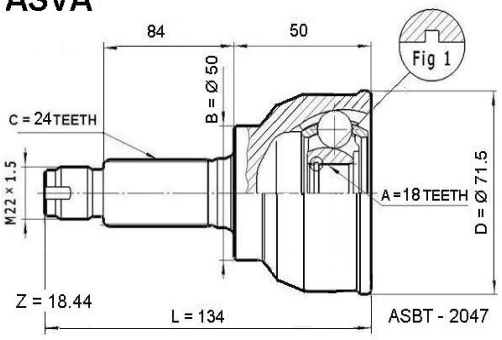

ASVA SB - 26

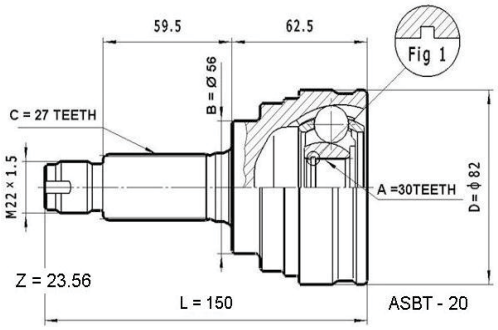

ASVA SB - 26A44

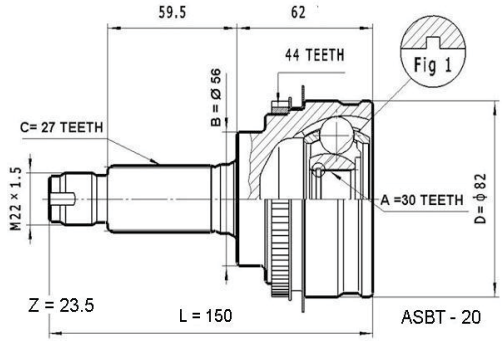

ASVA SB-TRC

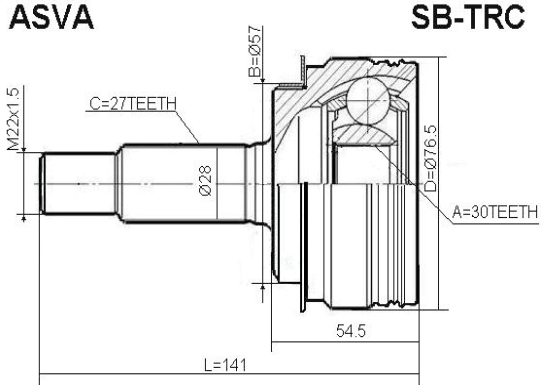

ASVA SBR - 01

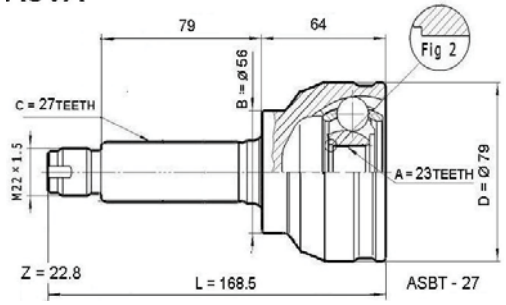

ASVA SK - 1158

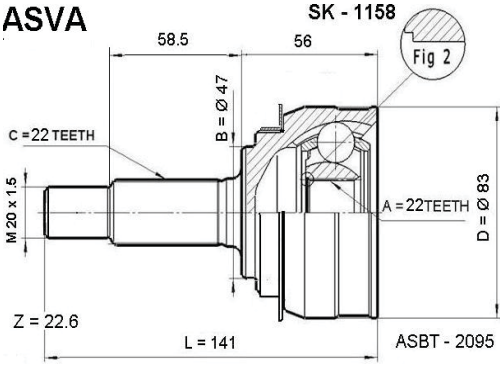

ASVA SK-1403

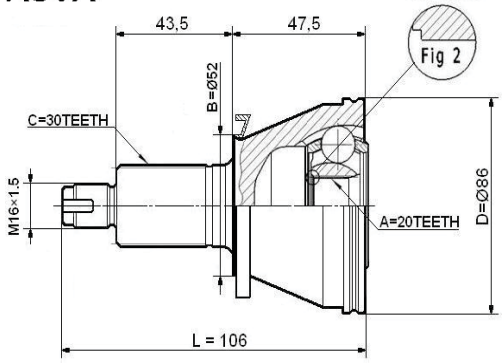

ASVA SK-1413

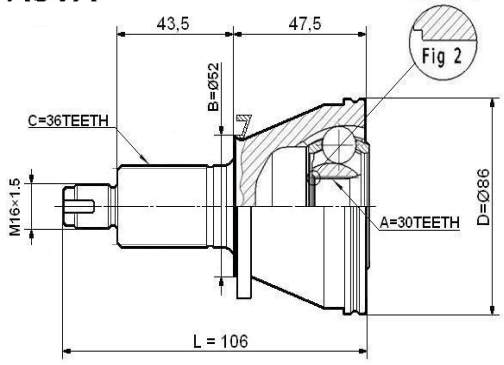

C.V. JOINT OUTER/ ШРУС НАРУЖНИЙ

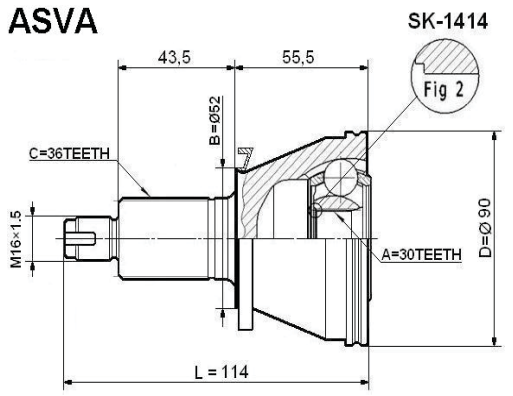

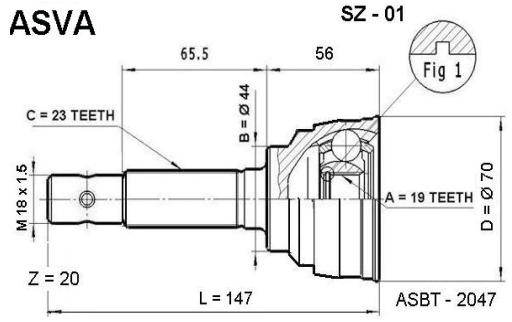

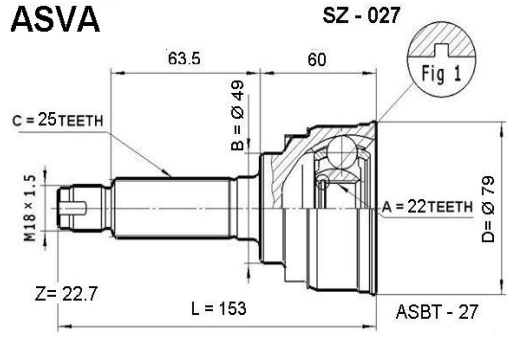

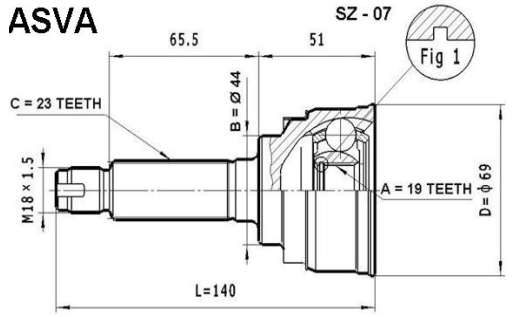

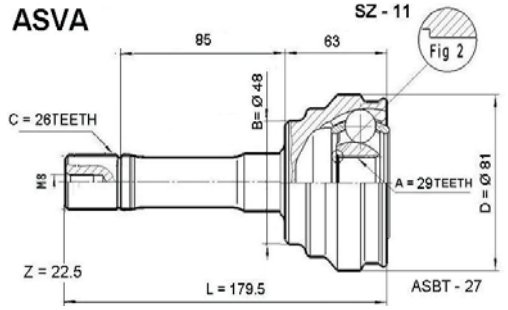

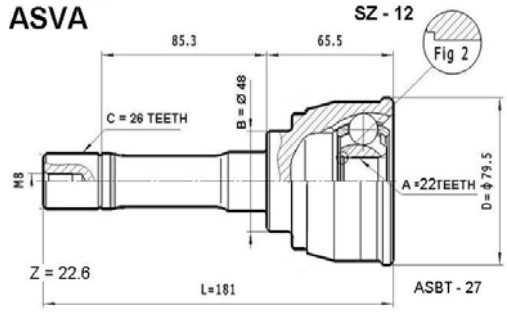

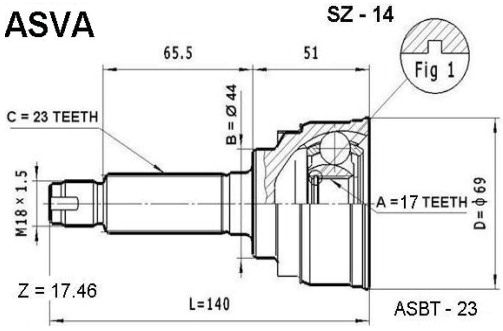

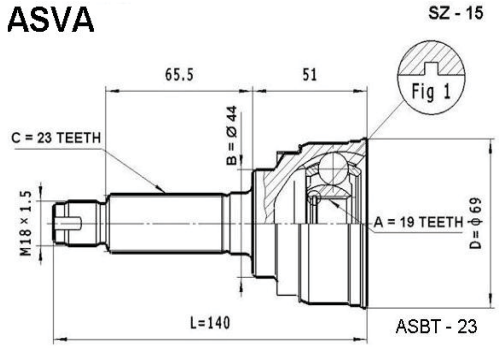

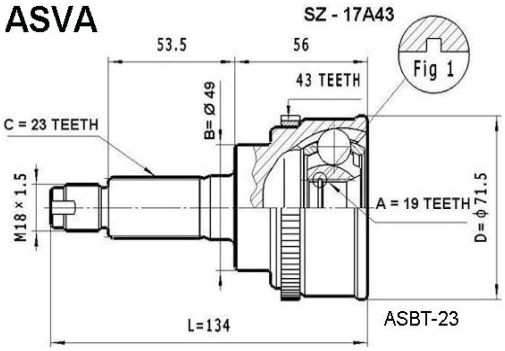

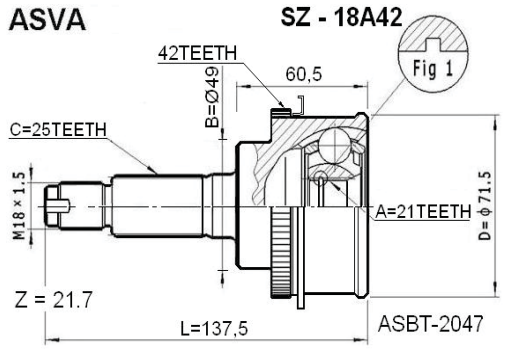

C.V. JOINT OUTER/ ШРУС НАРУЖНИЙ

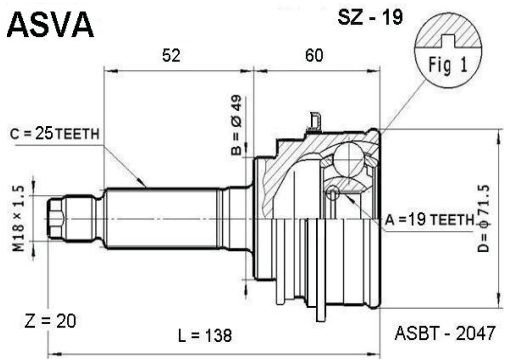

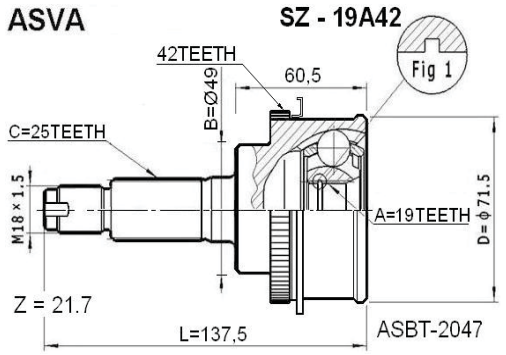

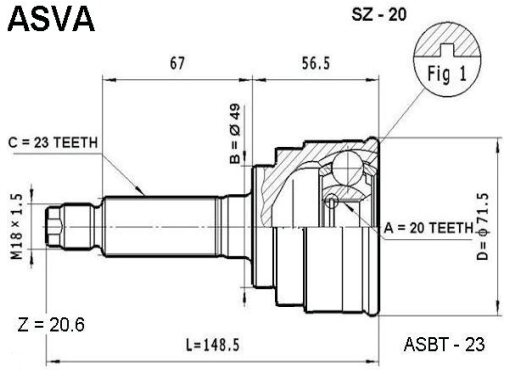

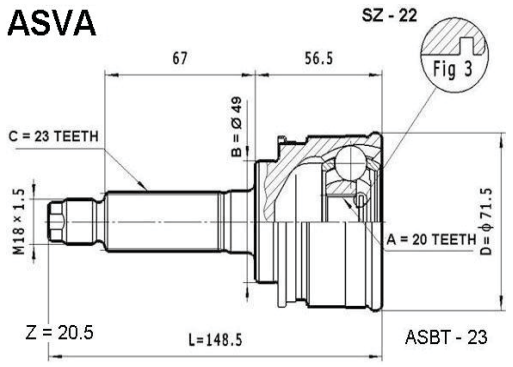

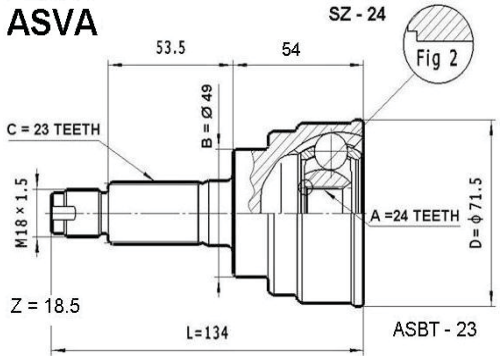

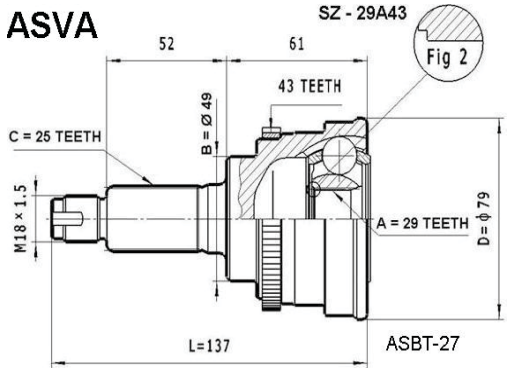

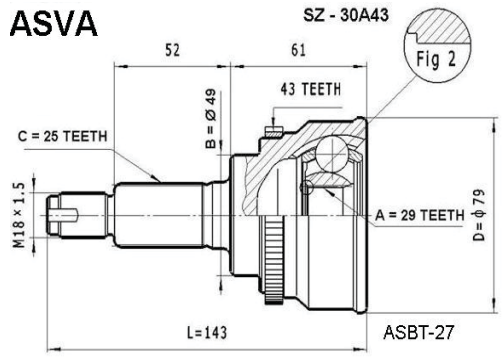

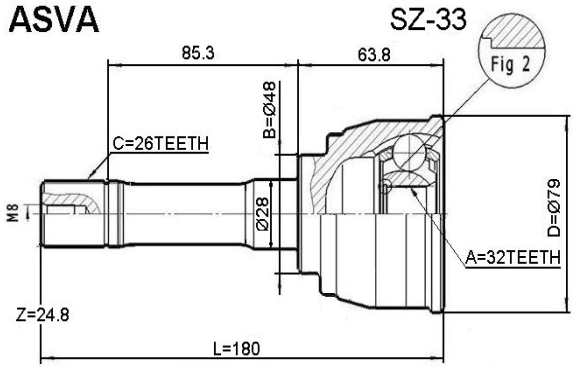

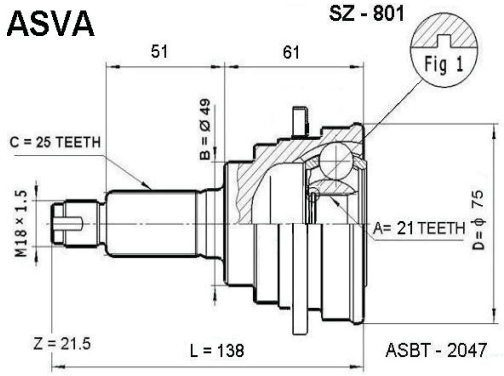

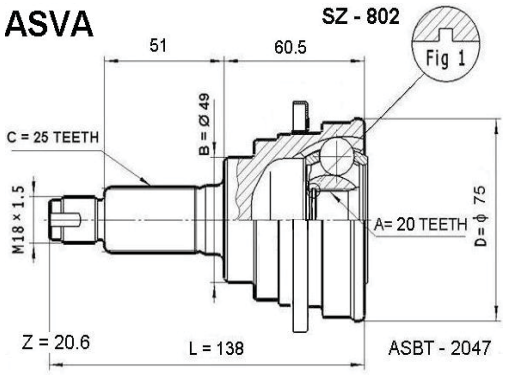

C.V. JOINT OUTER/ ШРУС НАРУЖНИЙ

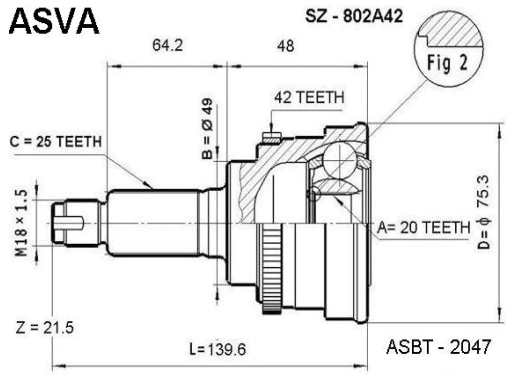

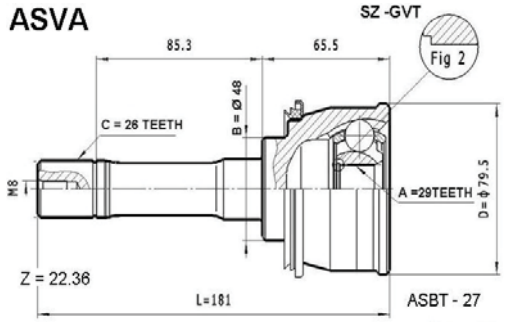

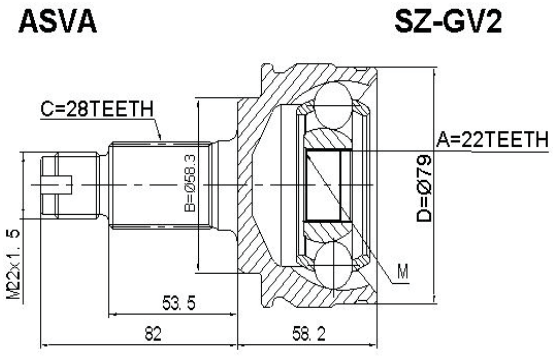

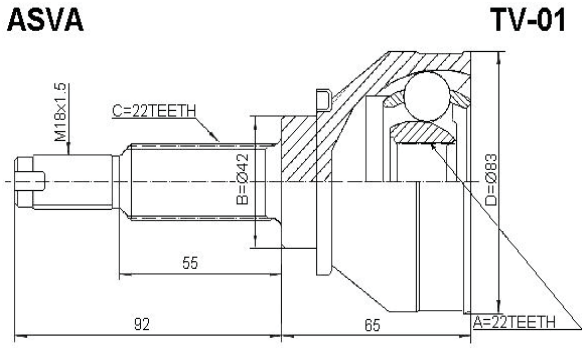

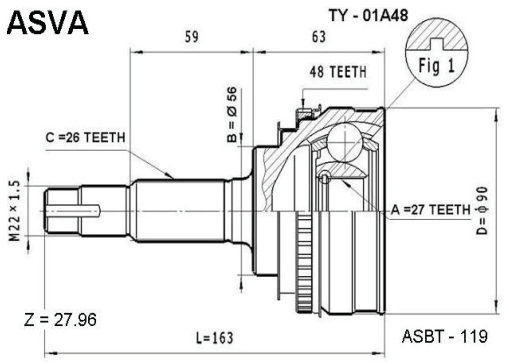

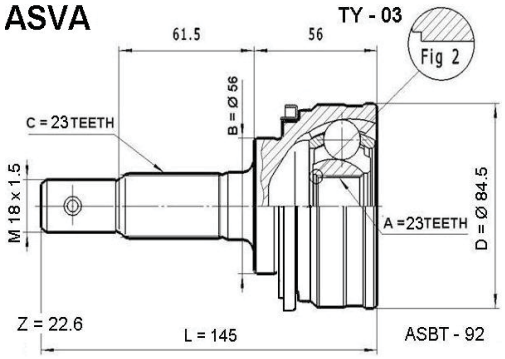

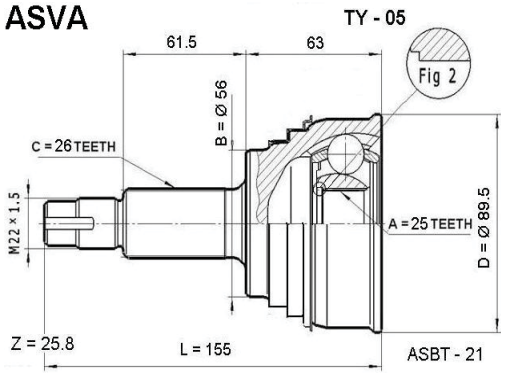

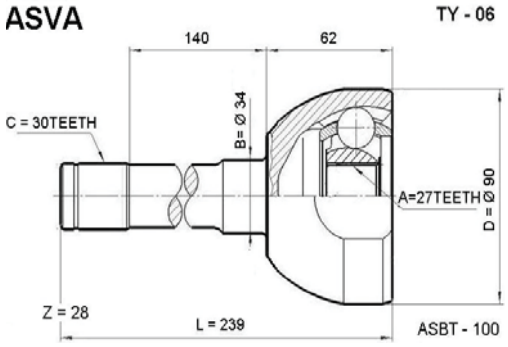

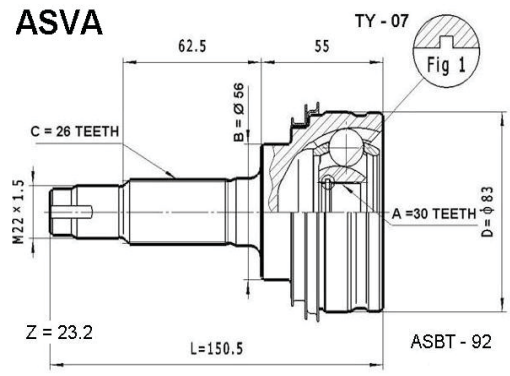

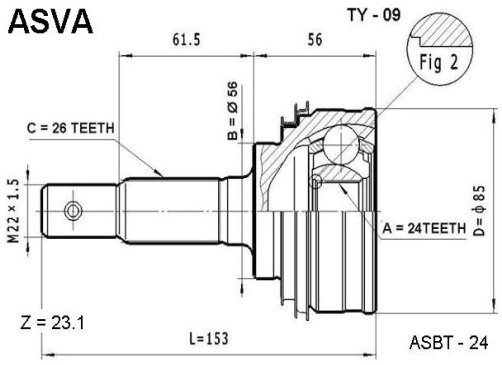

C.V. JOINT OUTER/ ШРУС НАРУЖНИЙ

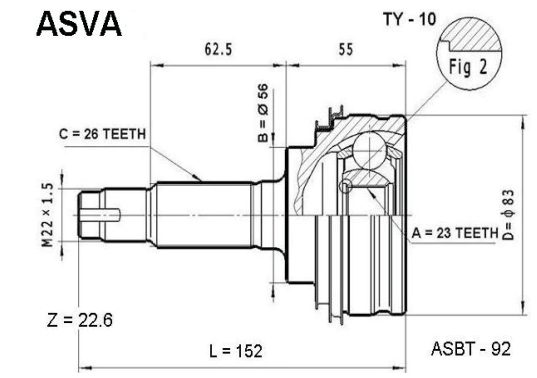

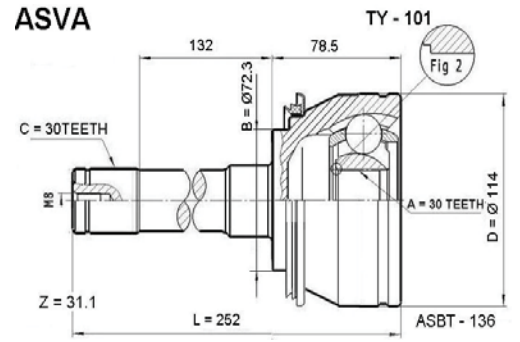

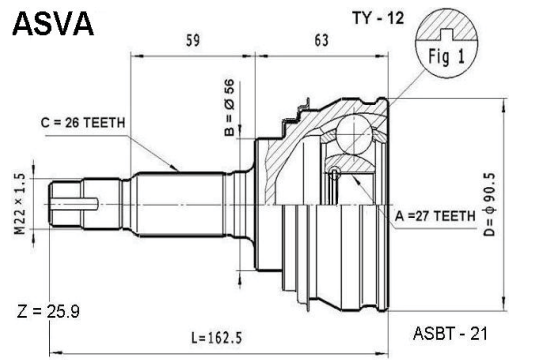

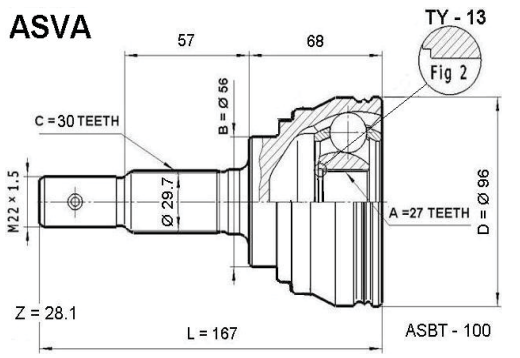

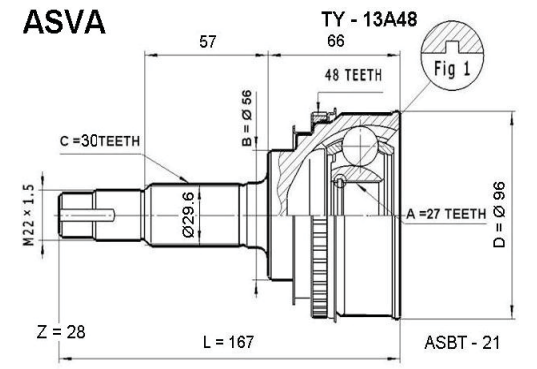

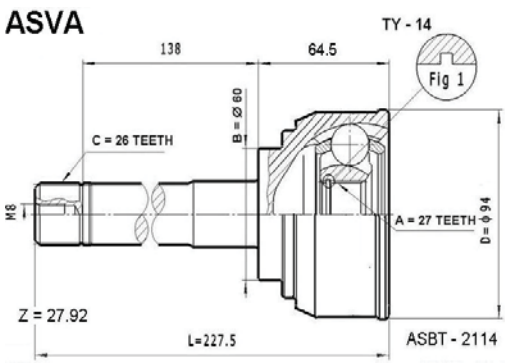

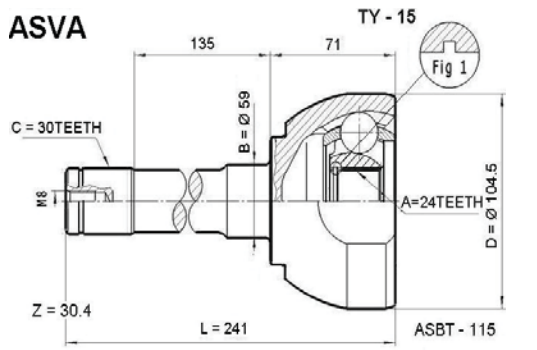

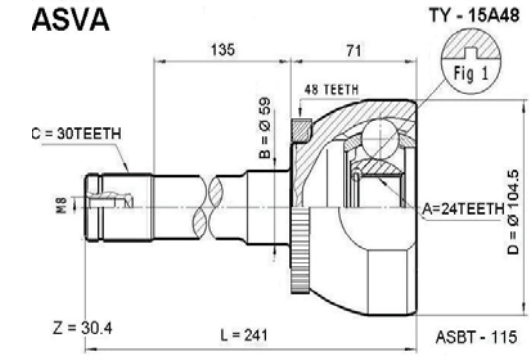

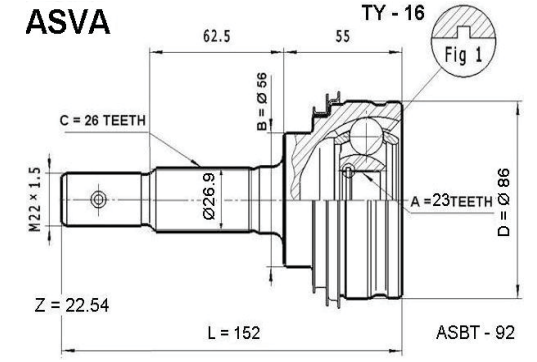

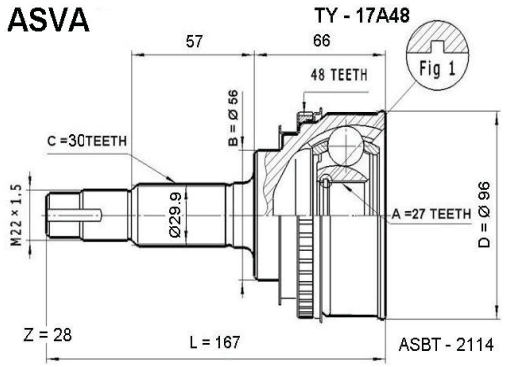

C.V. JOINT OUTER/ ШРУС НАРУЖНИЙ

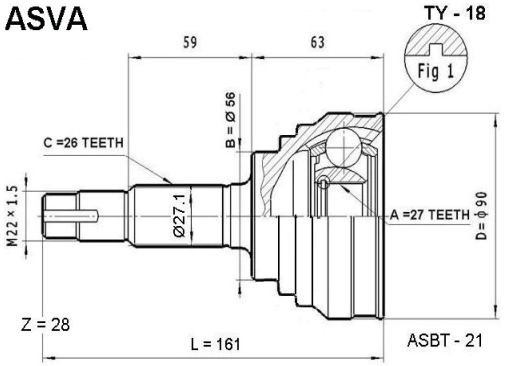

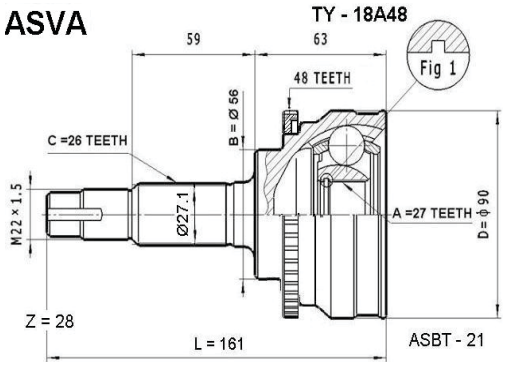

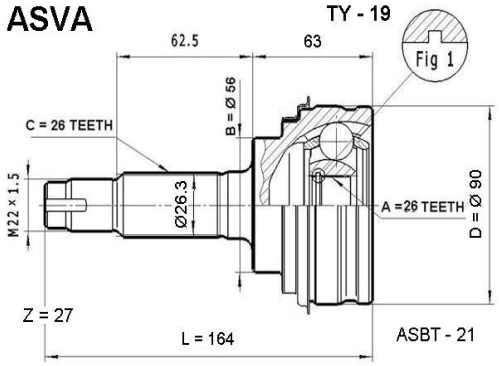

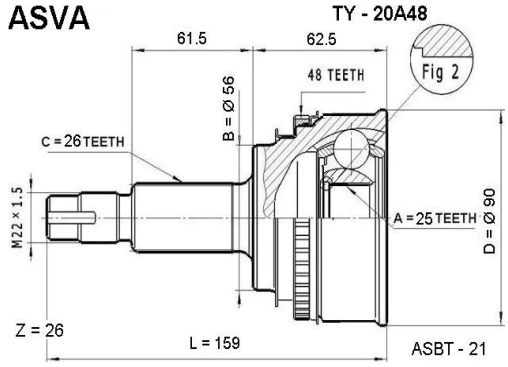

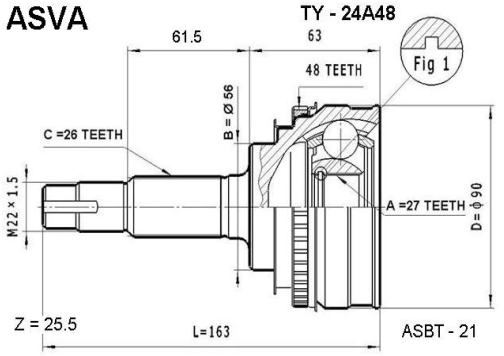

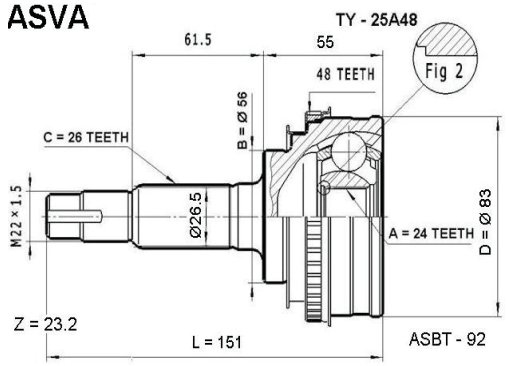

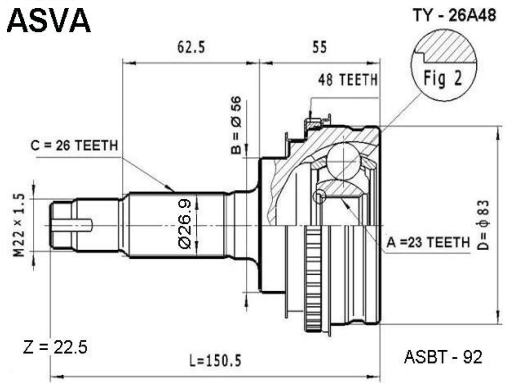

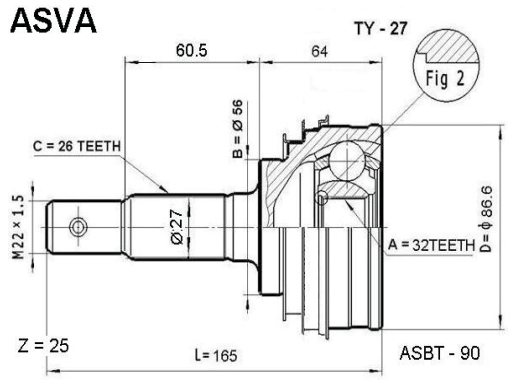

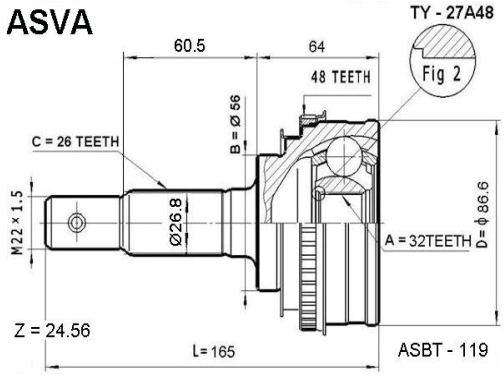

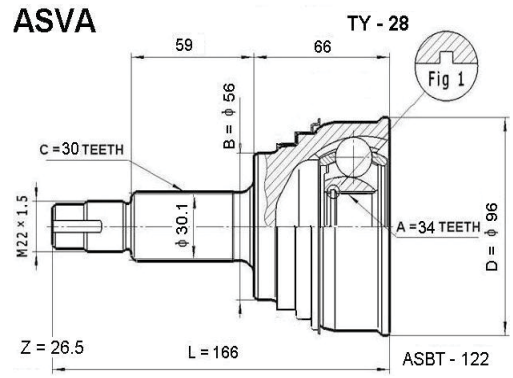

C.V. JOINT OUTER/ ШРУС НАРУЖНИЙ

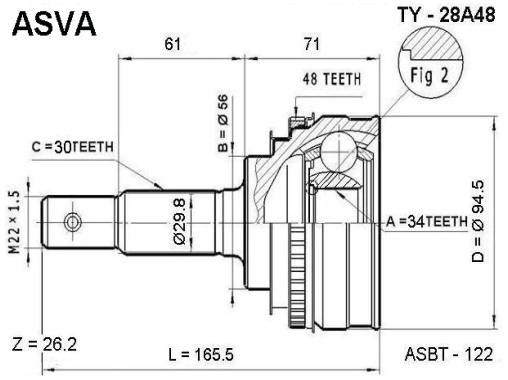

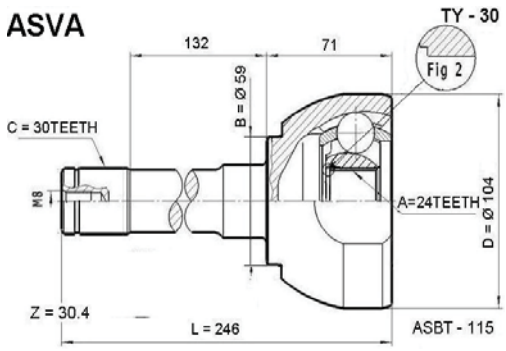

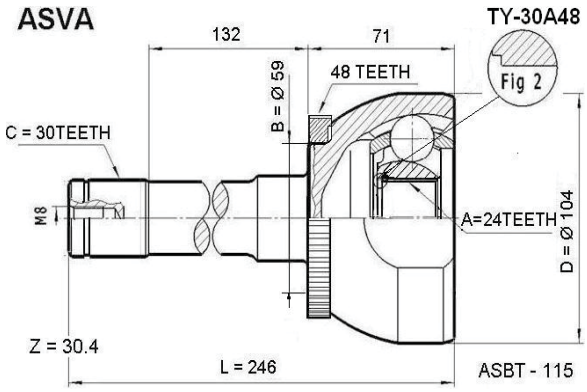

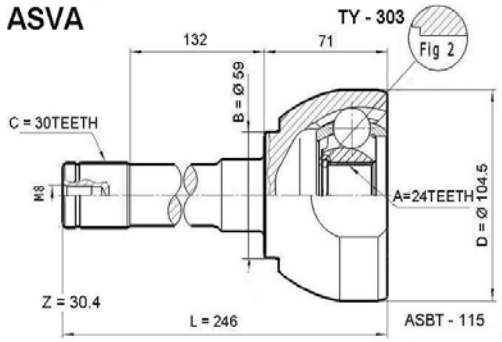

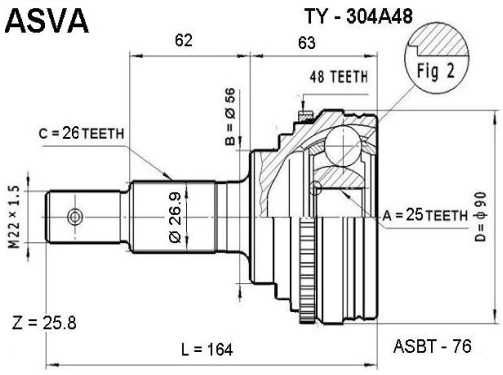

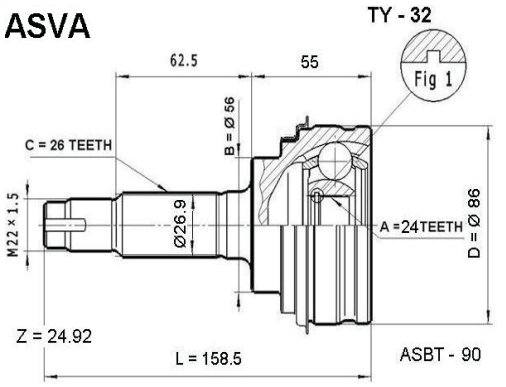

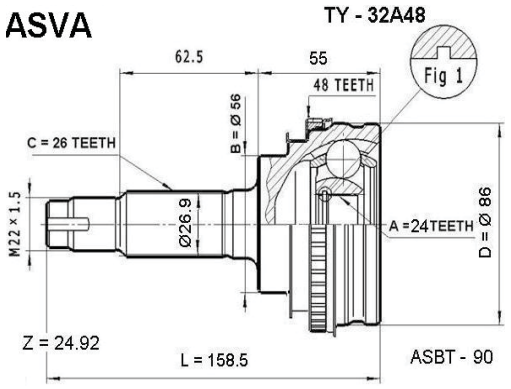

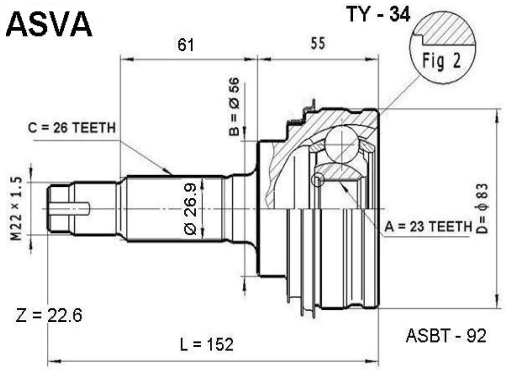

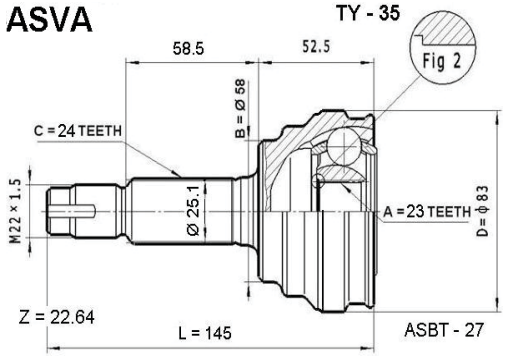

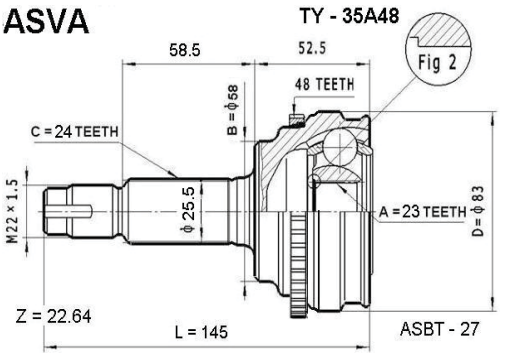

C.V. JOINT OUTER/ ШРУС НАРУЖНИЙ

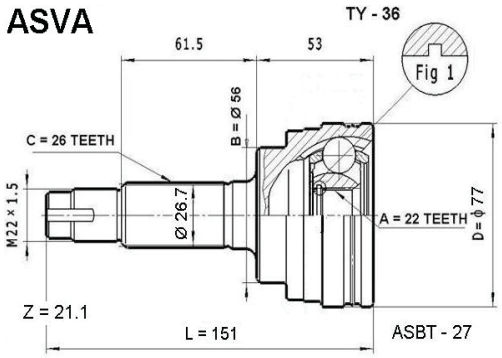

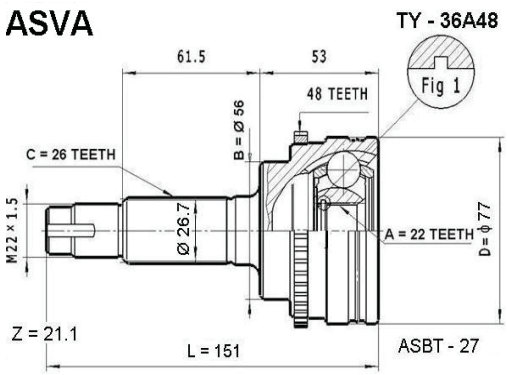

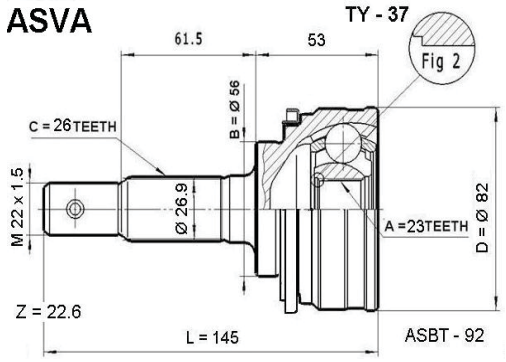

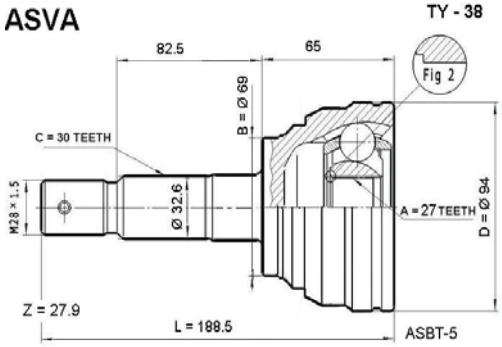

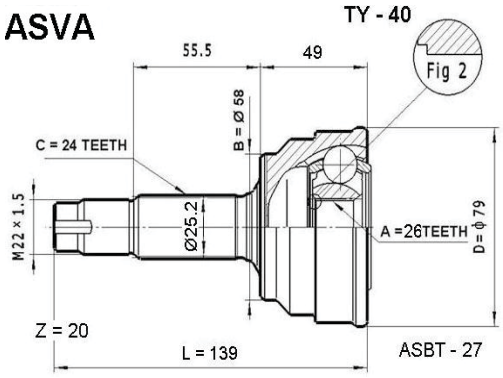

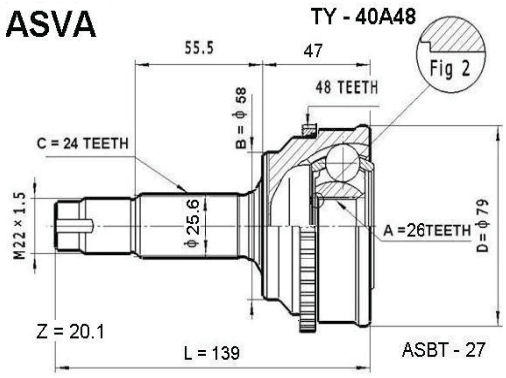

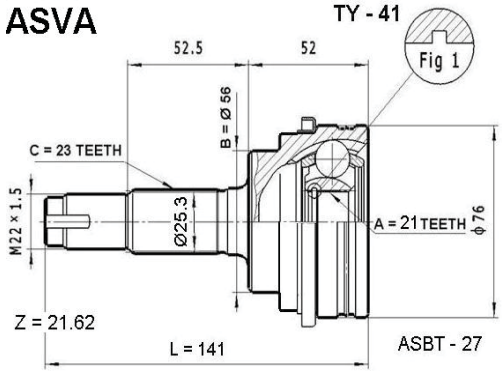

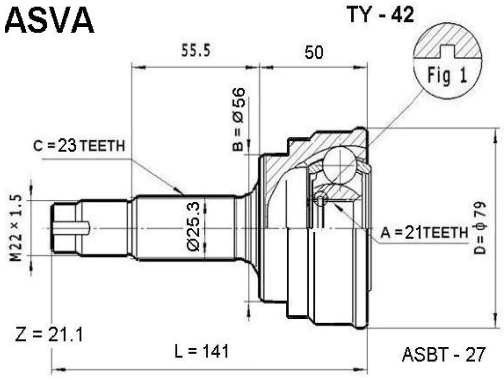

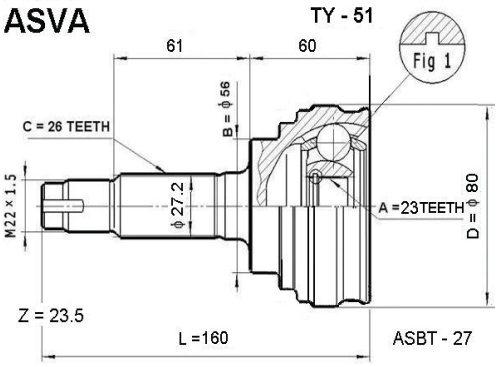

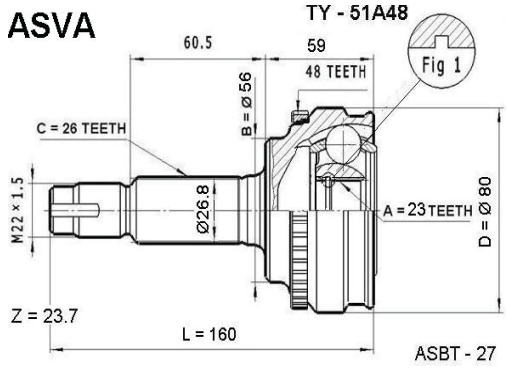

C.V. JOINT OUTER/ ШРУС НАРУЖНИЙ

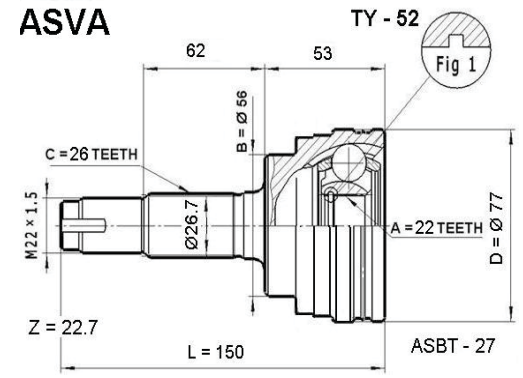

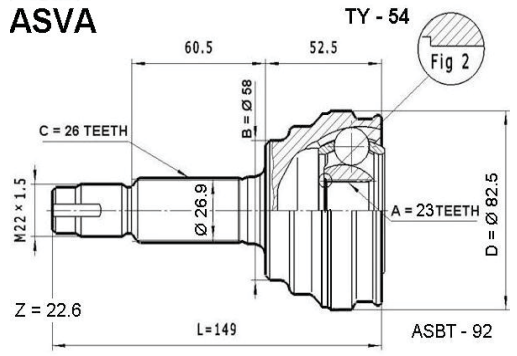

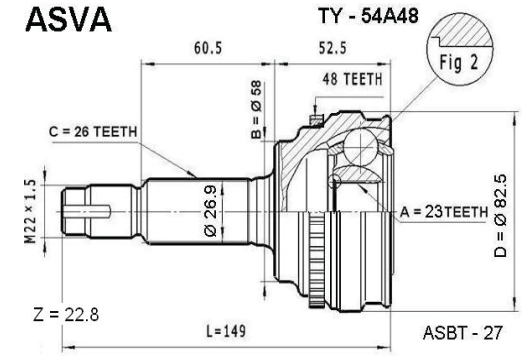

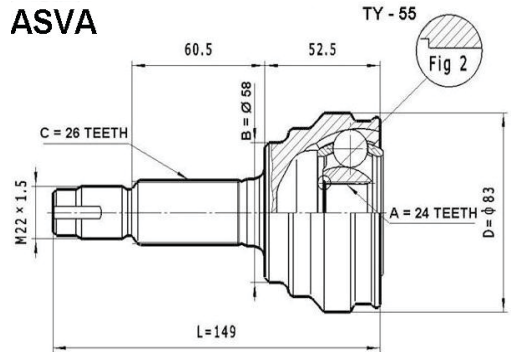

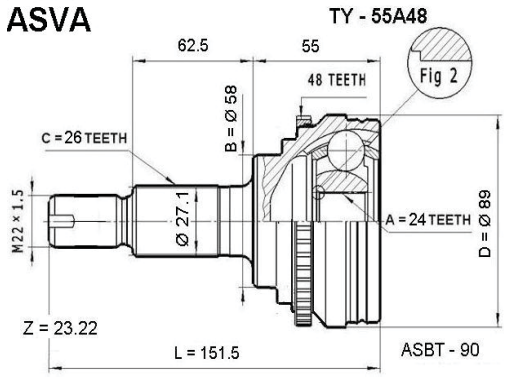

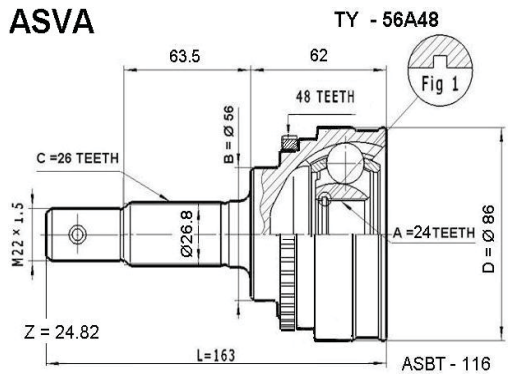

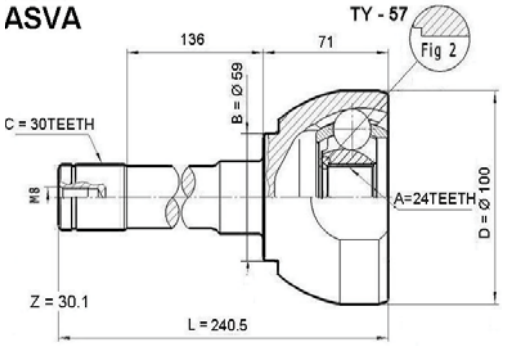

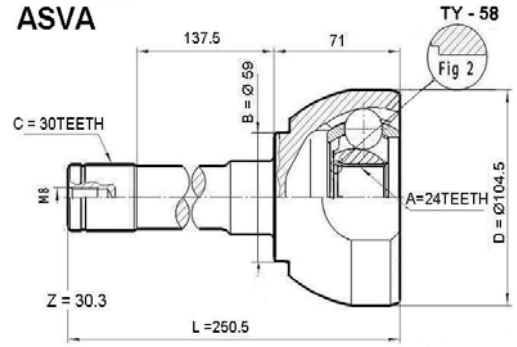

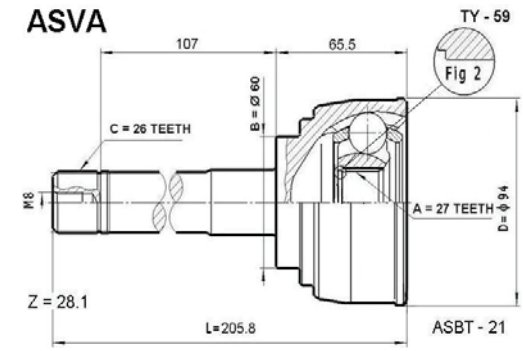

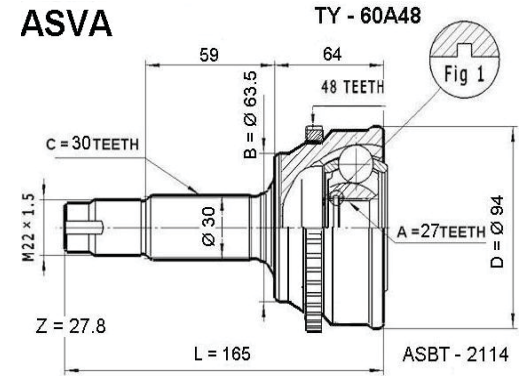

C.V. JOINT OUTER/ ШРУС НАРУЖНИЙ

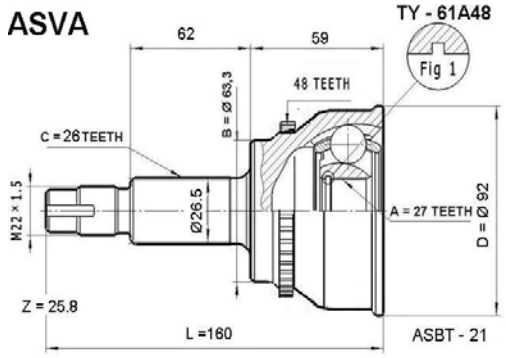

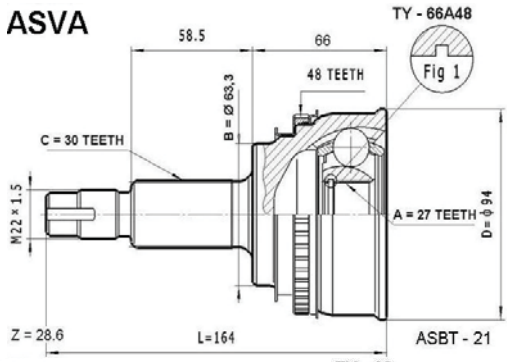

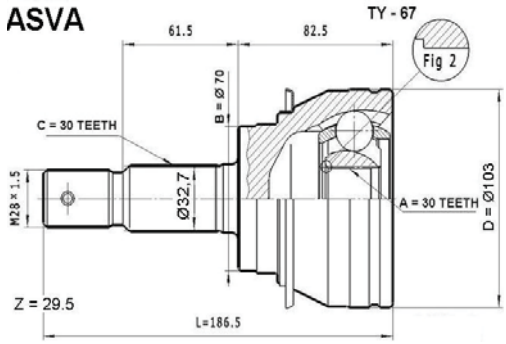

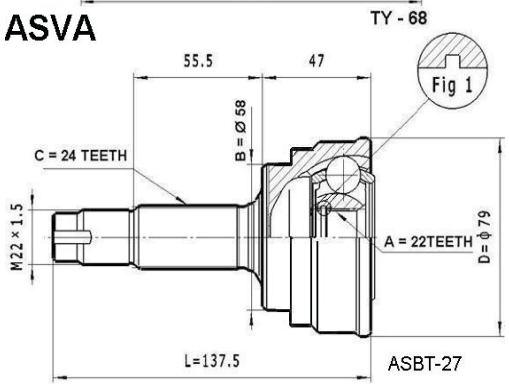

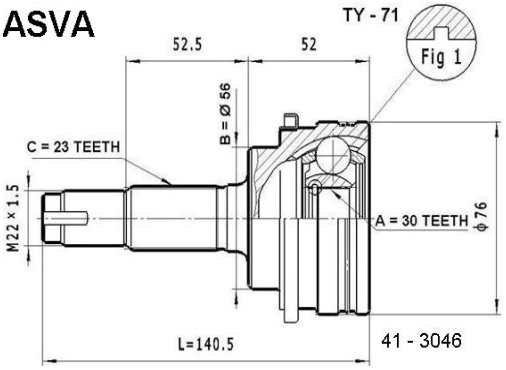

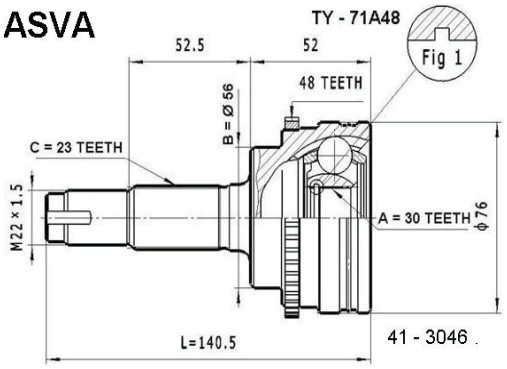

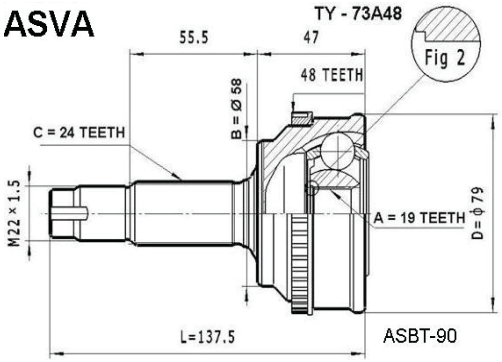

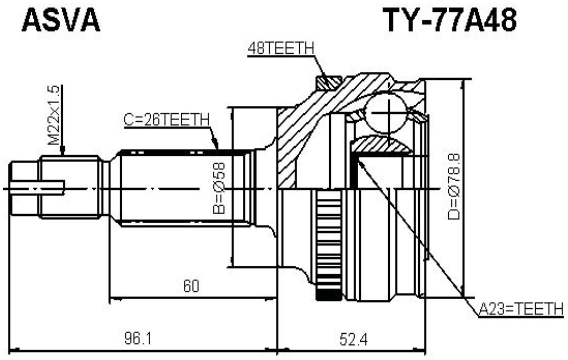

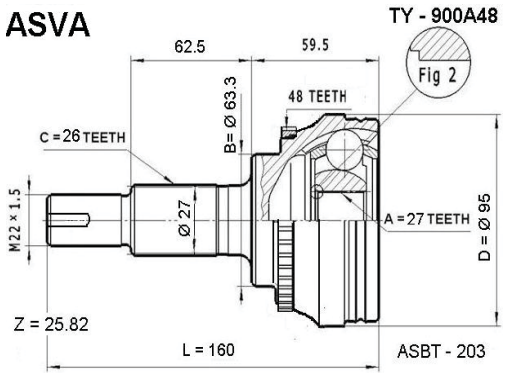

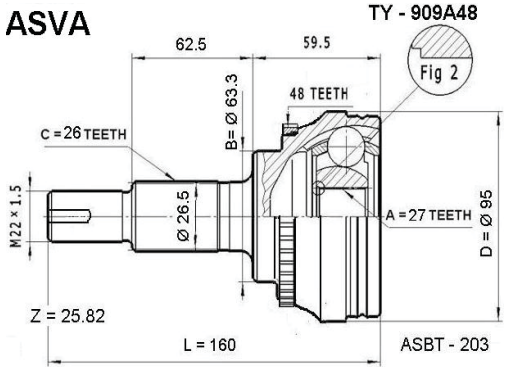

C.V. JOINT OUTER/ ШРУС НАРУЖНИЙ

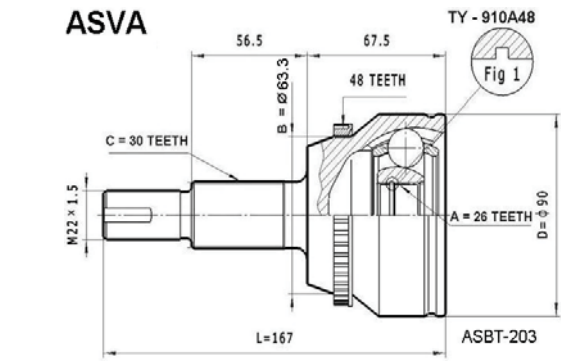

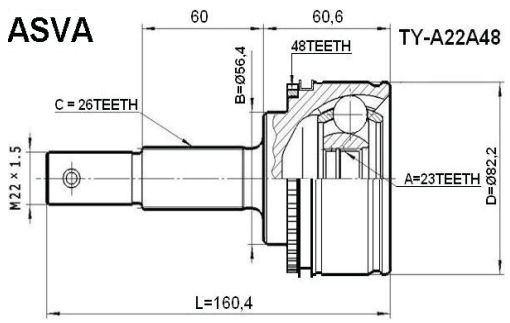

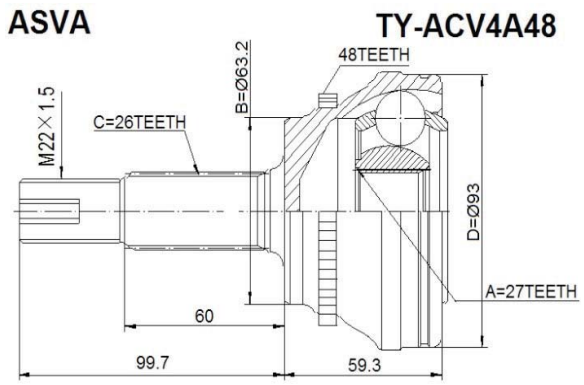

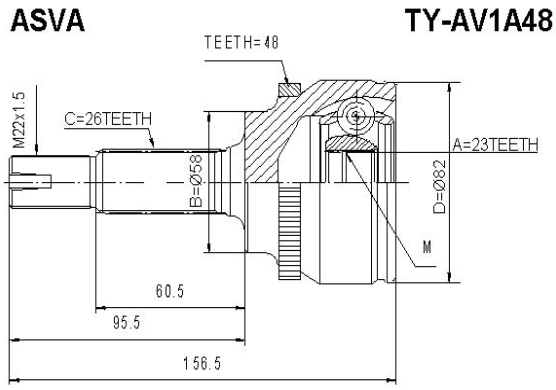

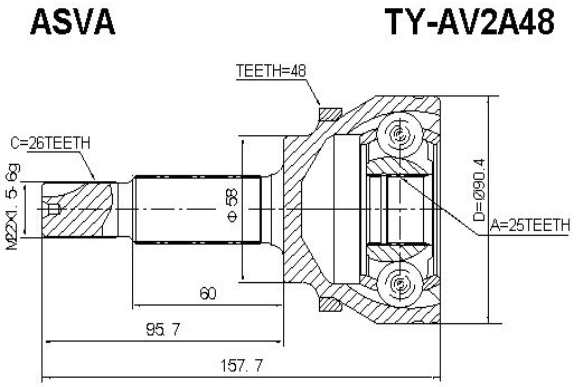

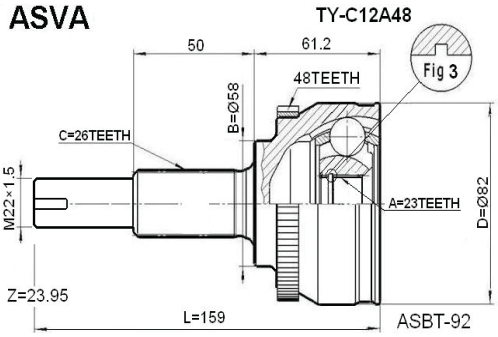

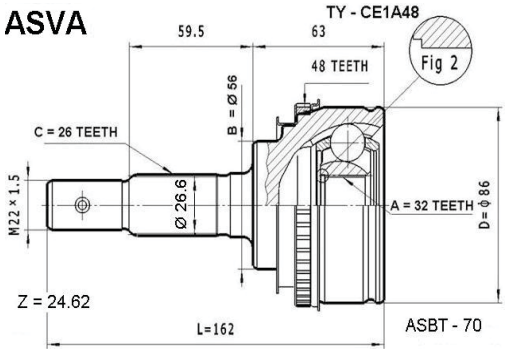

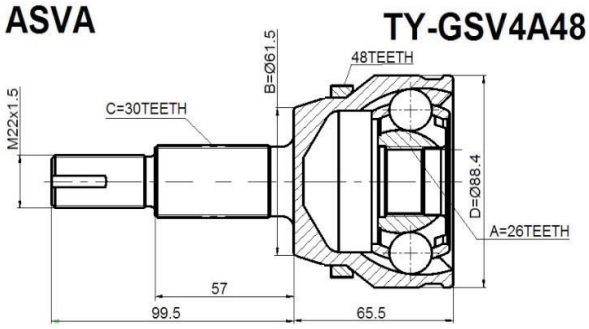

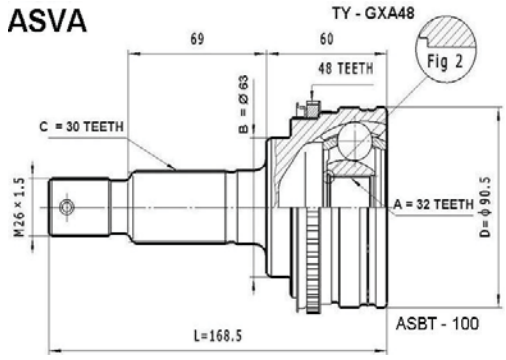

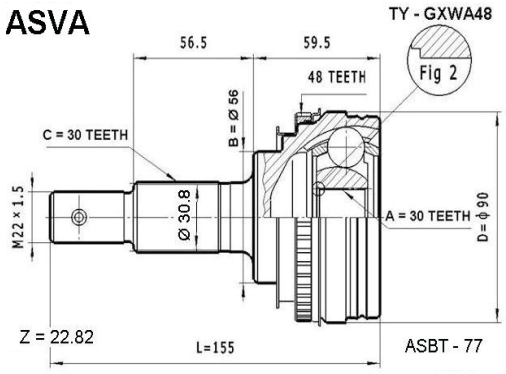

C.V. JOINT OUTER/ ШРУС НАРУЖНИЙ

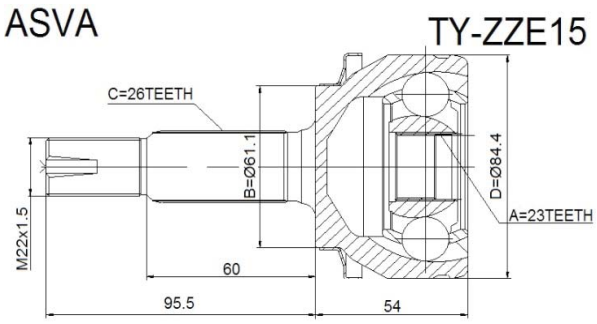

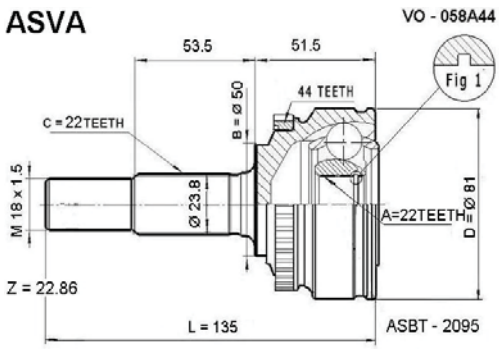

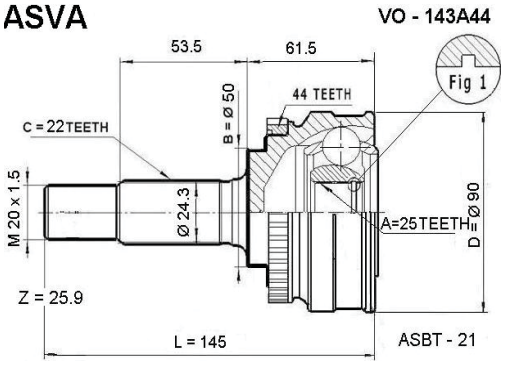

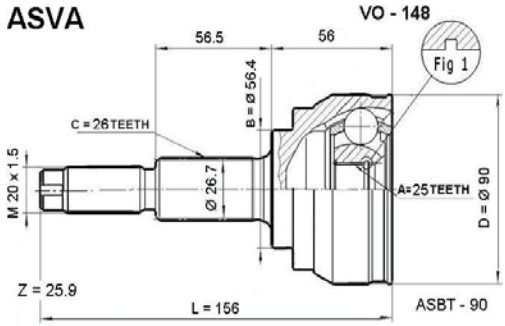

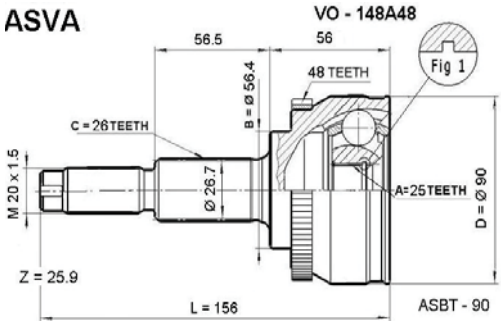

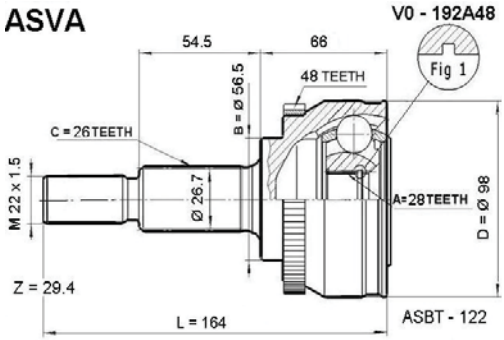

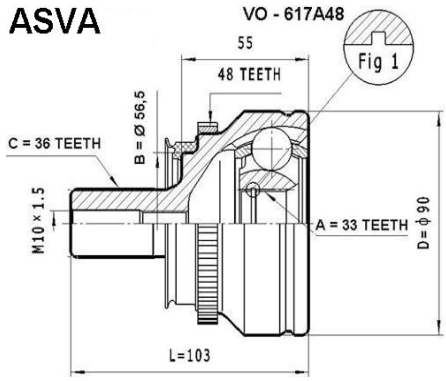

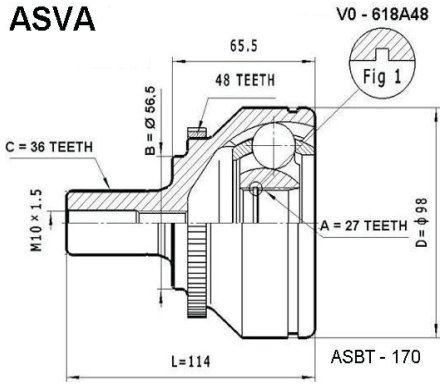

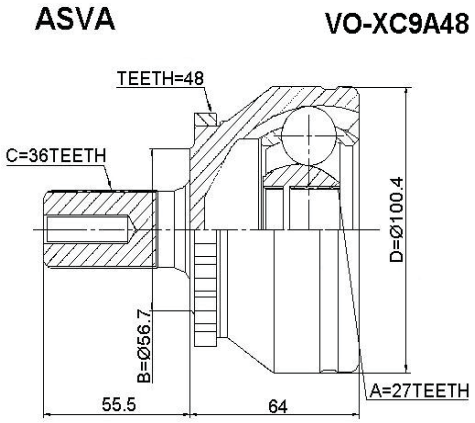

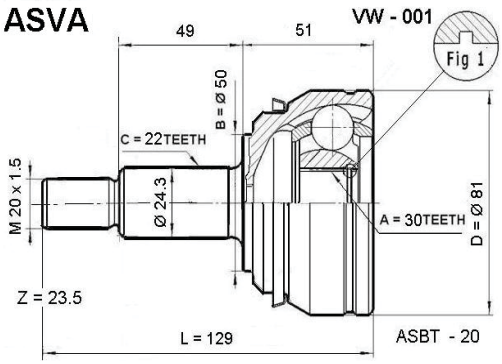

C.V. JOINT OUTER/ ШРУС НАРУЖНИЙ

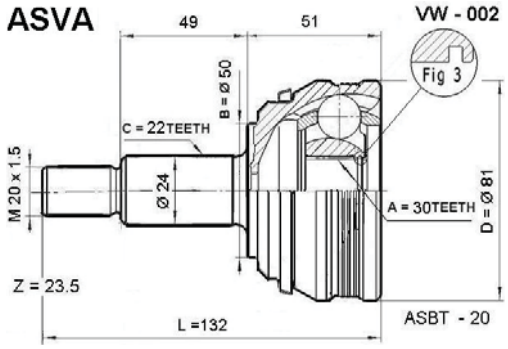

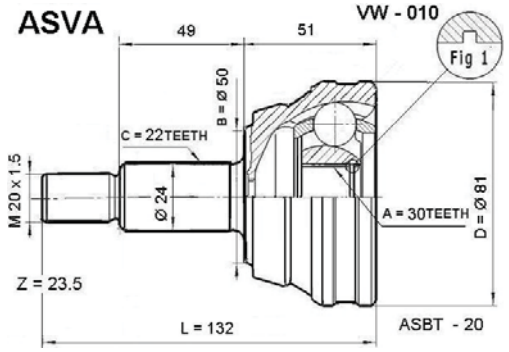

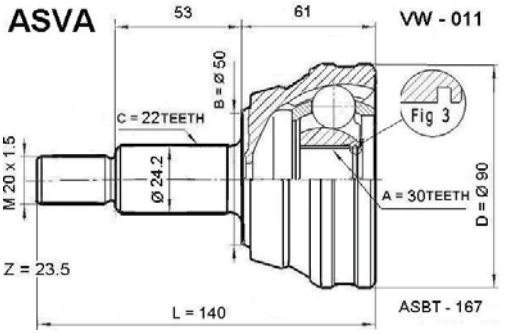

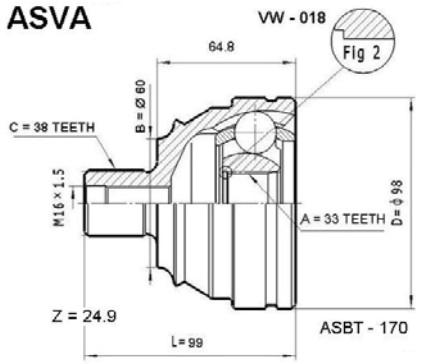

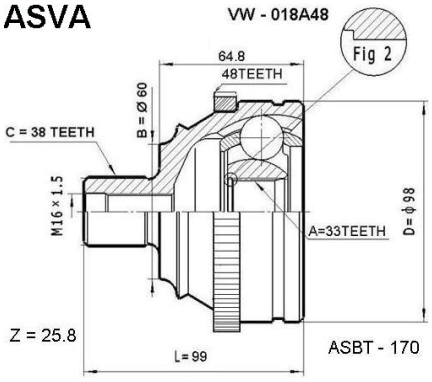

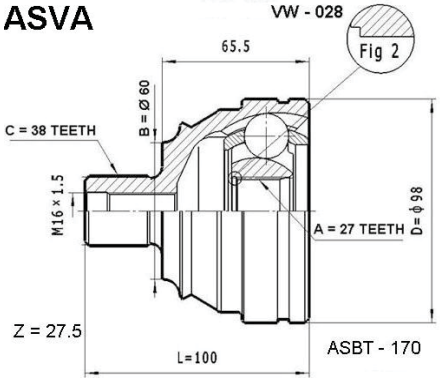

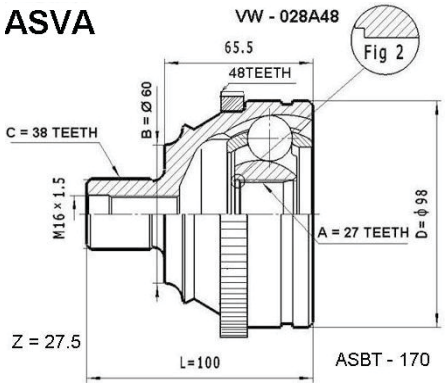

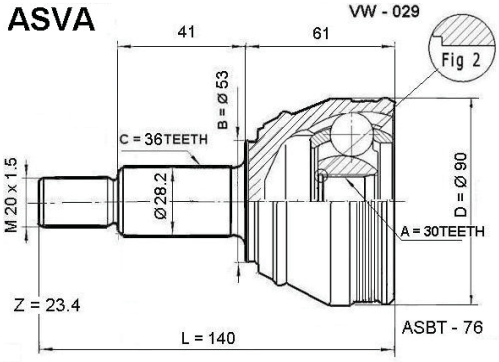

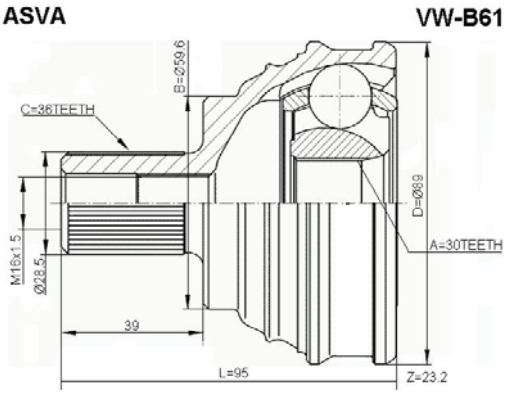

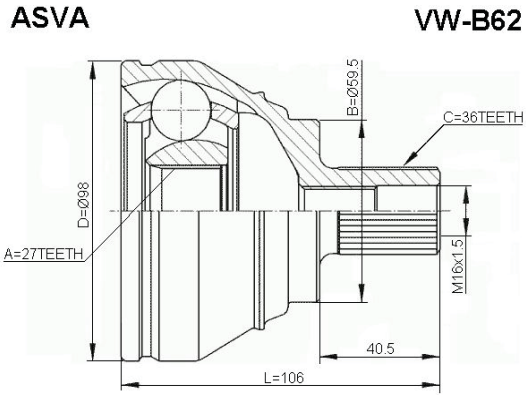

C.V. JOINT OUTER/ ШРУС НАРУЖНИЙ

ASVA **VW-T51**

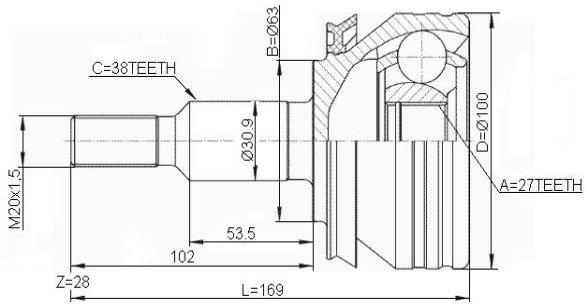

ASVA **VW-T52**

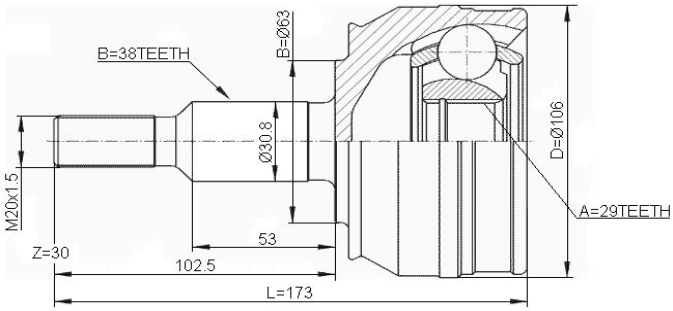

ASVA **VW-TG**

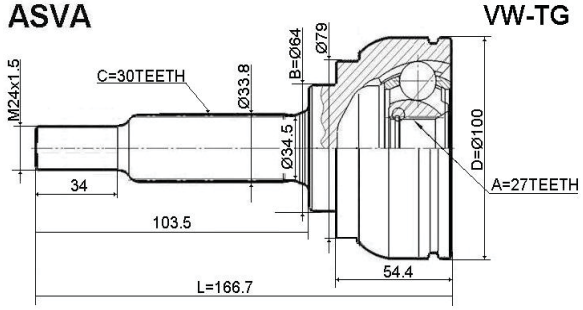

C.V. JOINT INNER/ ШРУС ВНУТРЕННИЙ

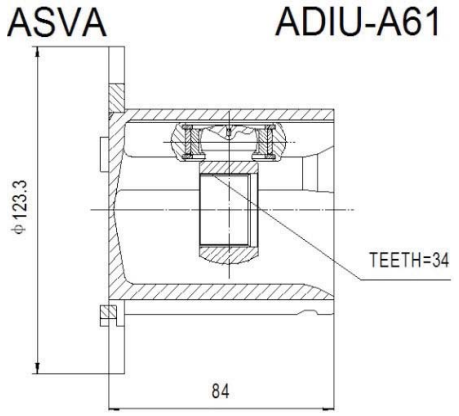

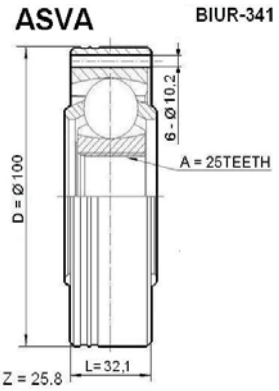

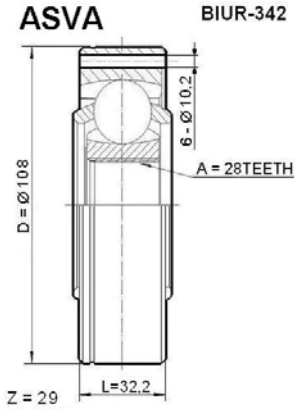

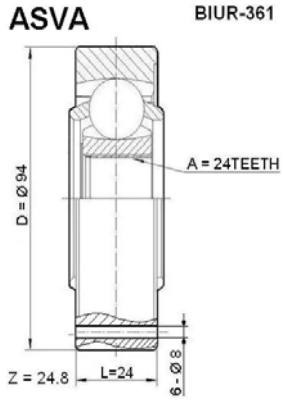

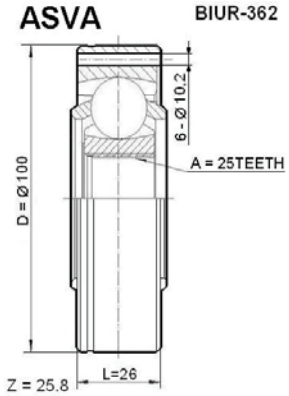

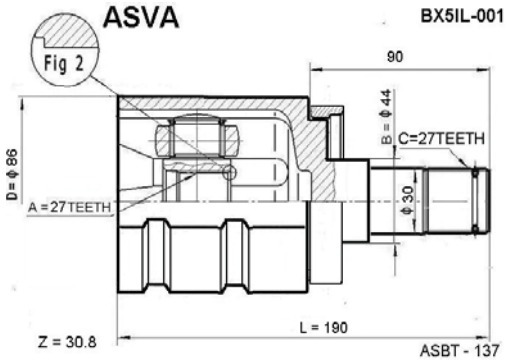

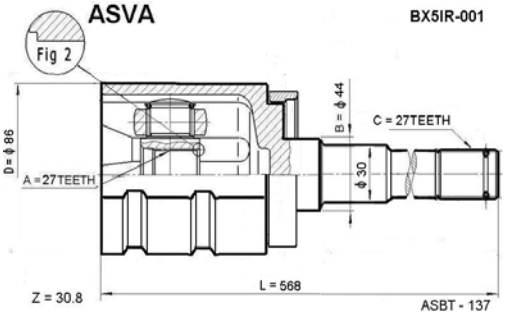

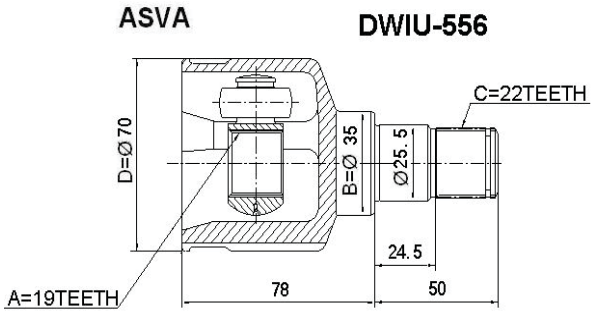

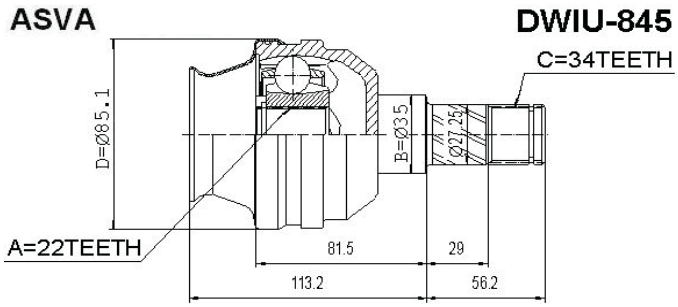

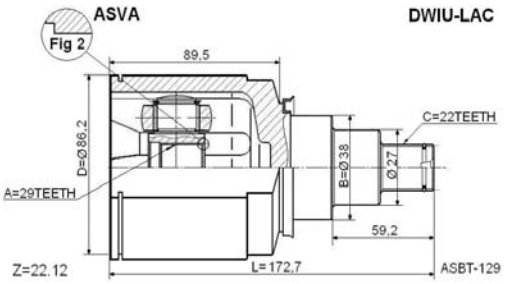

C.V. JOINT INNER/ ШРУС ВНУТРЕННИЙ

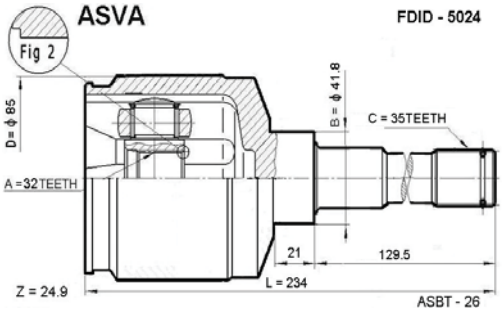

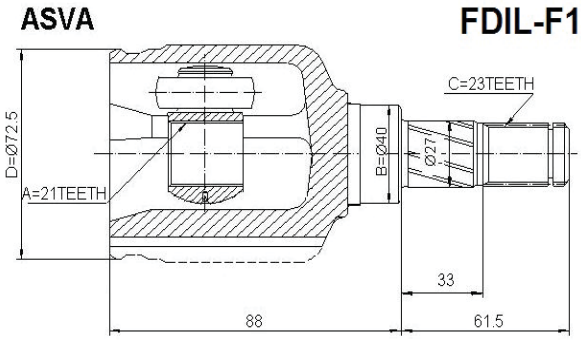

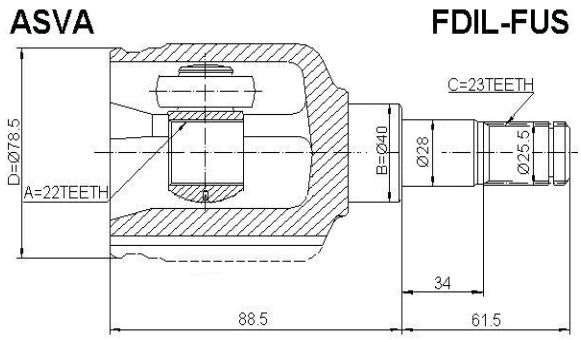

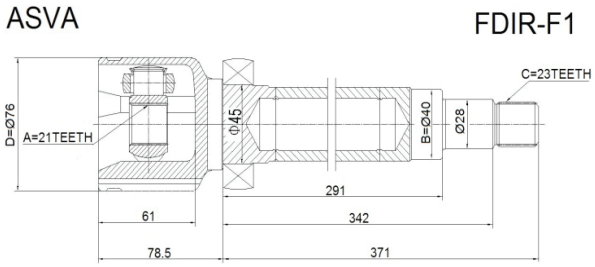

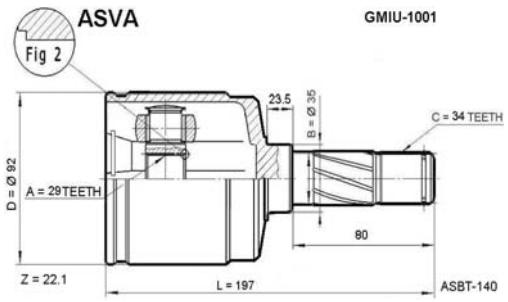

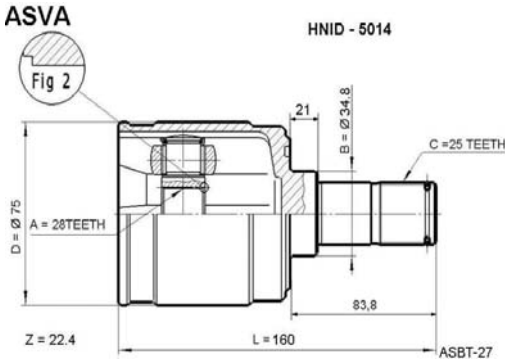

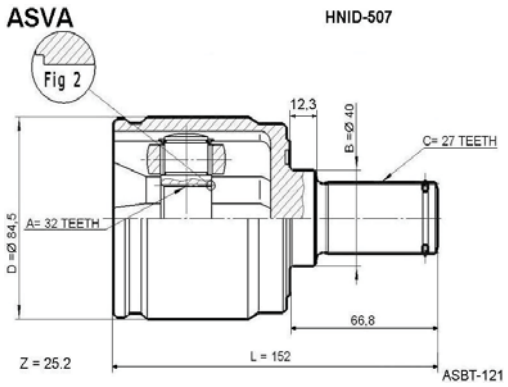

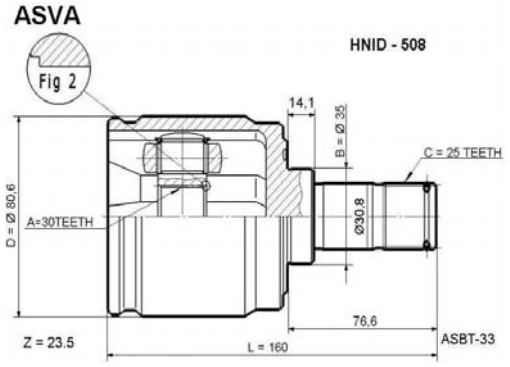

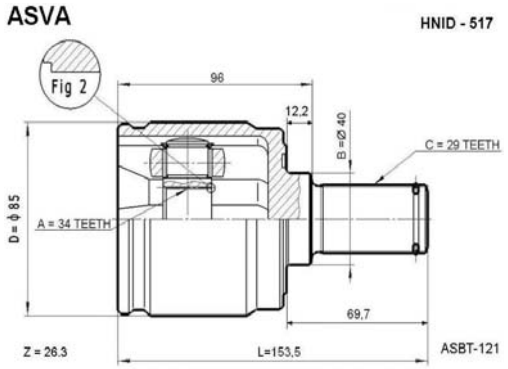

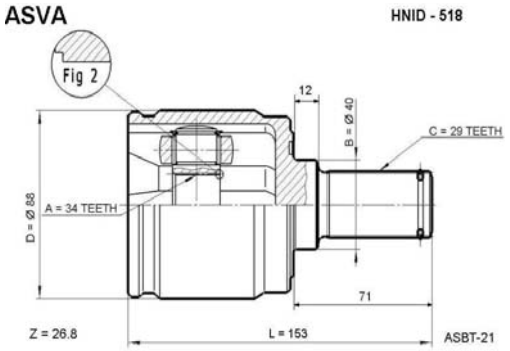

C.V. JOINT INNER/ ШРУС ВНУТРЕННИЙ

ASVA HNID - 550

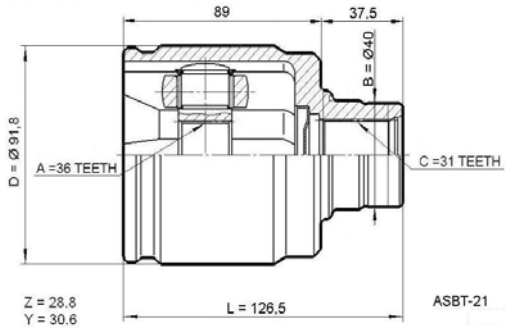

ASVA HNID - U10

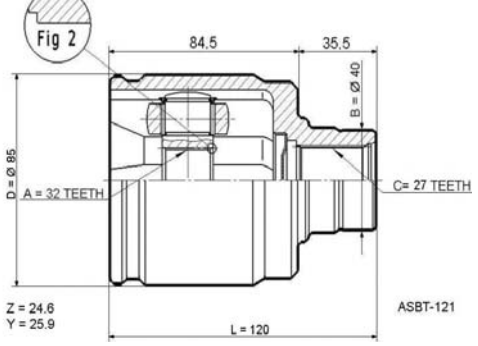

ASVA HNIL-ACL

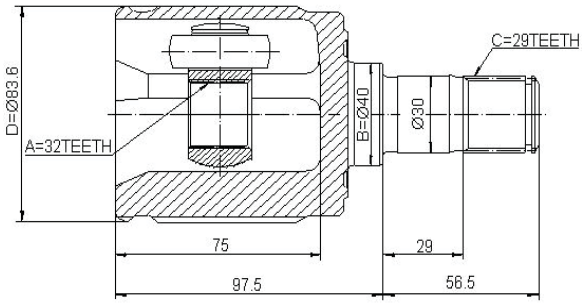

ASVA HNIL-C7A

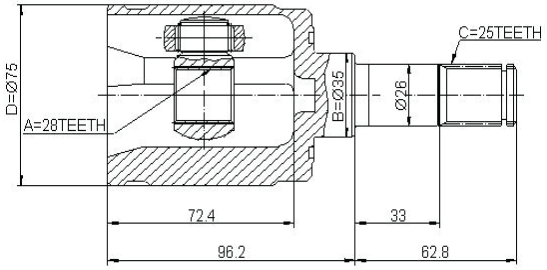

ASVA HNIL-C7M

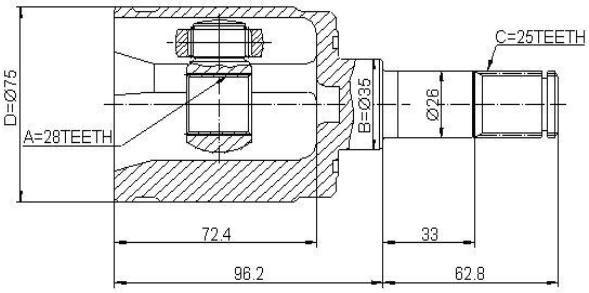

ASVA HNIL-JZ

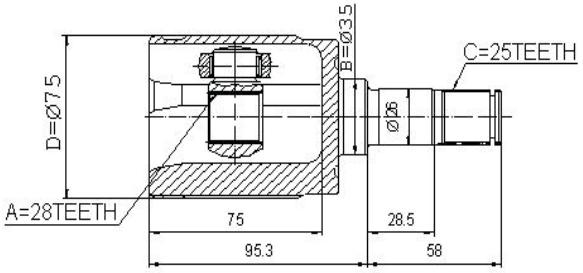

ASVA HNIP - 5015

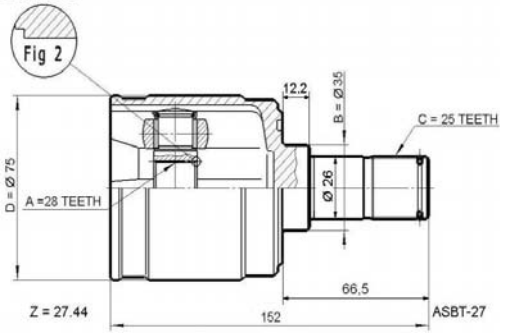

ASVA HNIP - 509

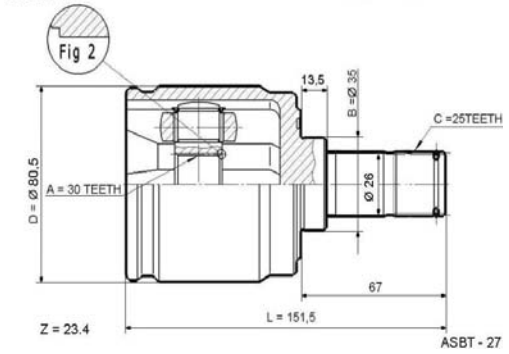

ASVA HNIP - 516

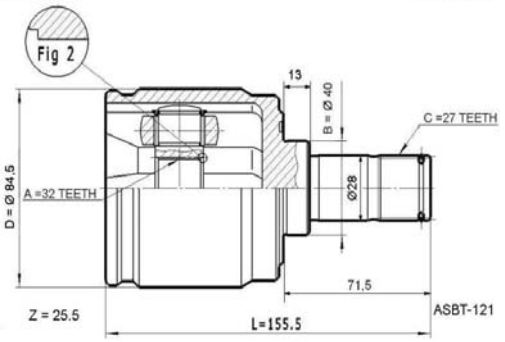

ASVA HNIP - 551

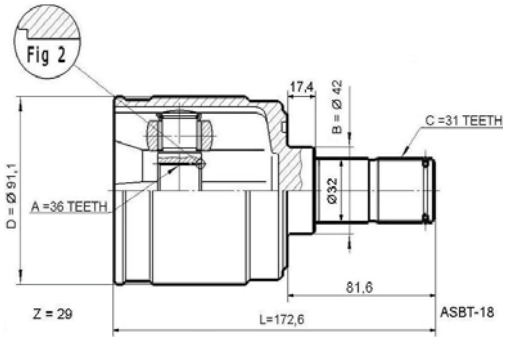

C.V. JOINT INNER/ ШРУС ВНУТРЕННИЙ

ASVA HNIP - A12

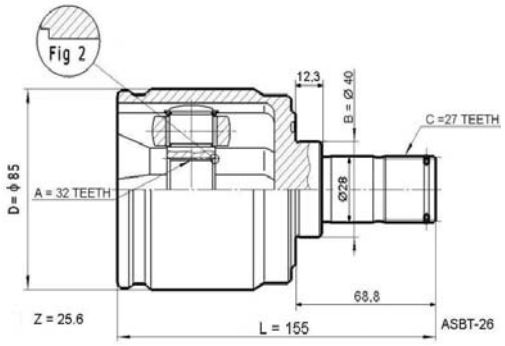

ASVA HNIP - HRVA

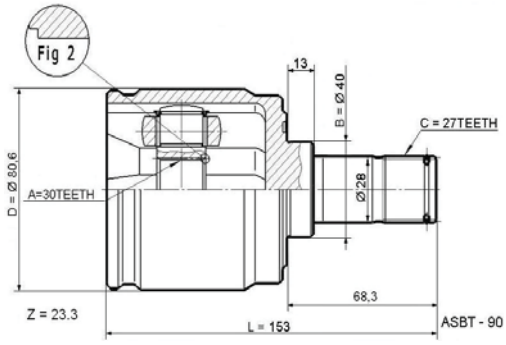

ASVA HNIP - HRVM

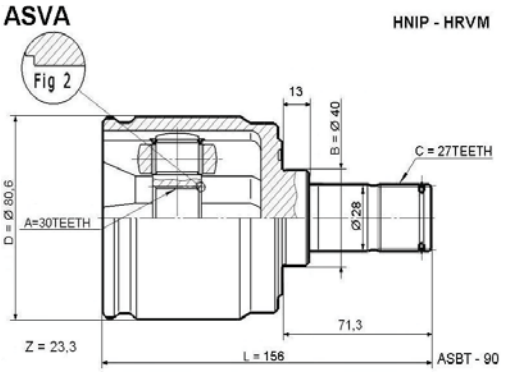

ASVA HNIP - M11

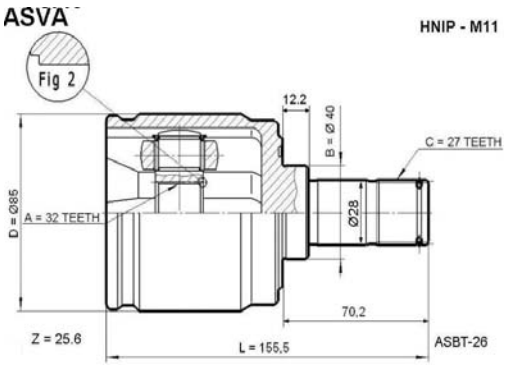

ASVA HNIR-507R

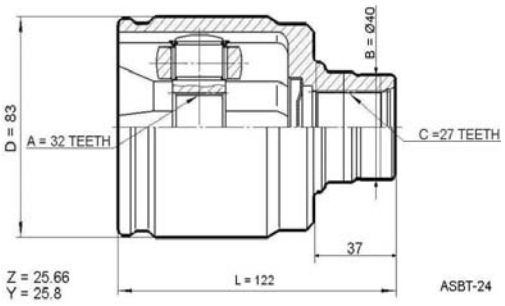

ASVA HNIR-ACL

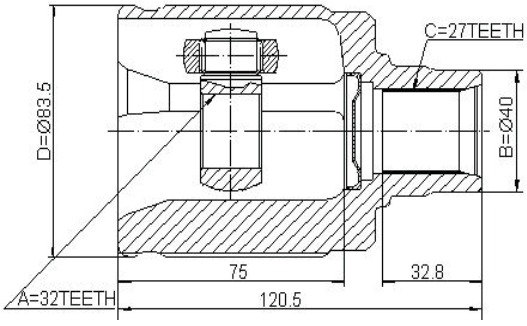

ASVA HNIU - 5028

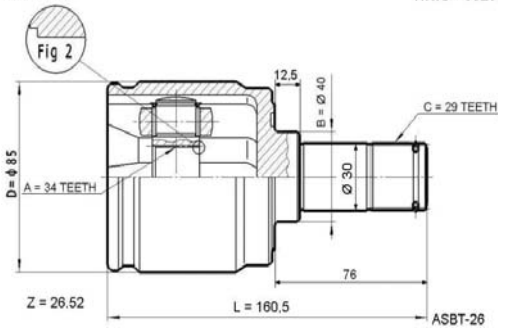

ASVA HNIU - 521

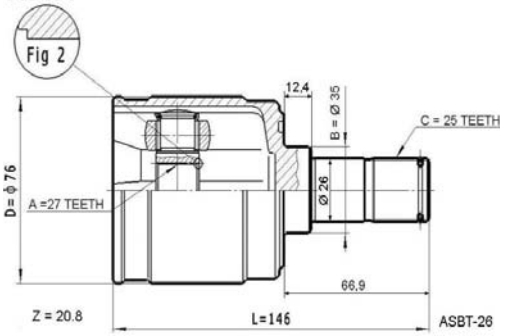

ASVA HNIU - CRV

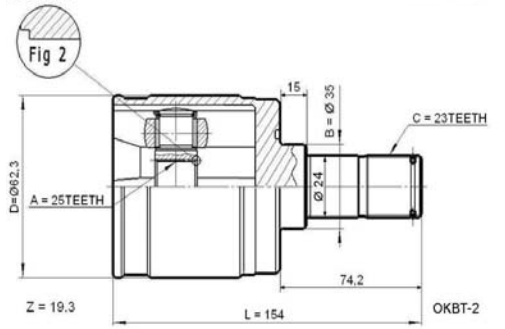

ASVA HNIU - HRV

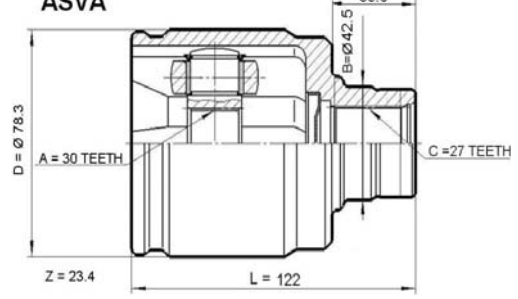

C.V. JOINT INNER/ ШРУС ВНУТРЕННИЙ

ASVA HYIL-ACC

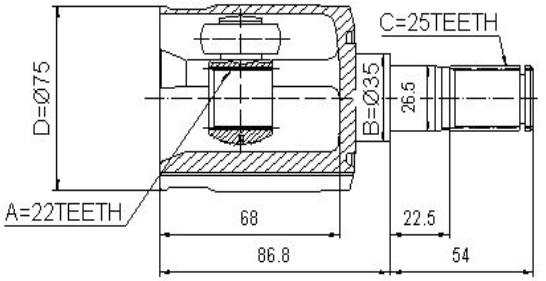

ASVA HYIL-SF

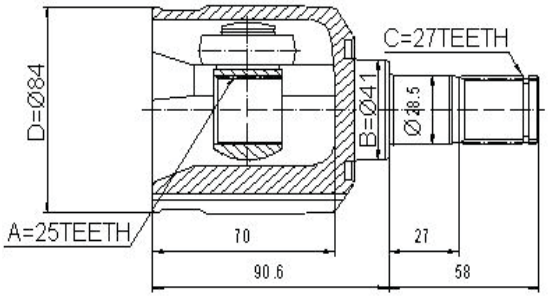

ASVA HYIL-SF2

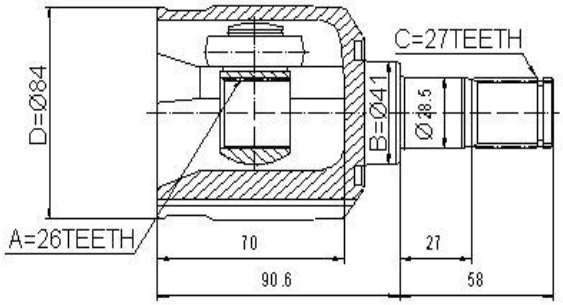

ASVA HYIL-TER2

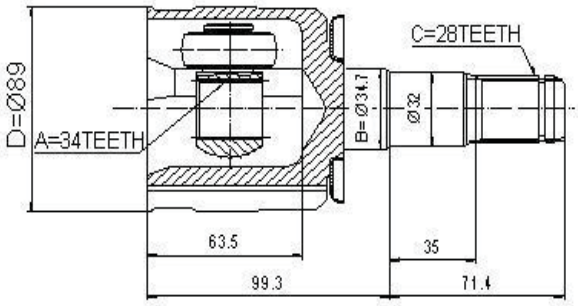

ASVA HYIR-ACC

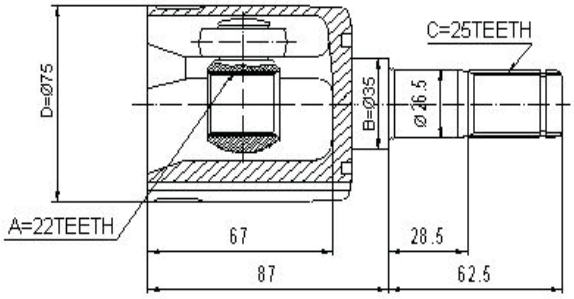

ASVA HYIR-SF

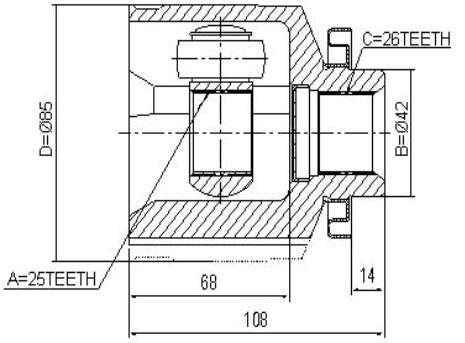

ASVA HYIR-TER2

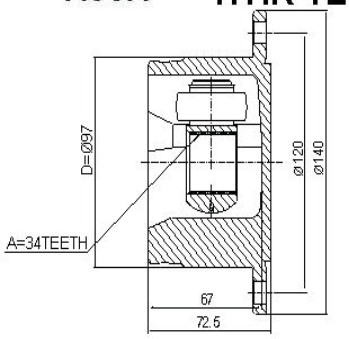

ASVA HYIU-100

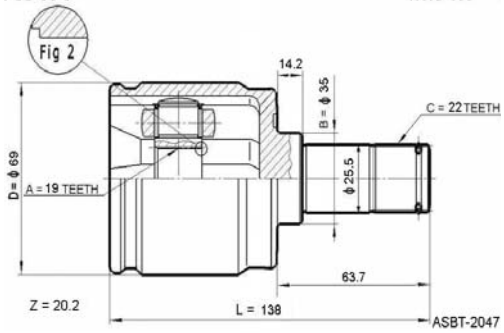

ASVA IZIL - 1004

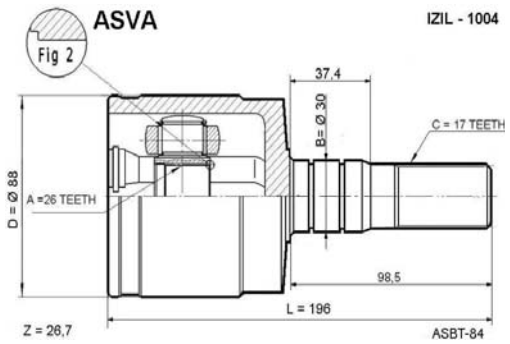

ASVA IZIR-1004

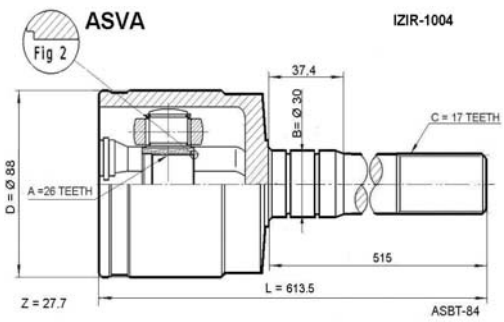

C.V. JOINT INNER/ ШРУС ВНУТРЕННИЙ

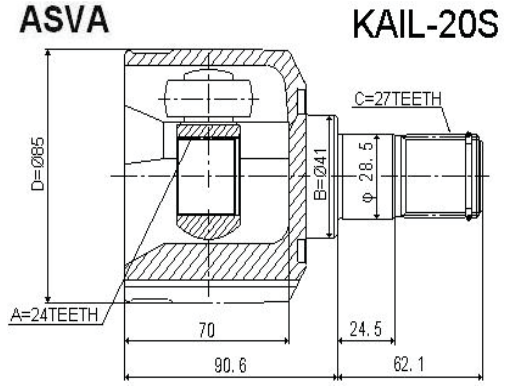

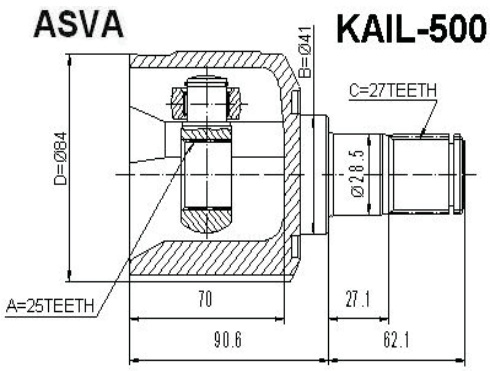

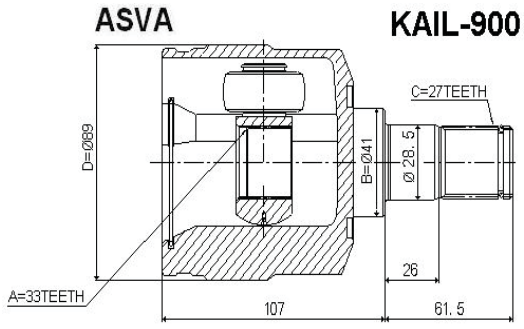

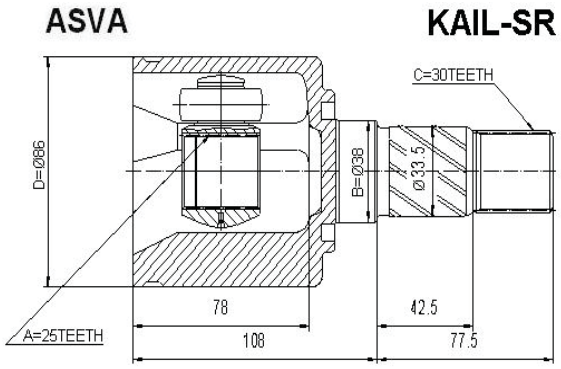

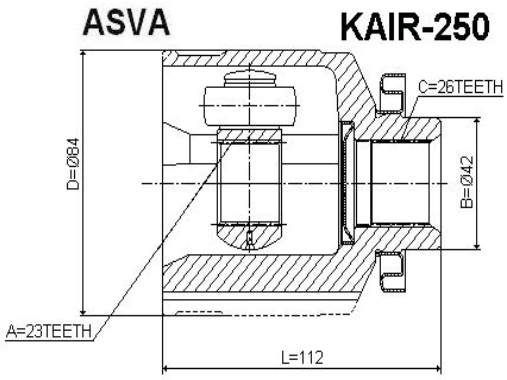

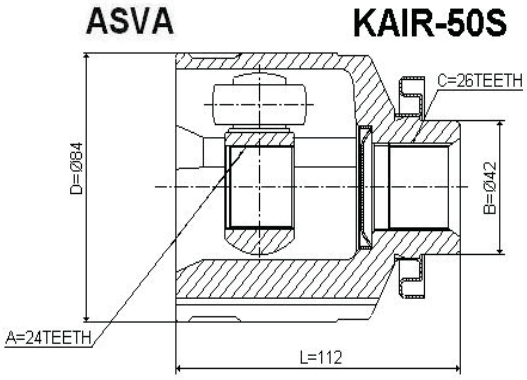

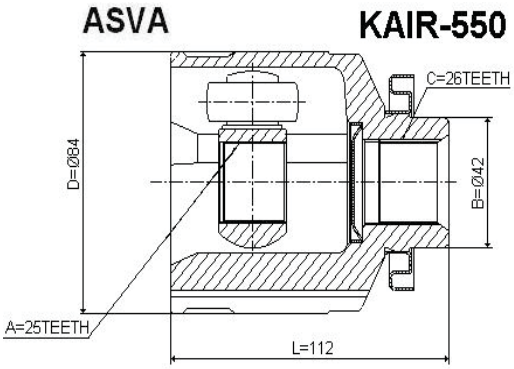

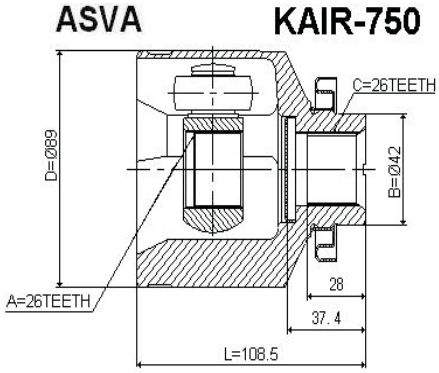

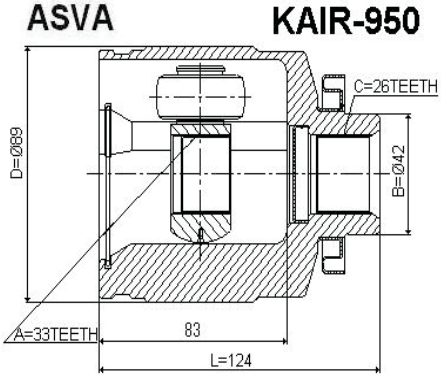

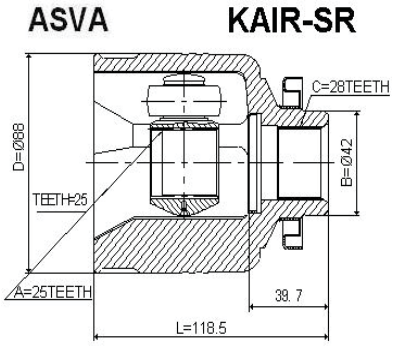

C.V. JOINT INNER/ ШРУС ВНУТРЕННИЙ

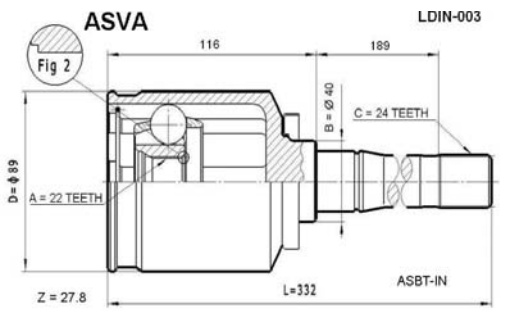

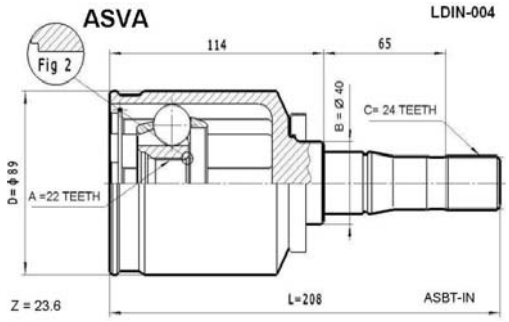

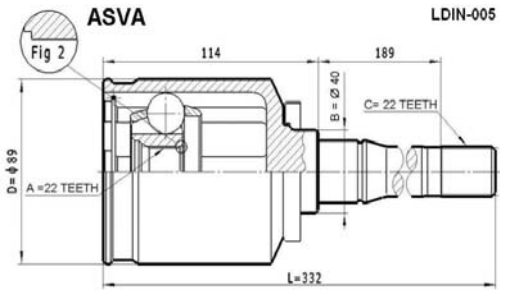

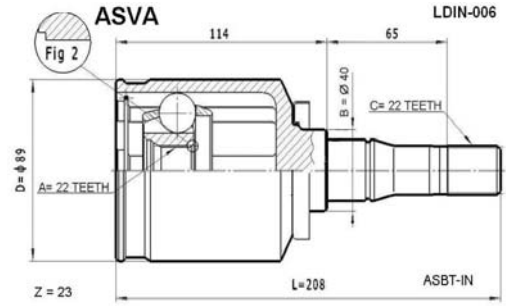

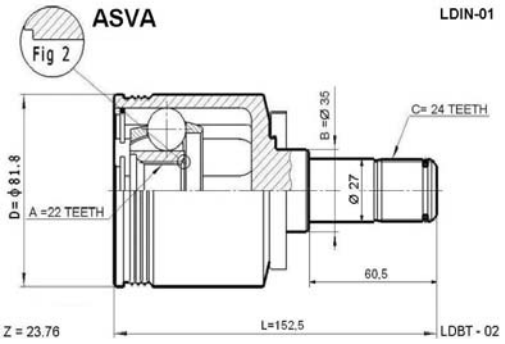

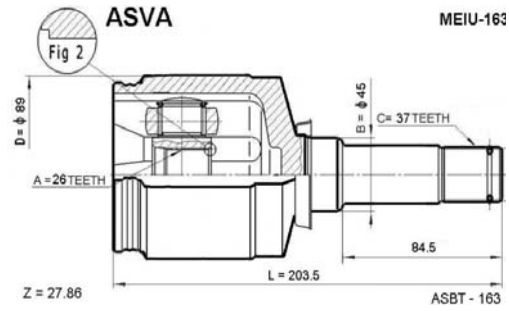

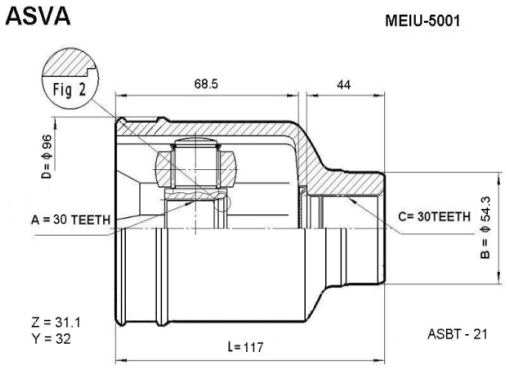

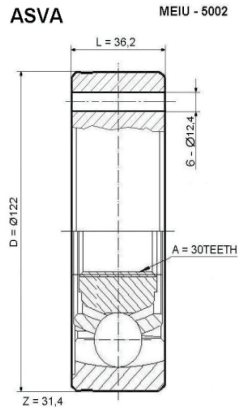

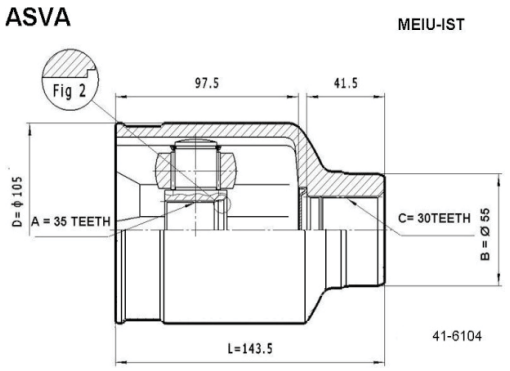

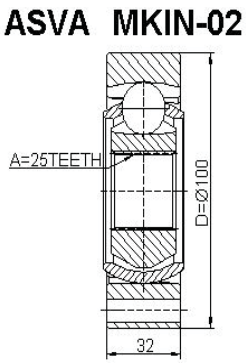

C.V. JOINT INNER/ ШРУС ВНУТРЕННИЙ

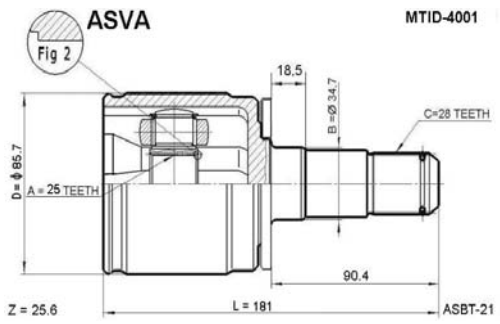

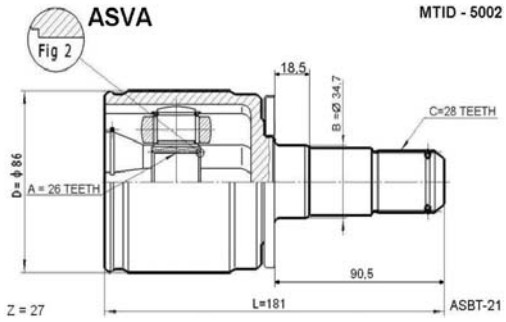

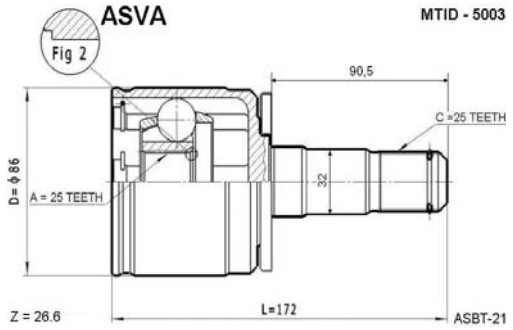

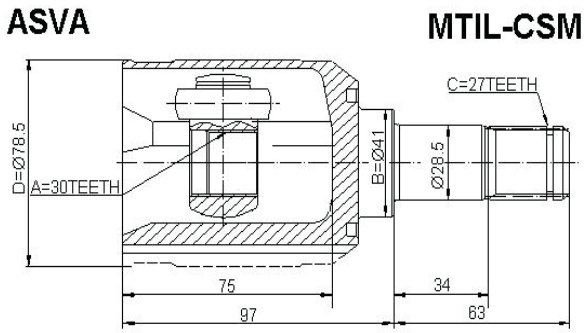

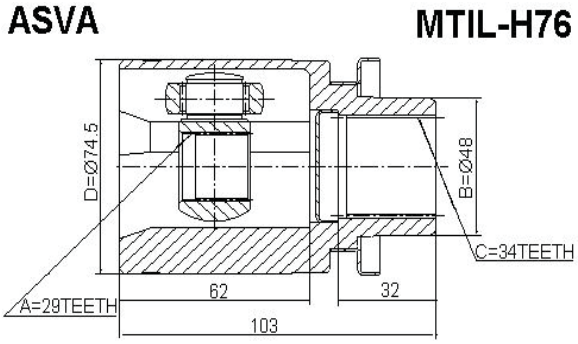

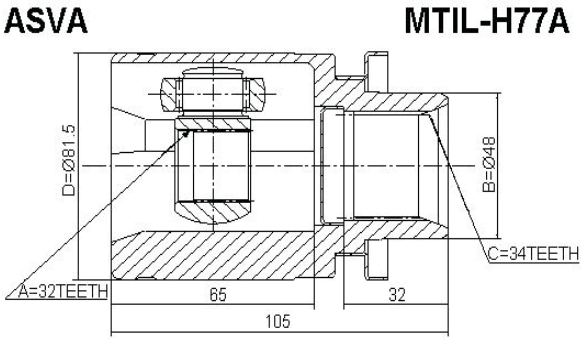

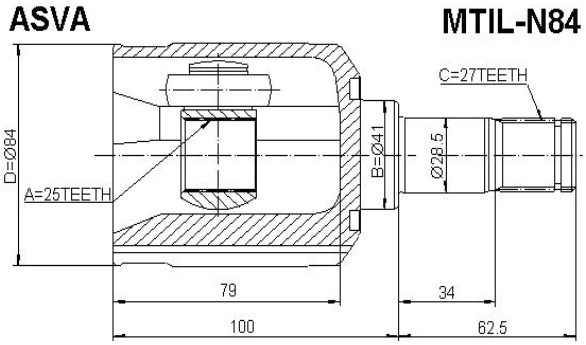

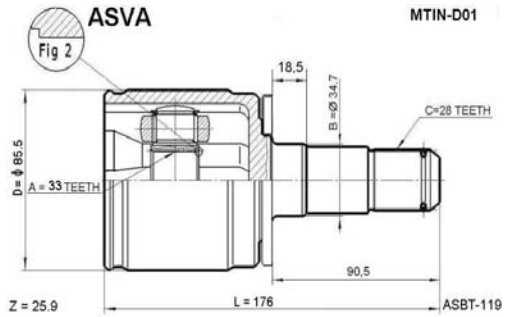

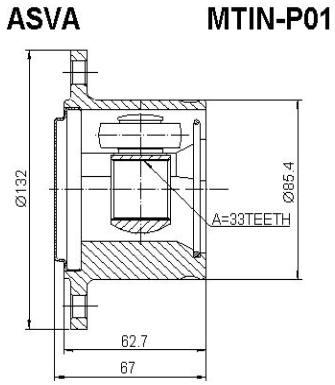

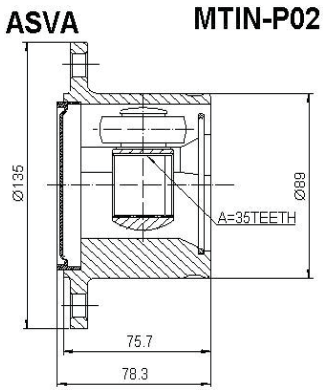

C.V. JOINT INNER/ ШРУС ВНУТРЕННИЙ

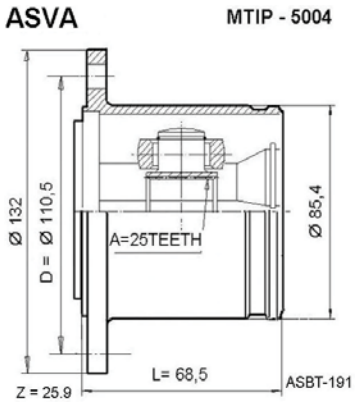

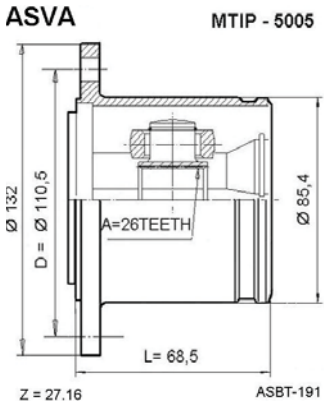

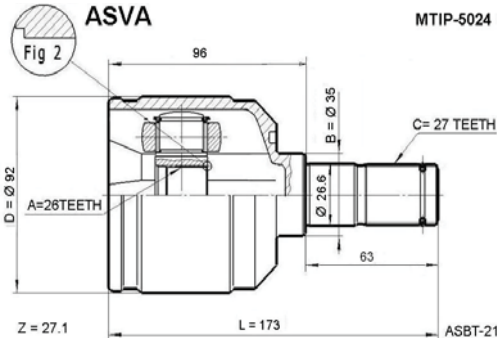

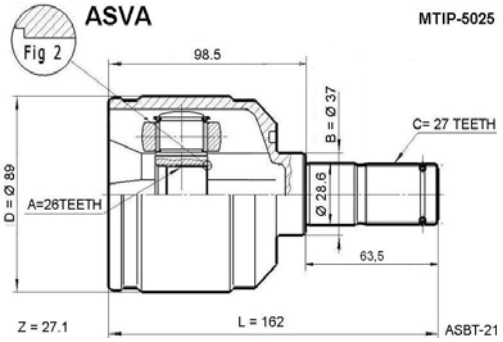

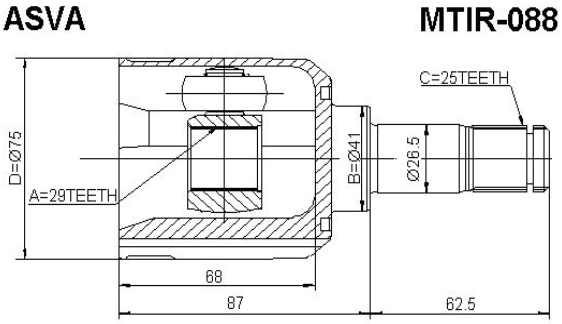

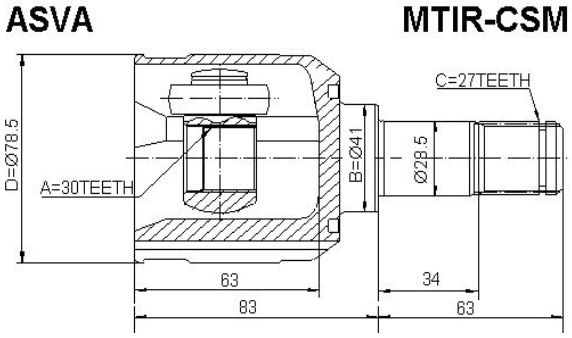

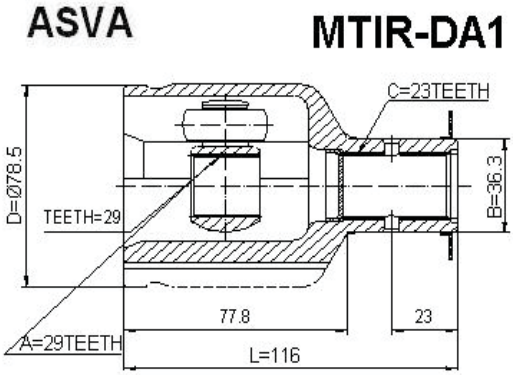

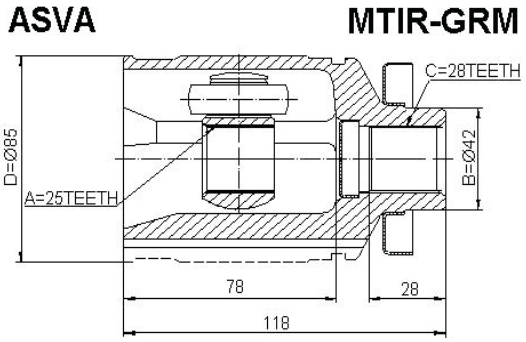

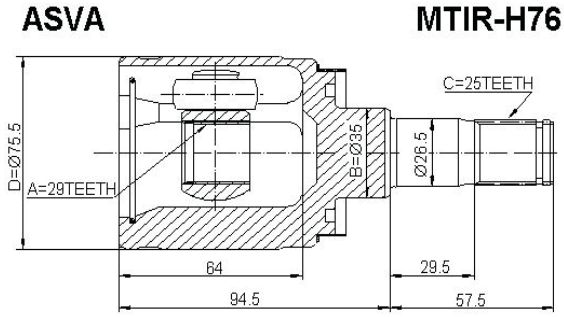

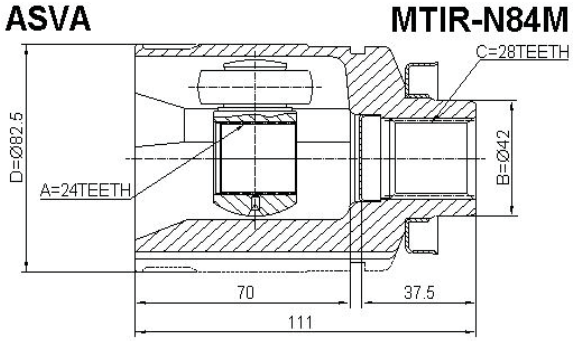

C.V. JOINT INNER/ ШРУС ВНУТРЕННИЙ

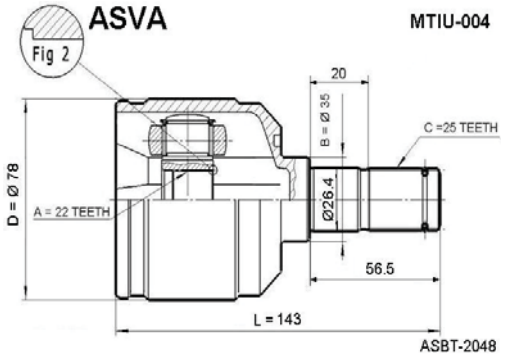

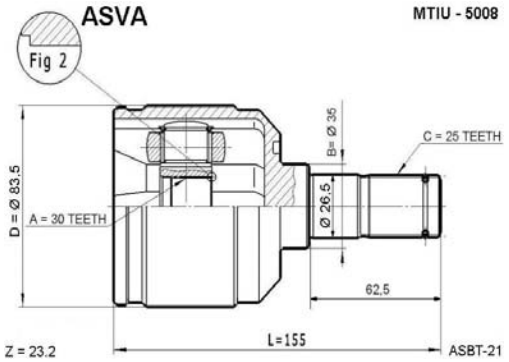

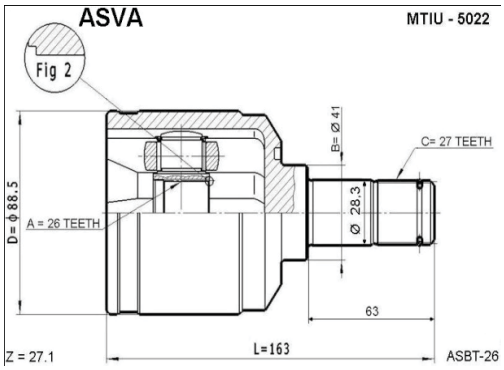

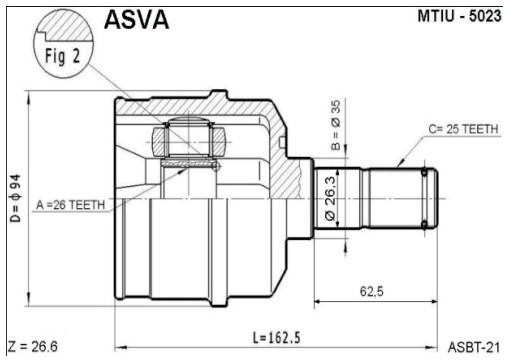

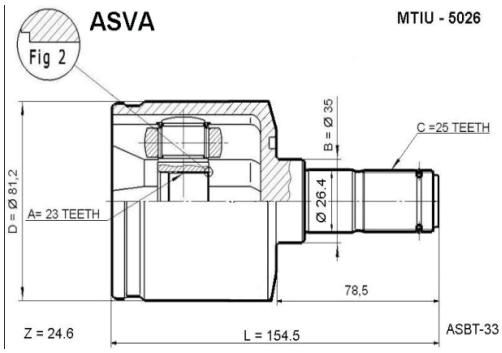

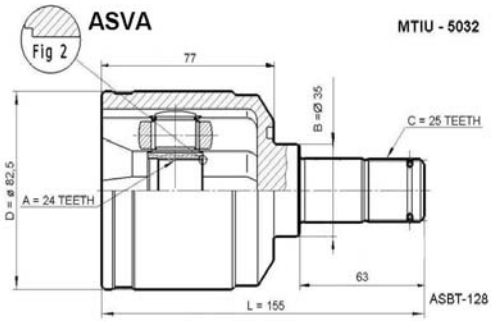

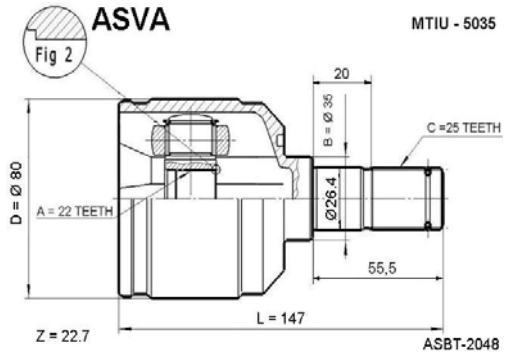

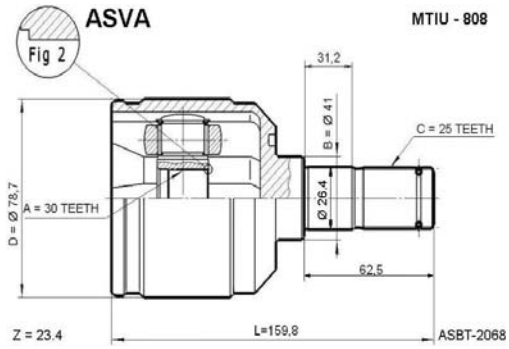

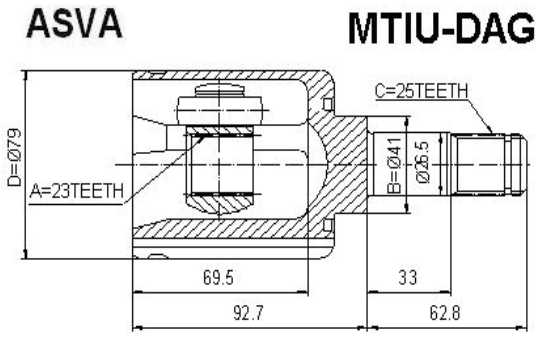

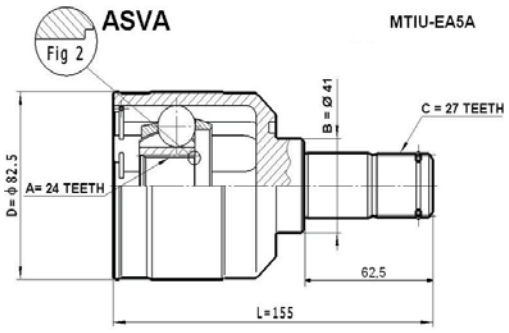

C.V. JOINT INNER/ ШРУС ВНУТРЕННИЙ

ASVA MTIU-N94

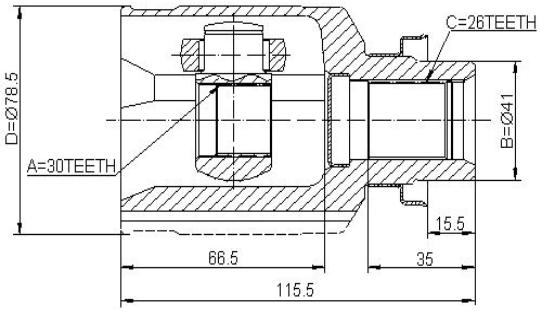

ASVA MTIU-USEA

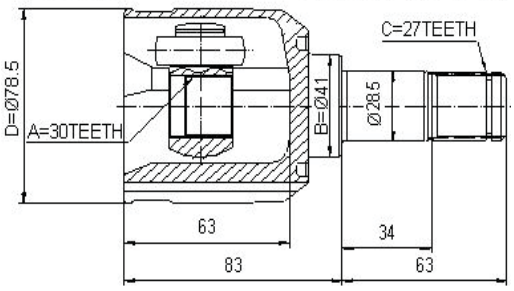

ASVA MZID-5022

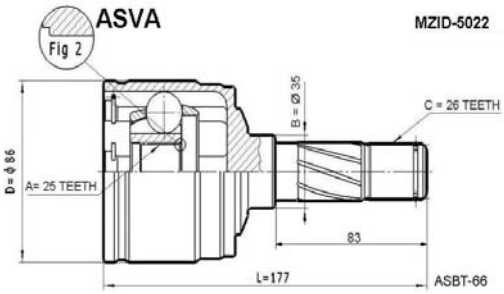

ASVA MZID - 504

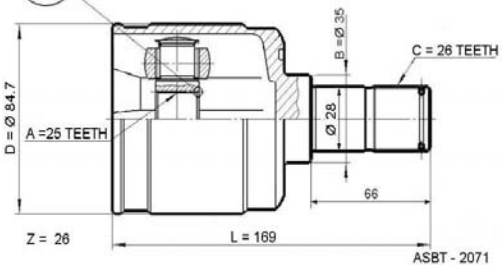

ASVA MZID - 512

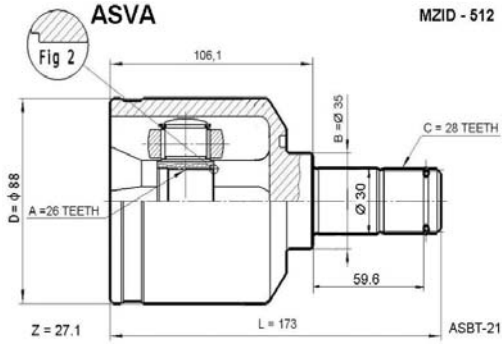

ASVA MZID-554

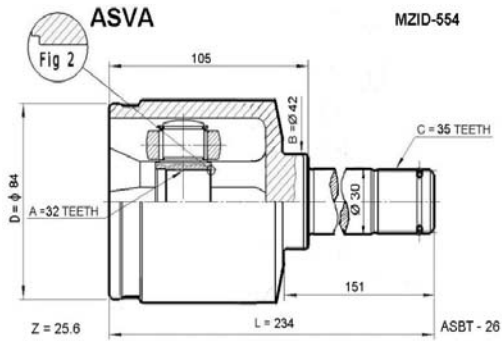

ASVA MZ-IDMT-02

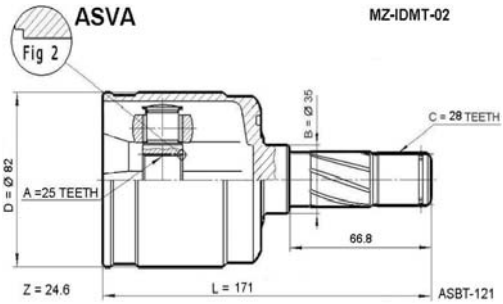

ASVA MZIL-GF

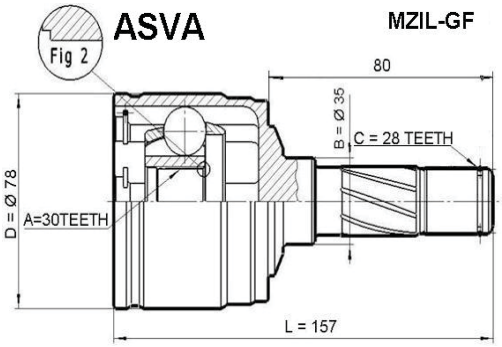

ASVA MZIL-GG

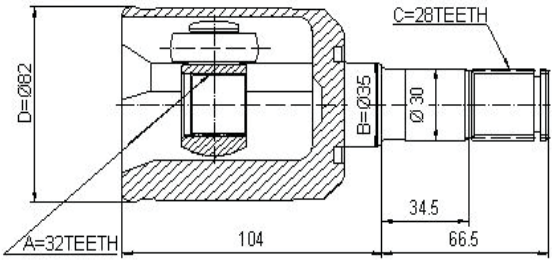

ASVA MZIL-M3

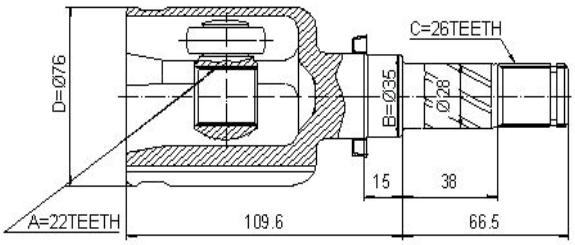

C.V. JOINT INNER/ ШРУС ВНУТРЕННИЙ

ASVA MZIL-M3A2

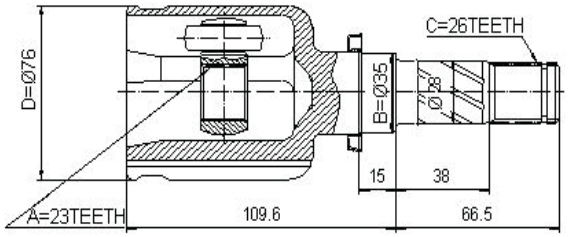

ASVA MZIL-M3M1

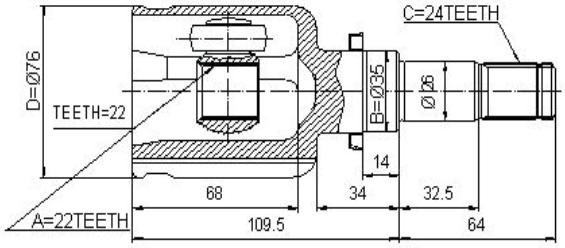

ASVA MZIL-M3M2

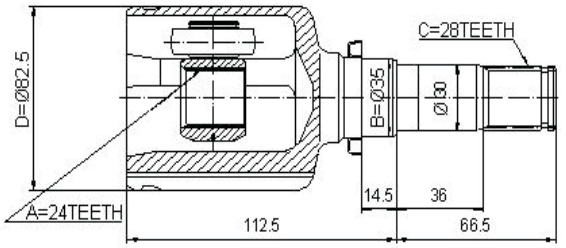

ASVA MZIL-M6A

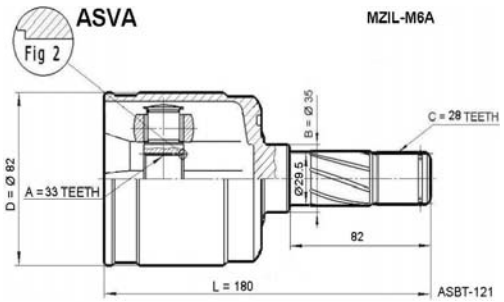

ASVA MZIL-M6A2

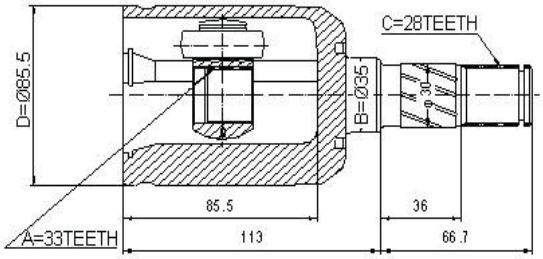

ASVA MZIL-MP1

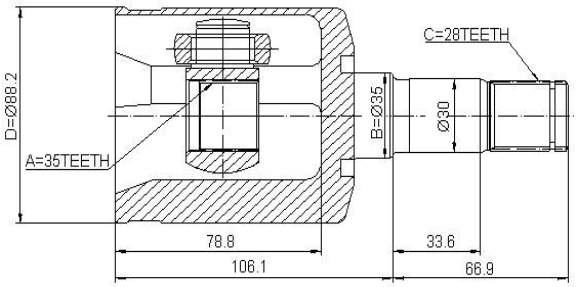

ASVA MZIL-MP2

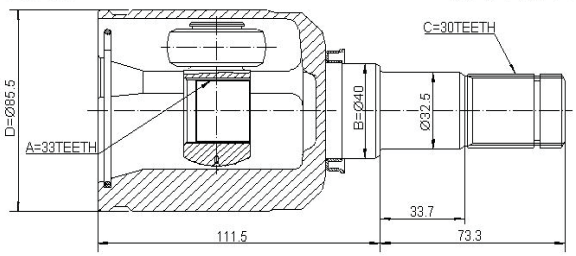

ASVA MZIP - 5021

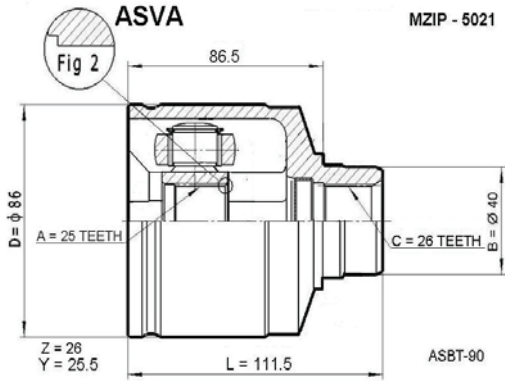

ASVA MZIP-503

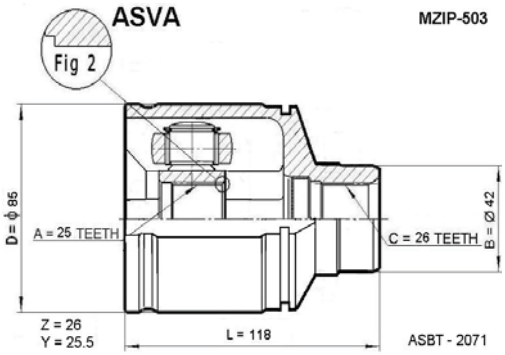

ASVA MZIP - 511

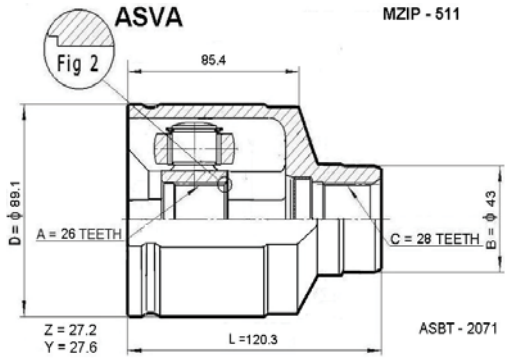

C.V. JOINT INNER/ ШРУС ВНУТРЕННИЙ

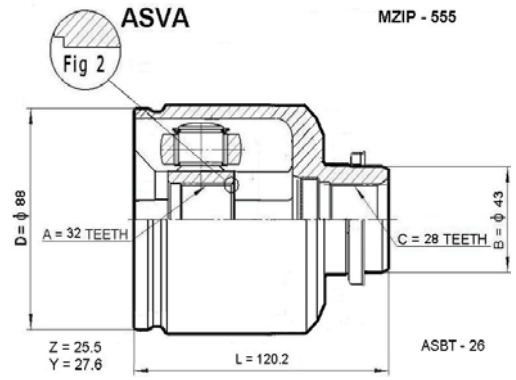

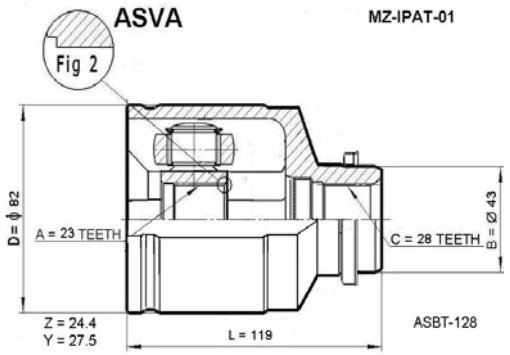

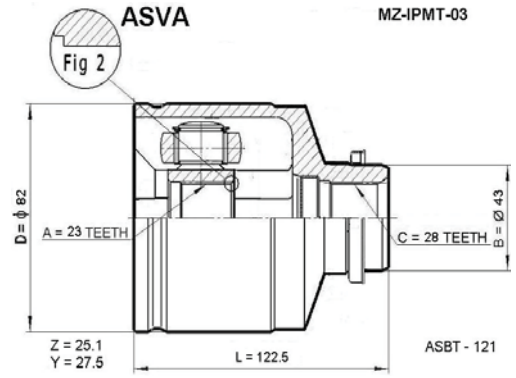

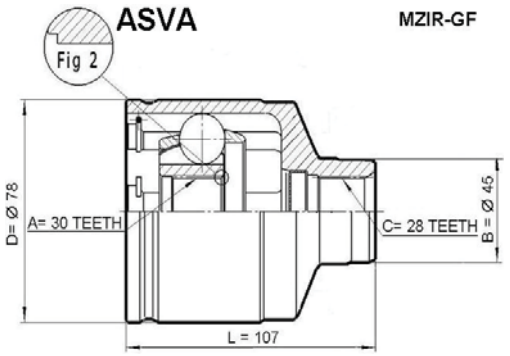

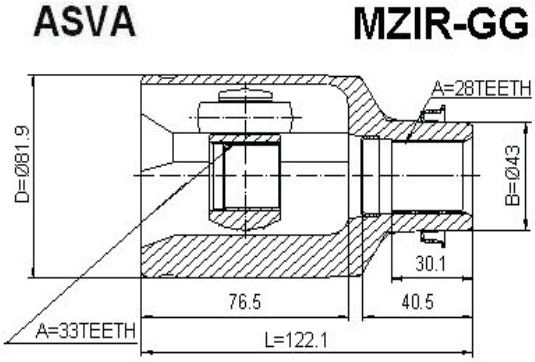

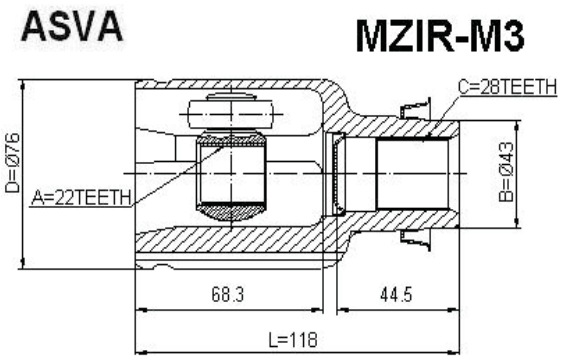

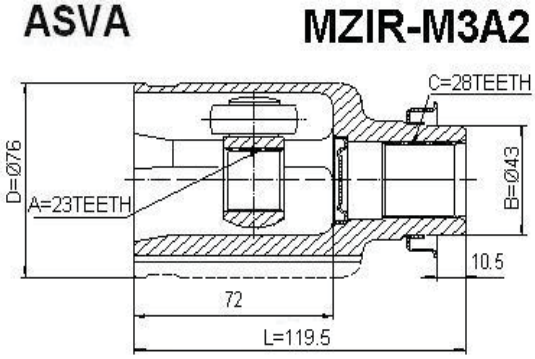

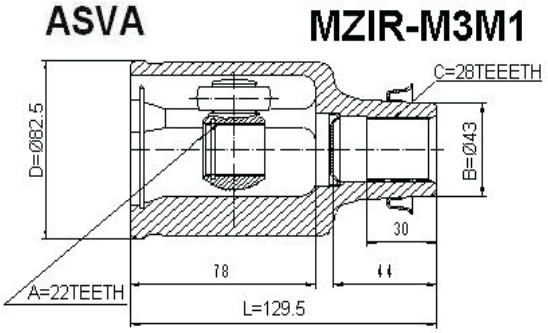

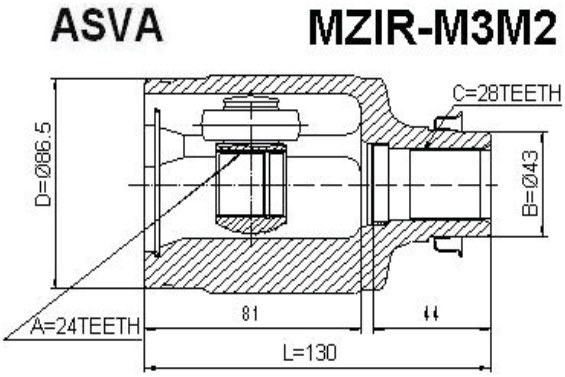

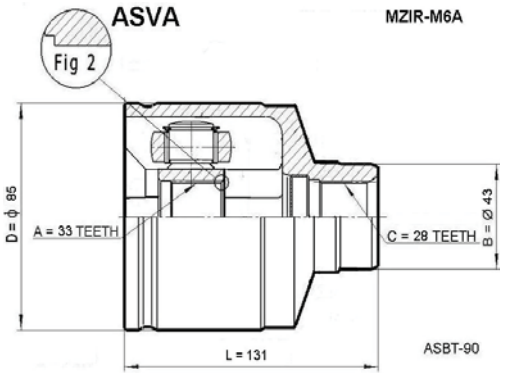

C.V. JOINT INNER/ ШРУС ВНУТРЕННИЙ

ASVA MZIL-M6A2

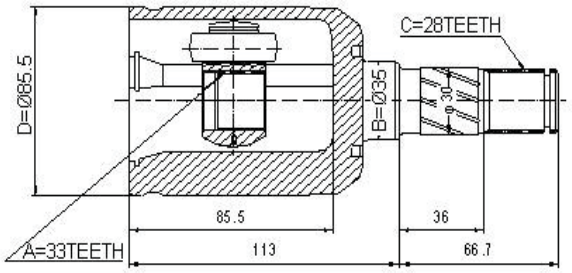

ASVA MZIR-MP1

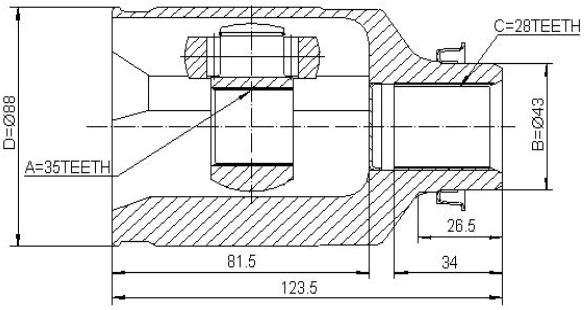

ASVA MZIR-MP2

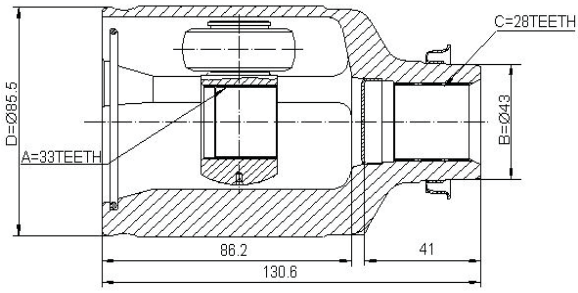

ASVA MZIU-507

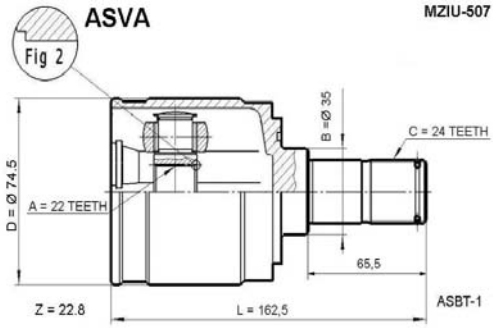

ASVA NSID-5001

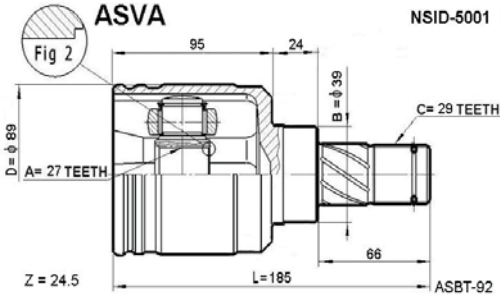

ASVA NSID-5013

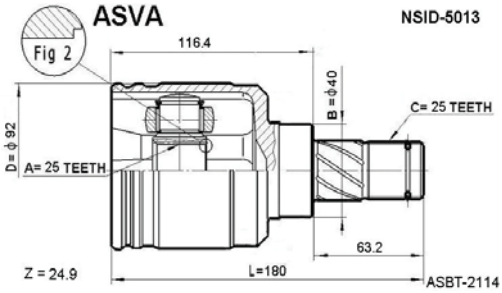

ASVA NSID-TN

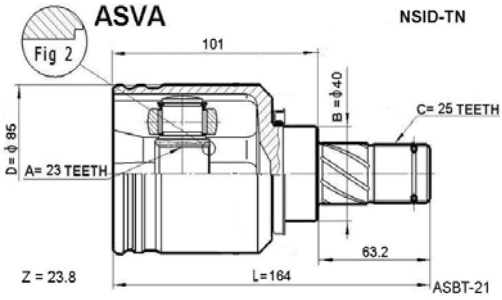

ASVA NSIL-A32

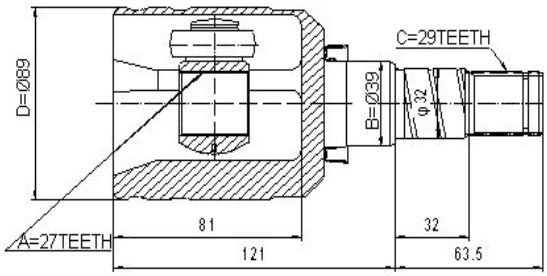

ASVA NSIL-EP20

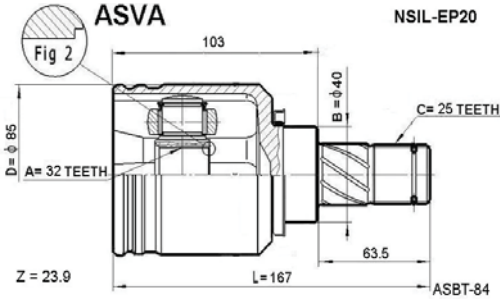

ASVA NSIL-J10

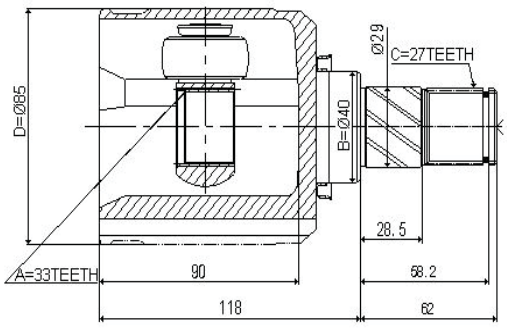

C.V. JOINT INNER/ ШРУС ВНУТРЕННИЙ

ASVA NSIL-J10F

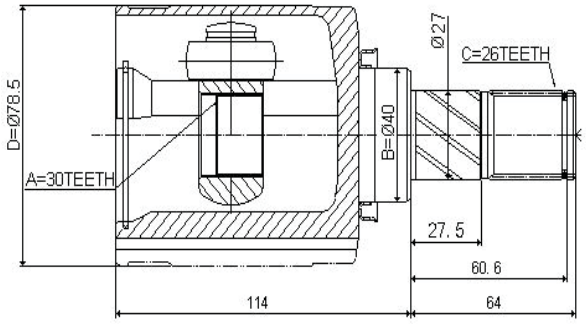

ASVA NSIL-J10W

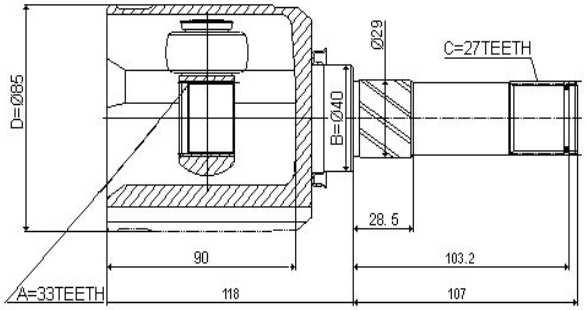

ASVA NSIL-W11

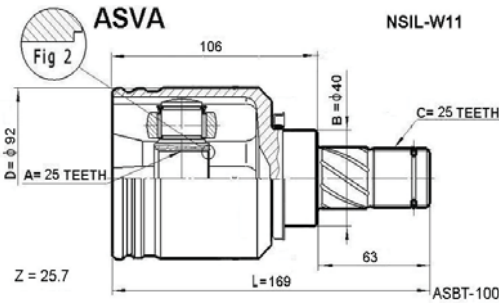

ASVA NSIL-XT

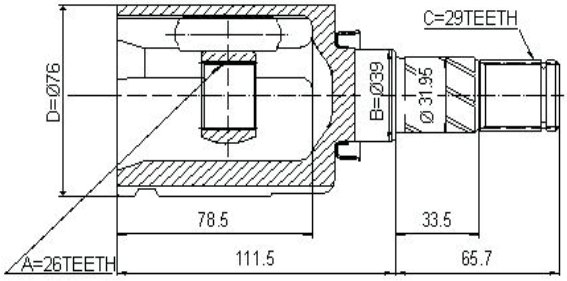

ASVA NSIP-5009

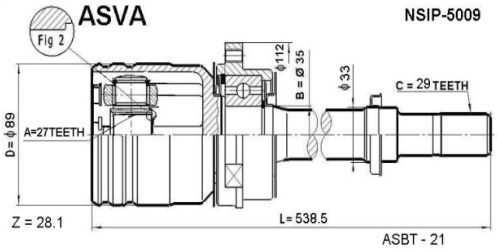

ASVA NSIP-TN

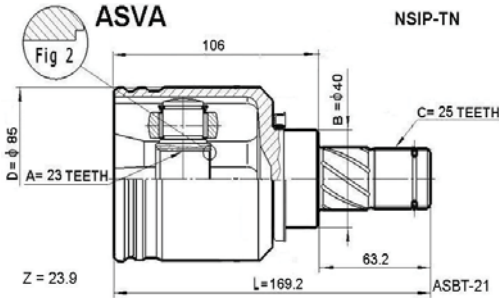

ASVA NSIR-EP20

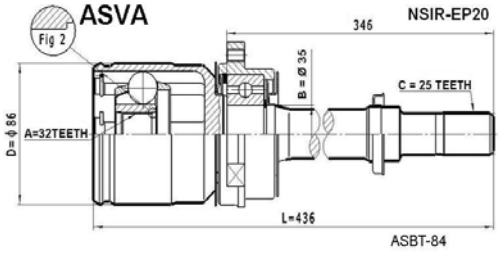

ASVA NSIR-J10

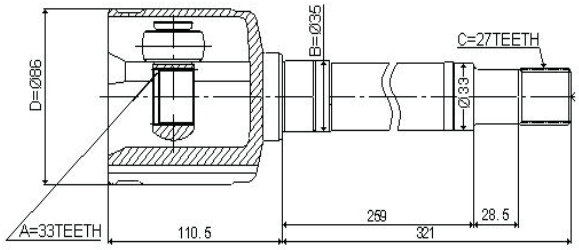

ASVA NSIR-J10F

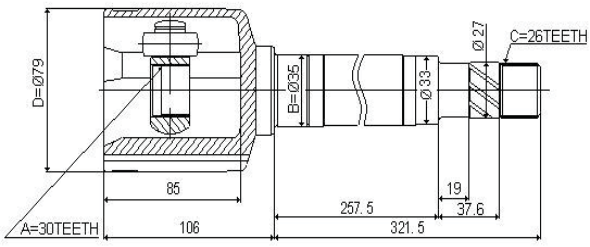

ASVA NSIR-J10W

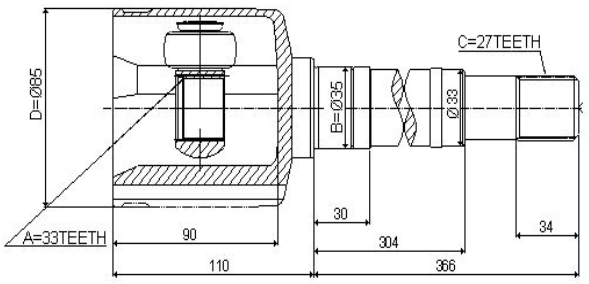

C.V. JOINT INNER/ ШРУС ВНУТРЕННИЙ

ASVA NSIR-XT

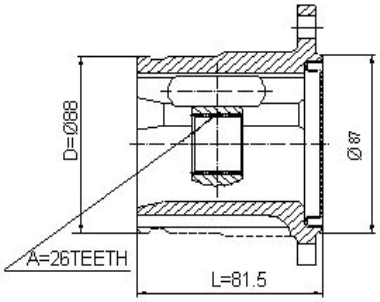

ASVA NSIU-5031

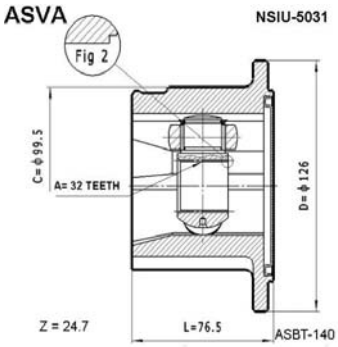

ASVA NSIU-5033

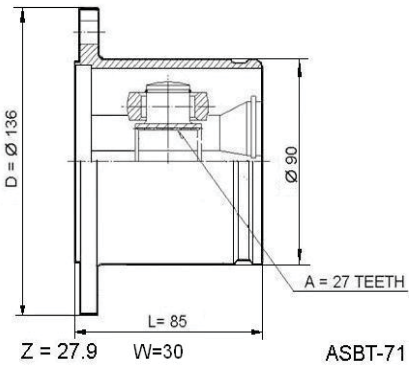

ASVA NSIU-626

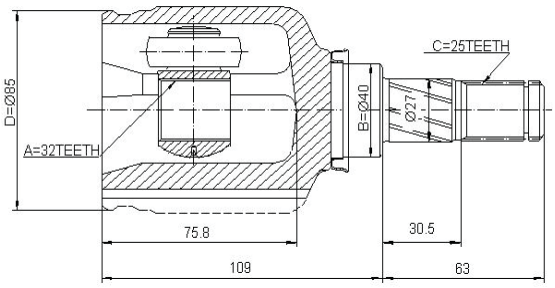

ASVA NSIU-C11X

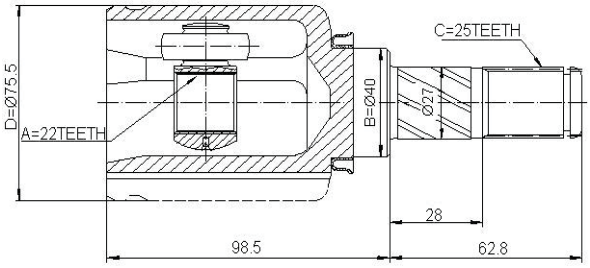

ASVA NSIU - EP16

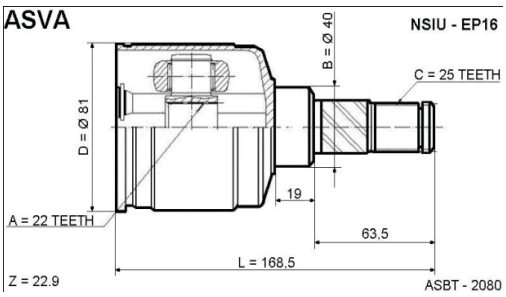

ASVA NSIU-JP16

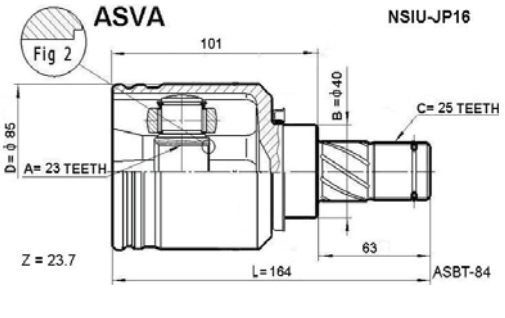

ASVA NSIU-K12

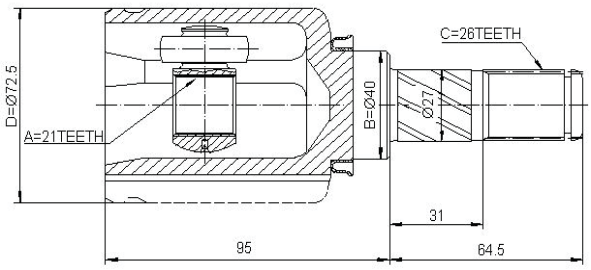

ASVA NSIU-N16

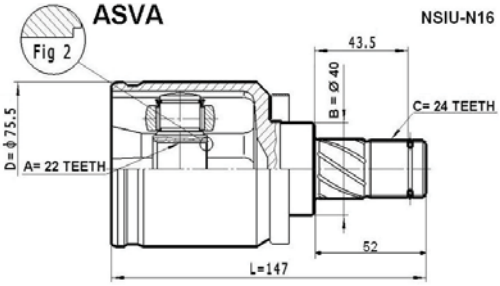

ASVA NSIU-N16B

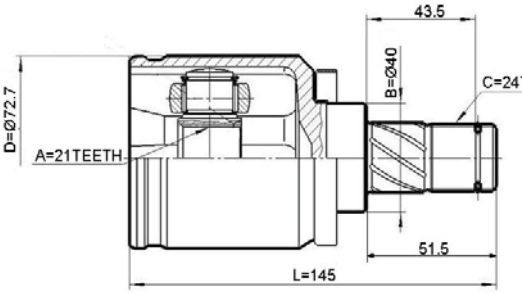

C.V. JOINT INNER/ ШРУС ВНУТРЕННИЙ

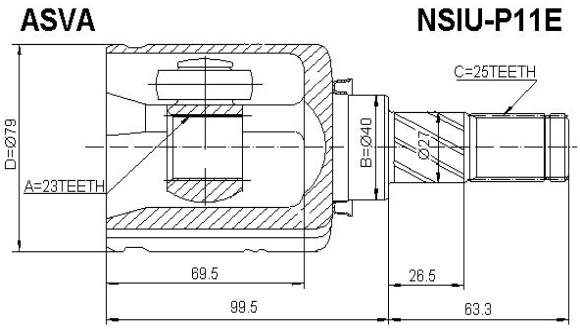

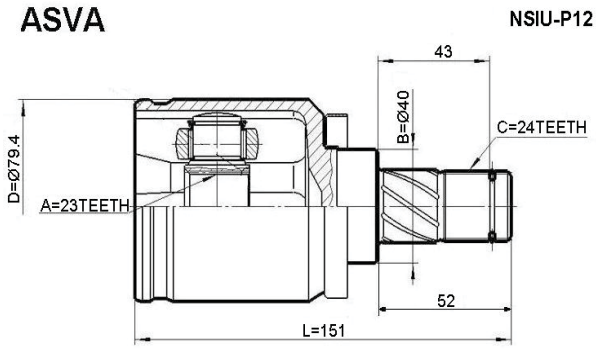

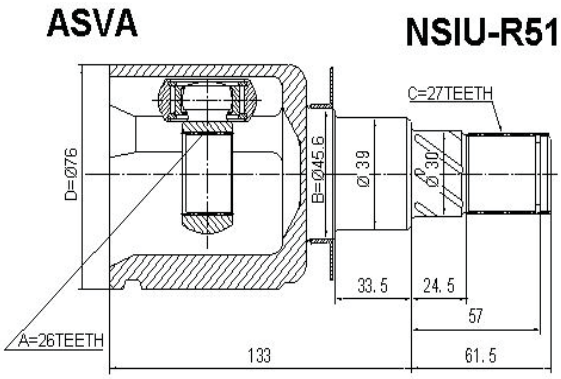

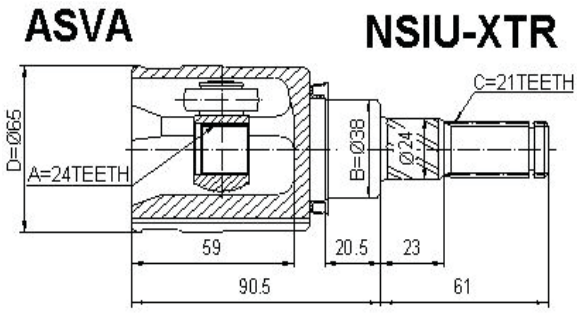

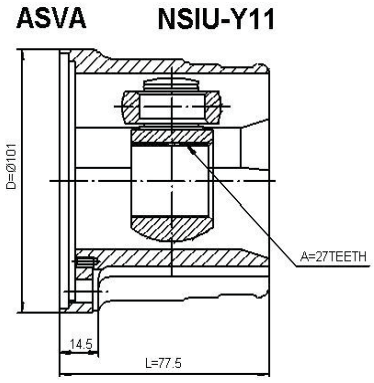

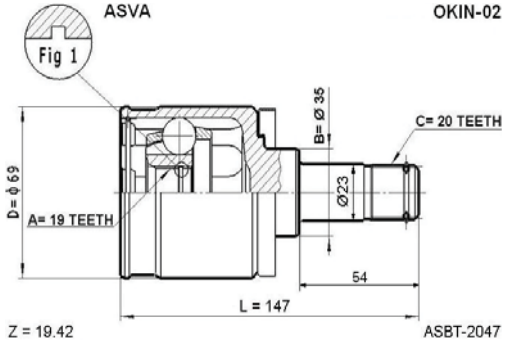

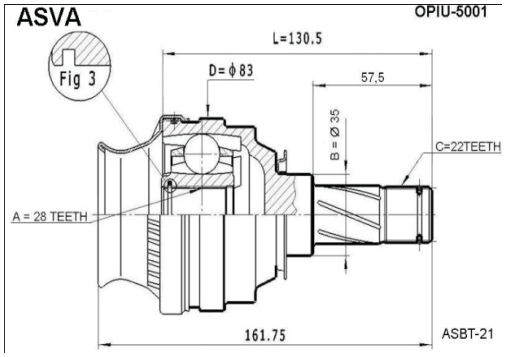

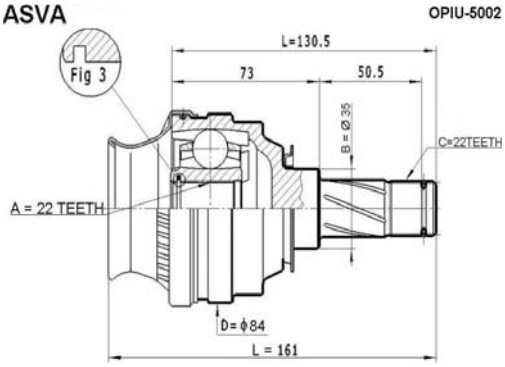

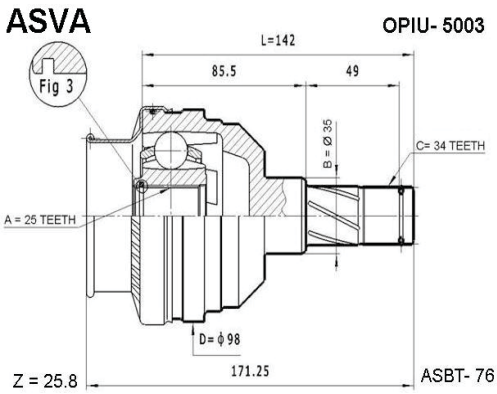

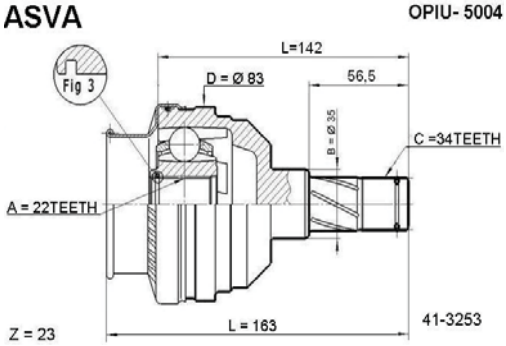

C.V. JOINT INNER/ ШРУС ВНУТРЕННИЙ

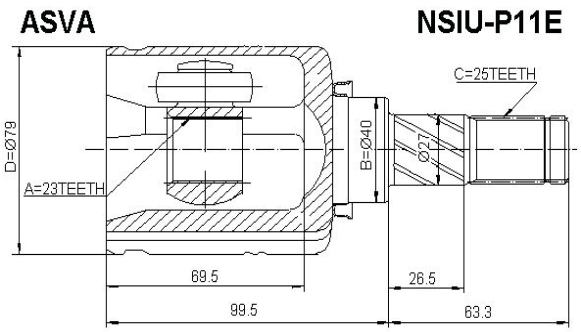

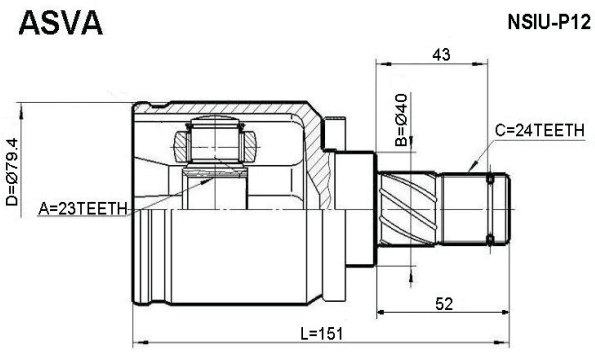

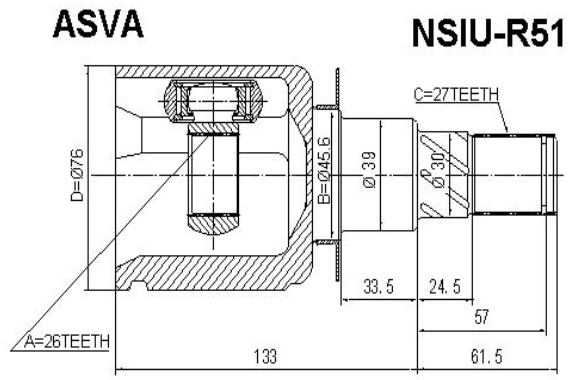

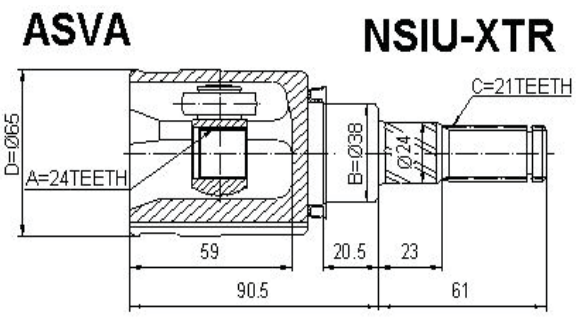

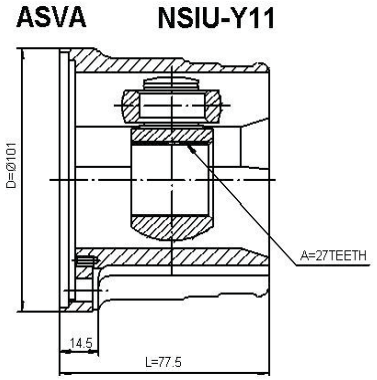

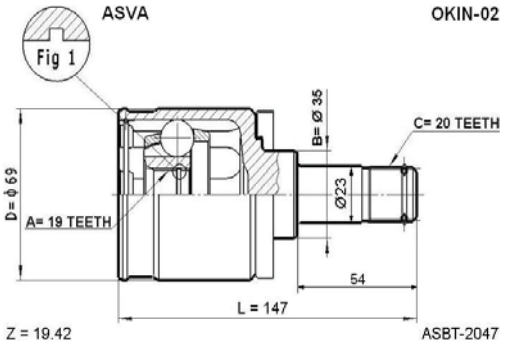

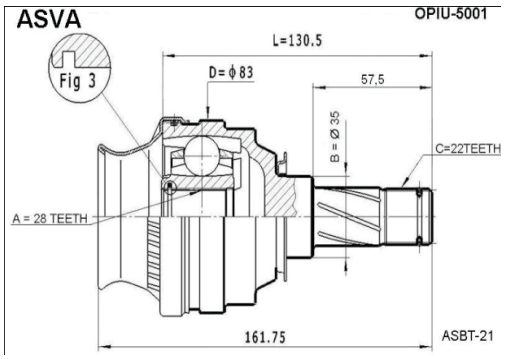

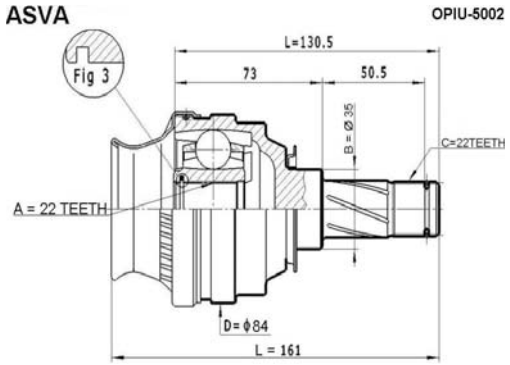

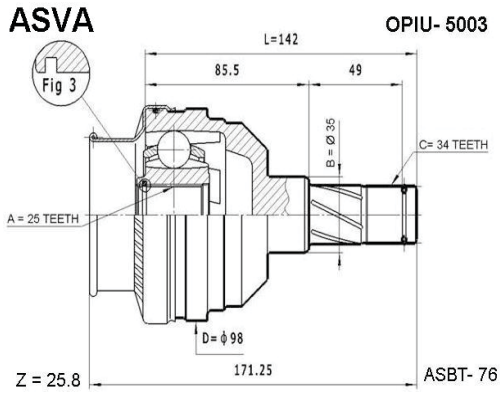

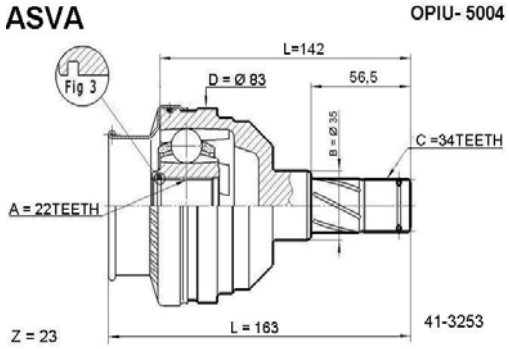

C.V. JOINT INNER/ ШРУС ВНУТРЕННИЙ

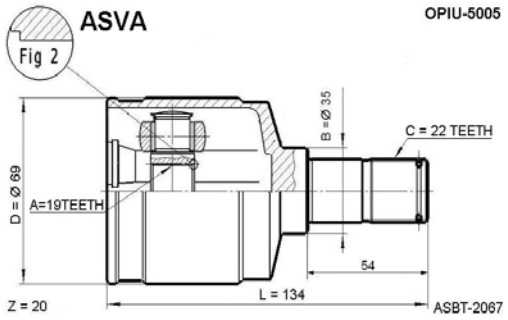

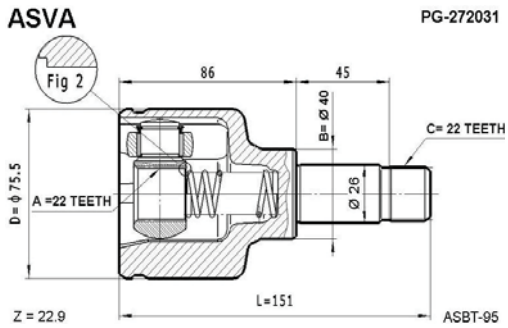

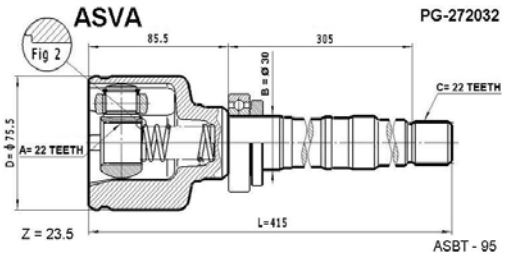

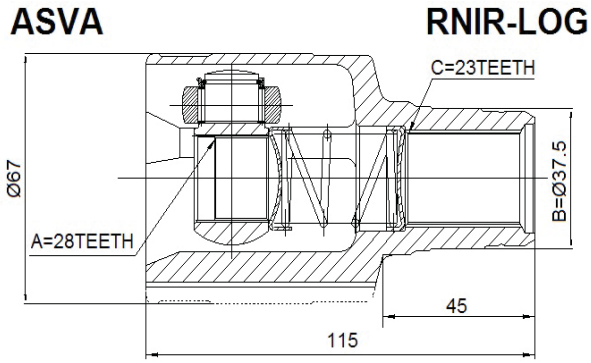

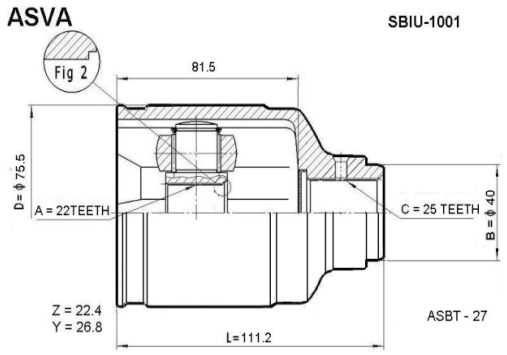

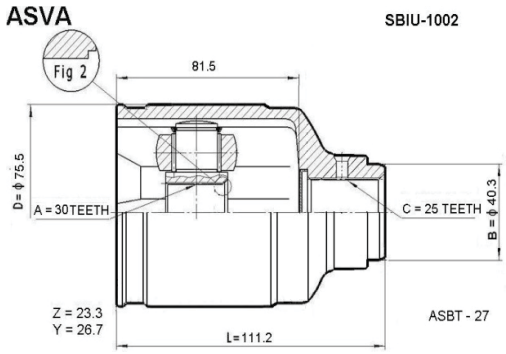

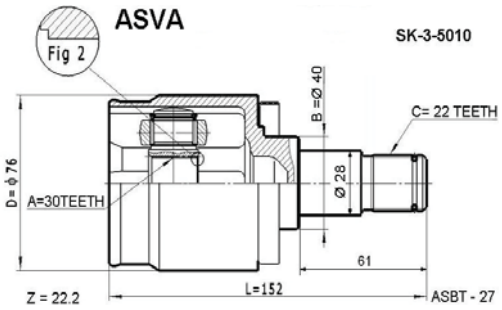

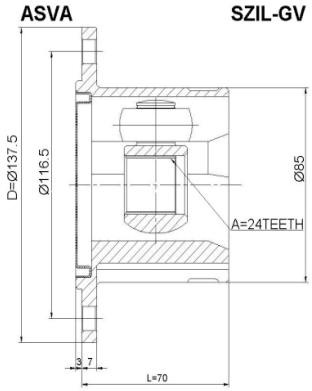

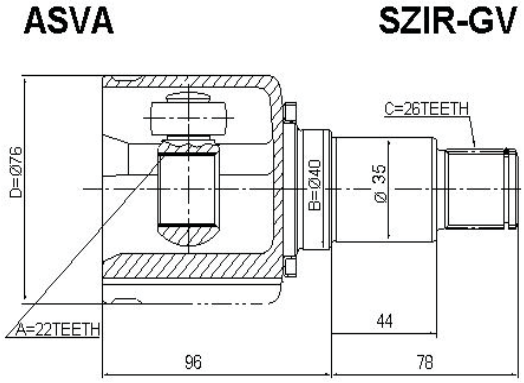

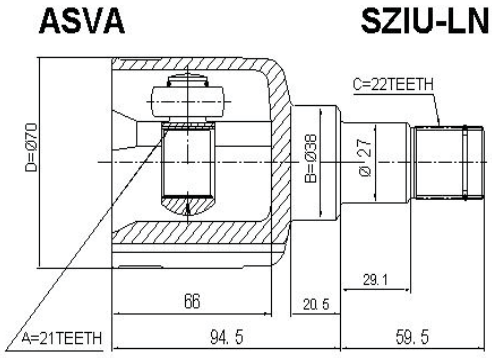

C.V. JOINT INNER/ ШРУС ВНУТРЕННИЙ

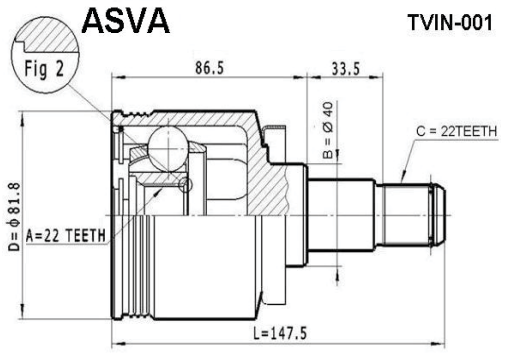

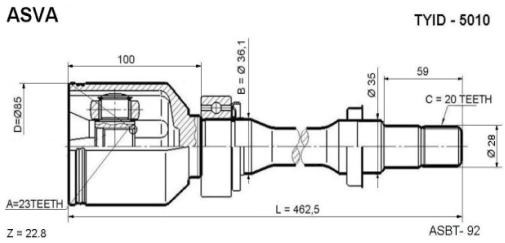

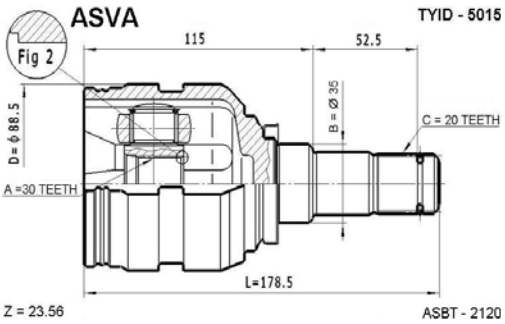

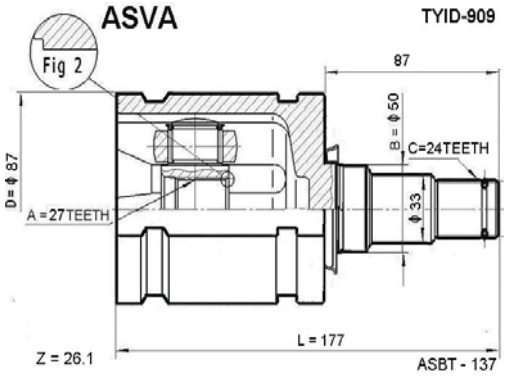

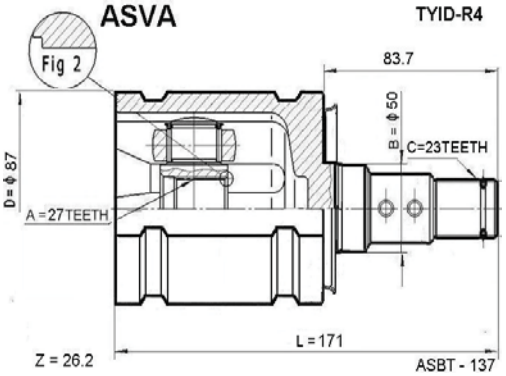

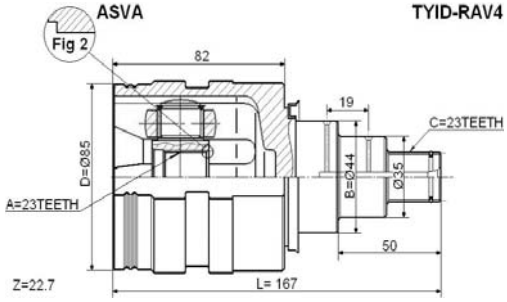

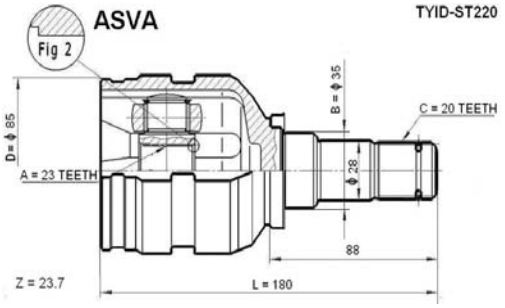

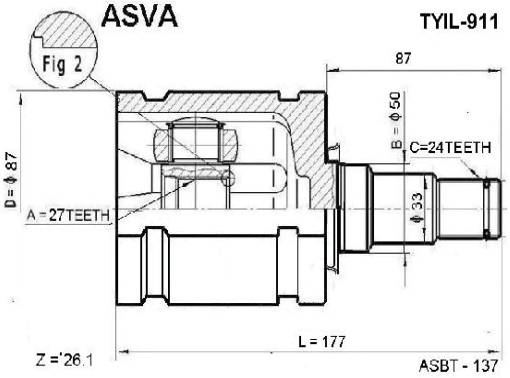

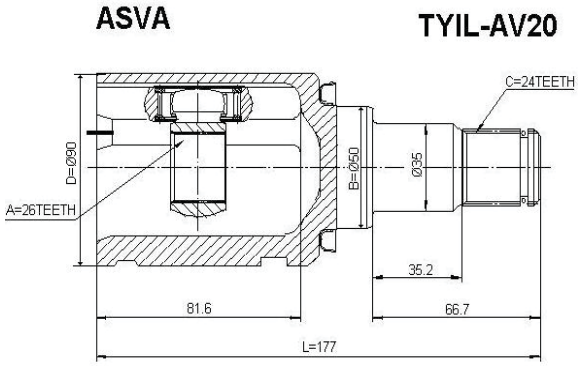

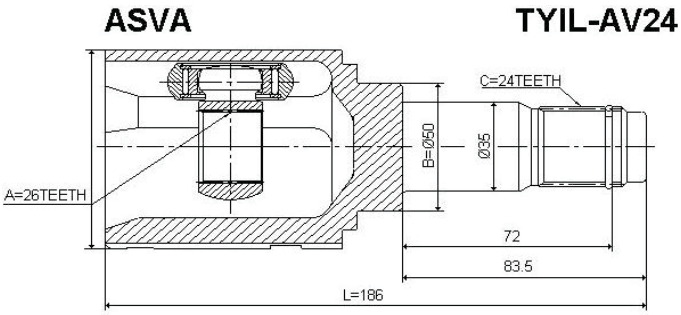

C.V. JOINT INNER/ ШРУС ВНУТРЕННИЙ

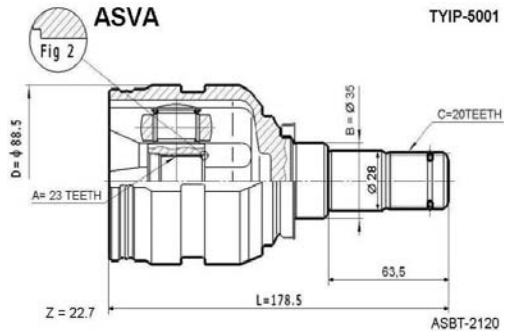

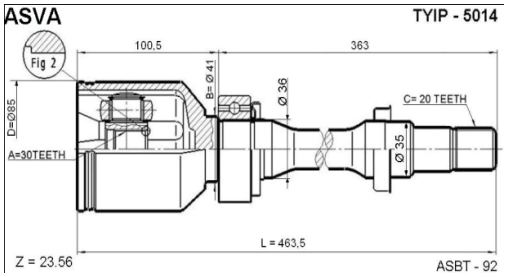

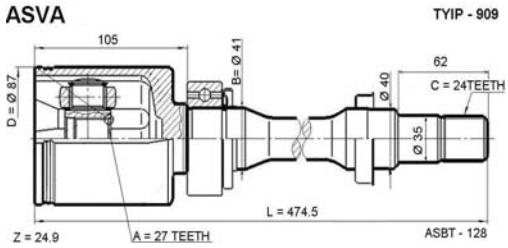

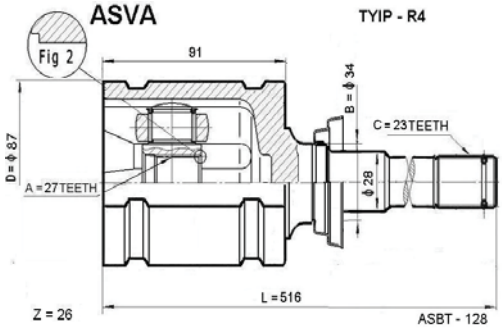

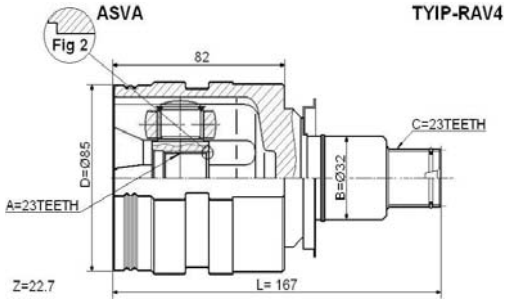

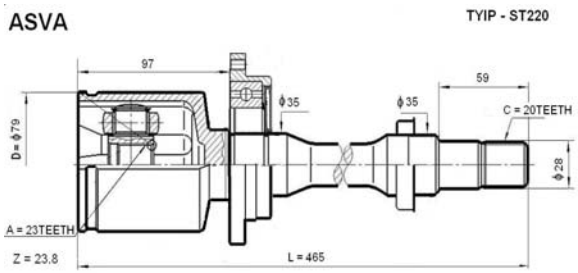

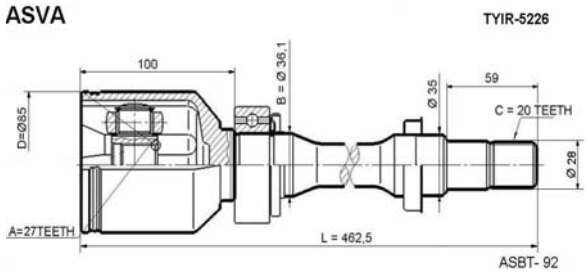

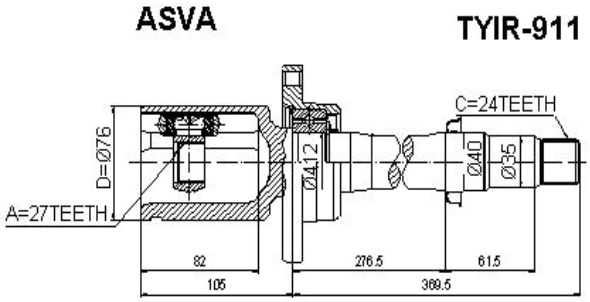

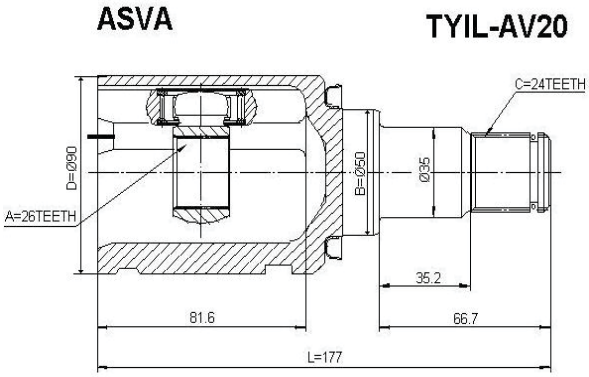

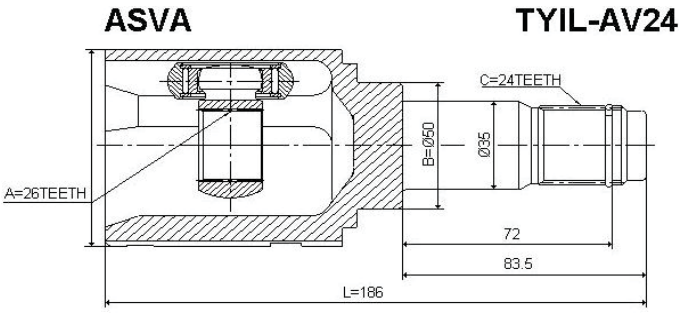

C.V. JOINT INNER/ ШРУС ВНУТРЕННИЙ

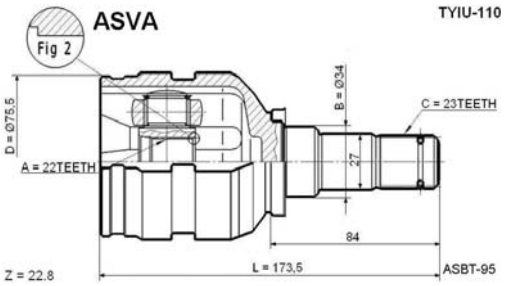

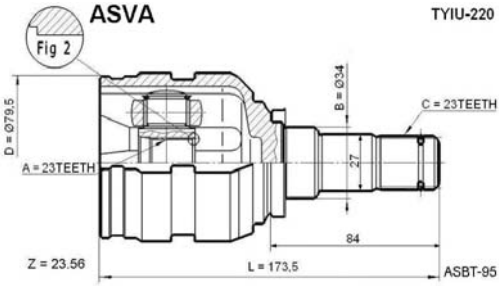

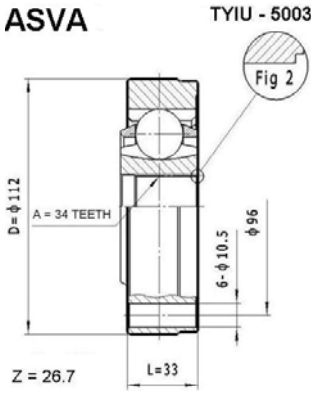

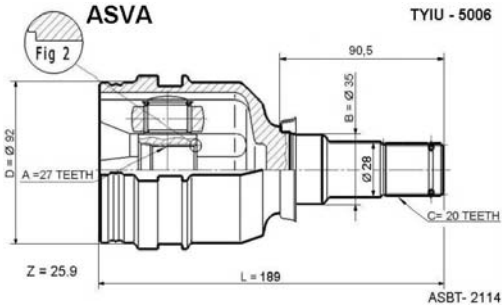

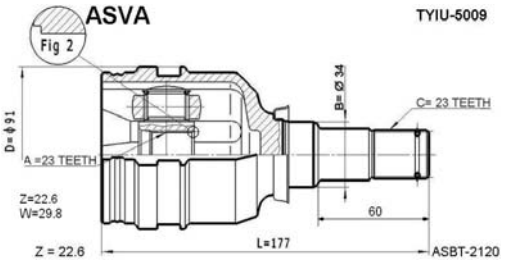

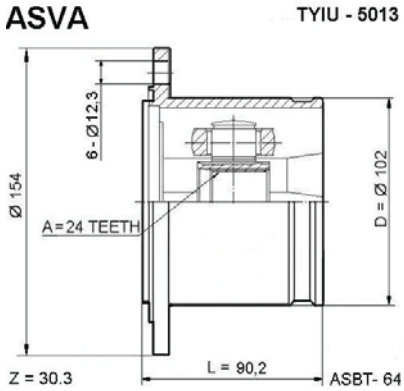

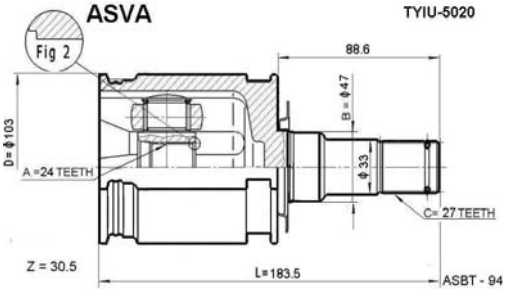

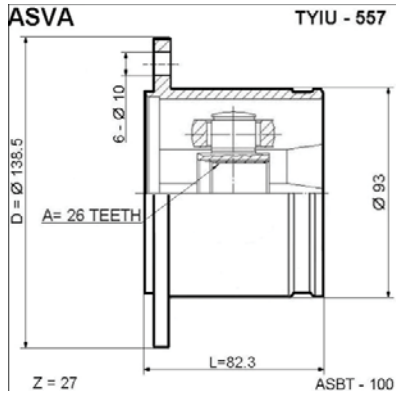

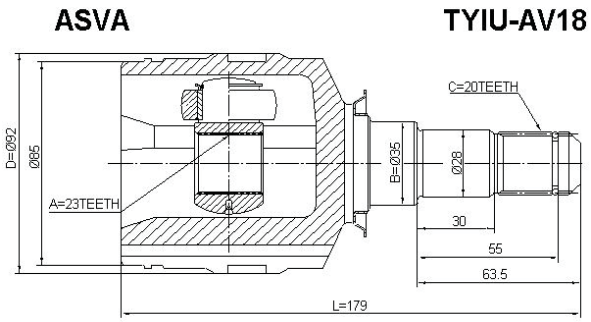

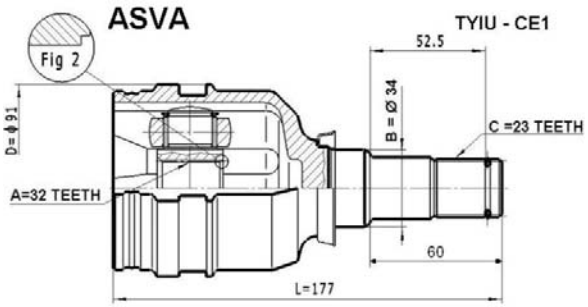

C.V. JOINT INNER/ ШРУС ВНУТРЕННИЙ

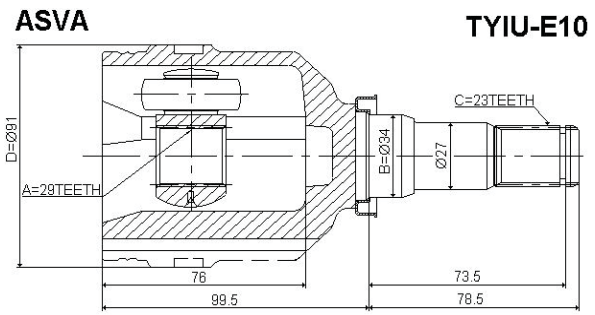

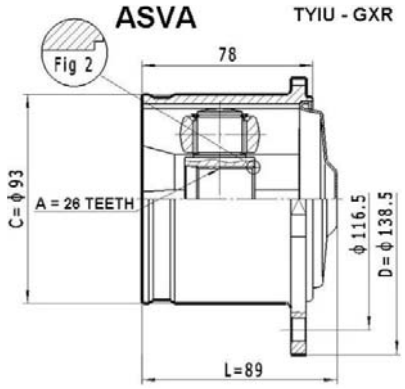

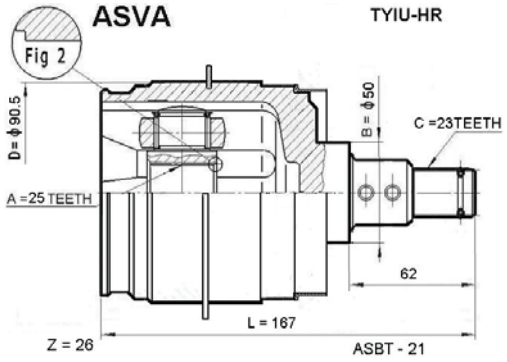

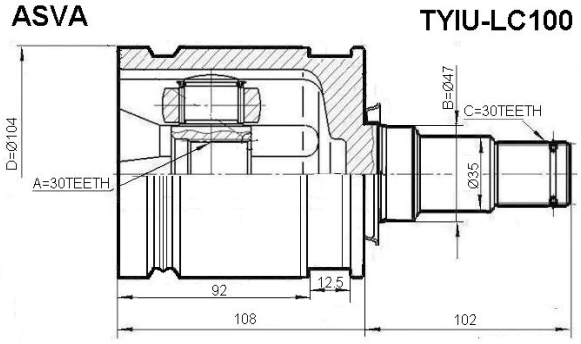

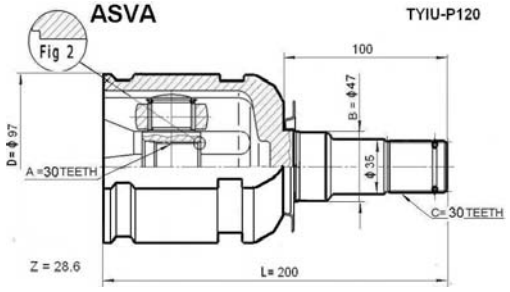

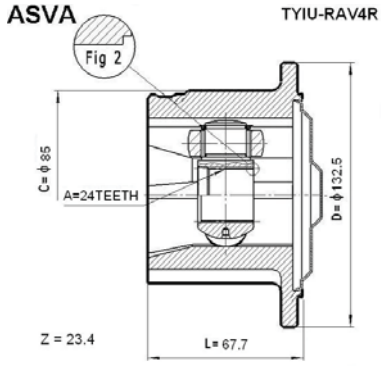

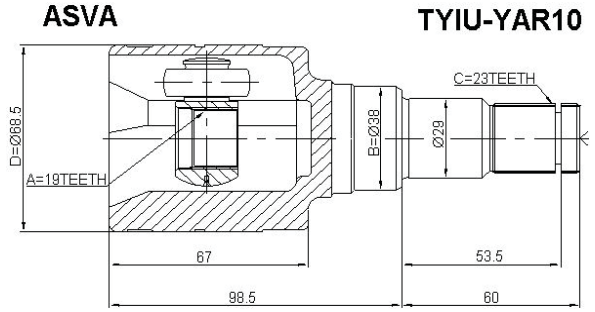

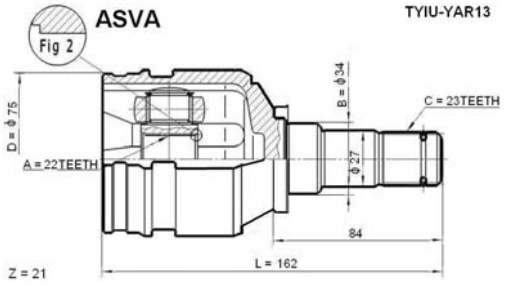

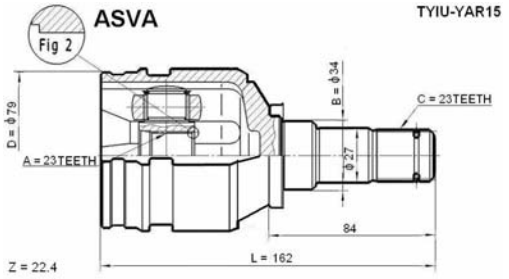

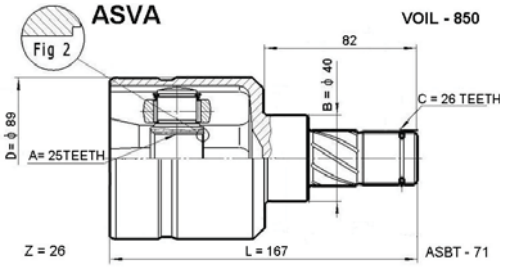

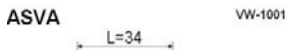

C.V. JOINT INNER/ ШРУС ВНУТРЕННИЙ

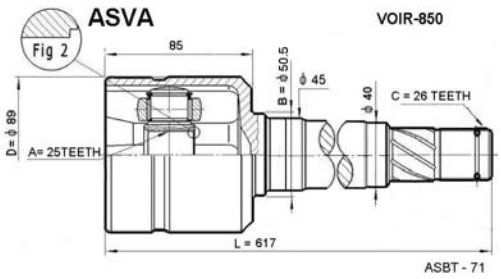

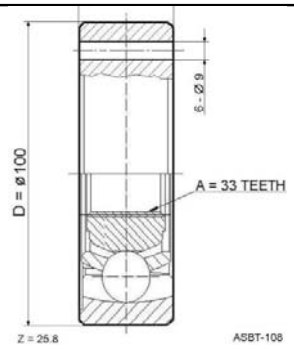

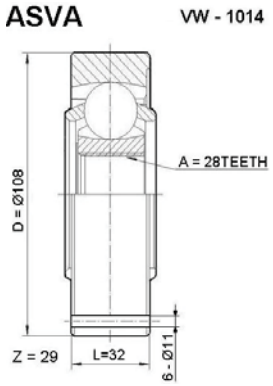

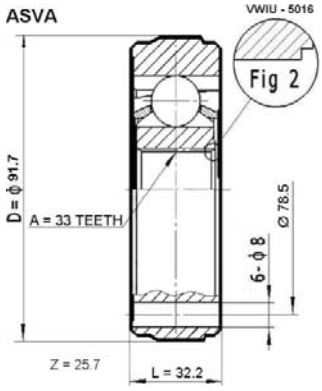

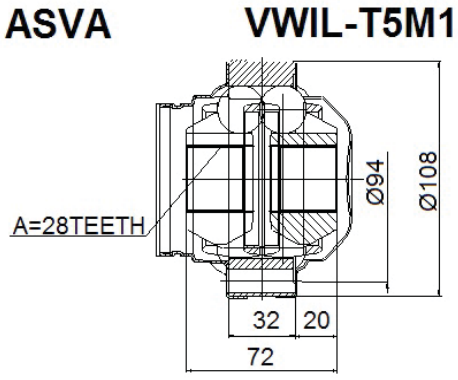

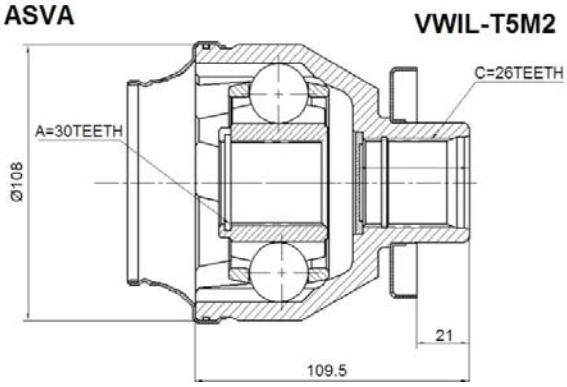

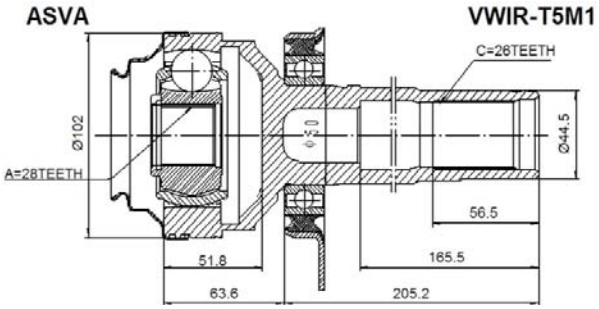

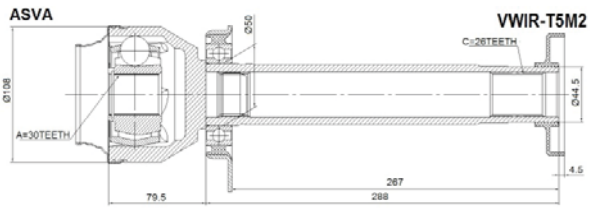

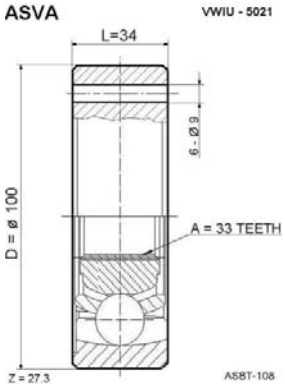

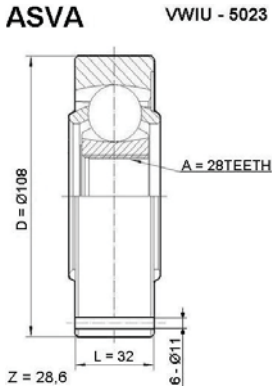

C.V. JOINT INNER/ ШРУС ВНУТРЕННИЙ

ASVA VWIU-B6A1

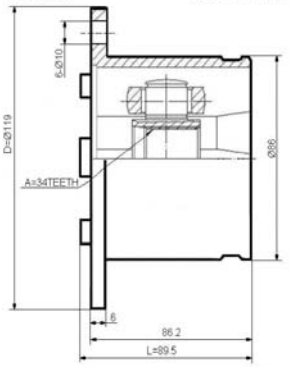

ASVA **VWIU-B6M1**

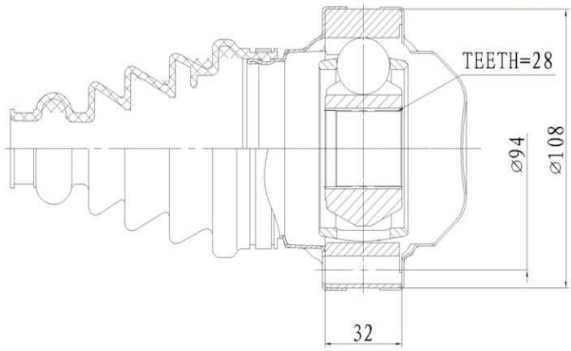

ASVA VWIU-G41

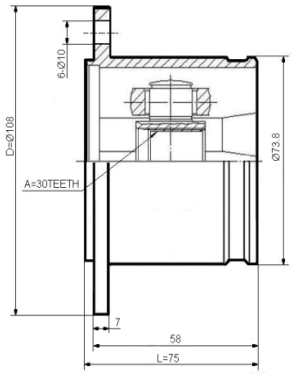

ASVA VWIU-TG

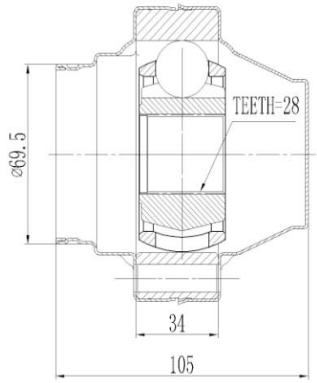

C.V. JOINT INNER/ШРУС ВНУТРЕННИЙ

BOOTS / Пыльники

BOOTS / Пыльники

ASBT-31

ASBT-33

ASBT-46

ASBT-64

ASBT-66

ASBT-70

ASBT-71

ASBT-72

ASBT-73

ASBT-76

ASBT-77

ASBT-80

ASBT-84

ASBT-89

ASBT-90

BOOTS / Пыльники

ASBT-91

TRIPOD

ASBT-92

ASBT-93

TRIPOD

ASBT-94

TRIPOD

ASBT-95

TRIPOD

ASBT-98

ASBT-99

ASBT-100

ASBT-101

ASBT-105

ASBT-106

TRIPOD

ASBT-107

TRIPOD

ASBT-108

ASBT-110

ASBT-112

BOOTS / Пыльники

ASBT-115

ASBT-116

ASBT-119

ASBT-121

ASBT-122

ASBT-127

ASBT-128

TRIPOD

ASBT-129

TRIPOD

ASBT-132

TRIPOD

ASBT-133

TRIPOD

ASBT-135

ASBT-136

ASBT-137

TRIPOD

ASBT-138

ASBT-139